RevNo	Revision note	Date	Signature	Checked

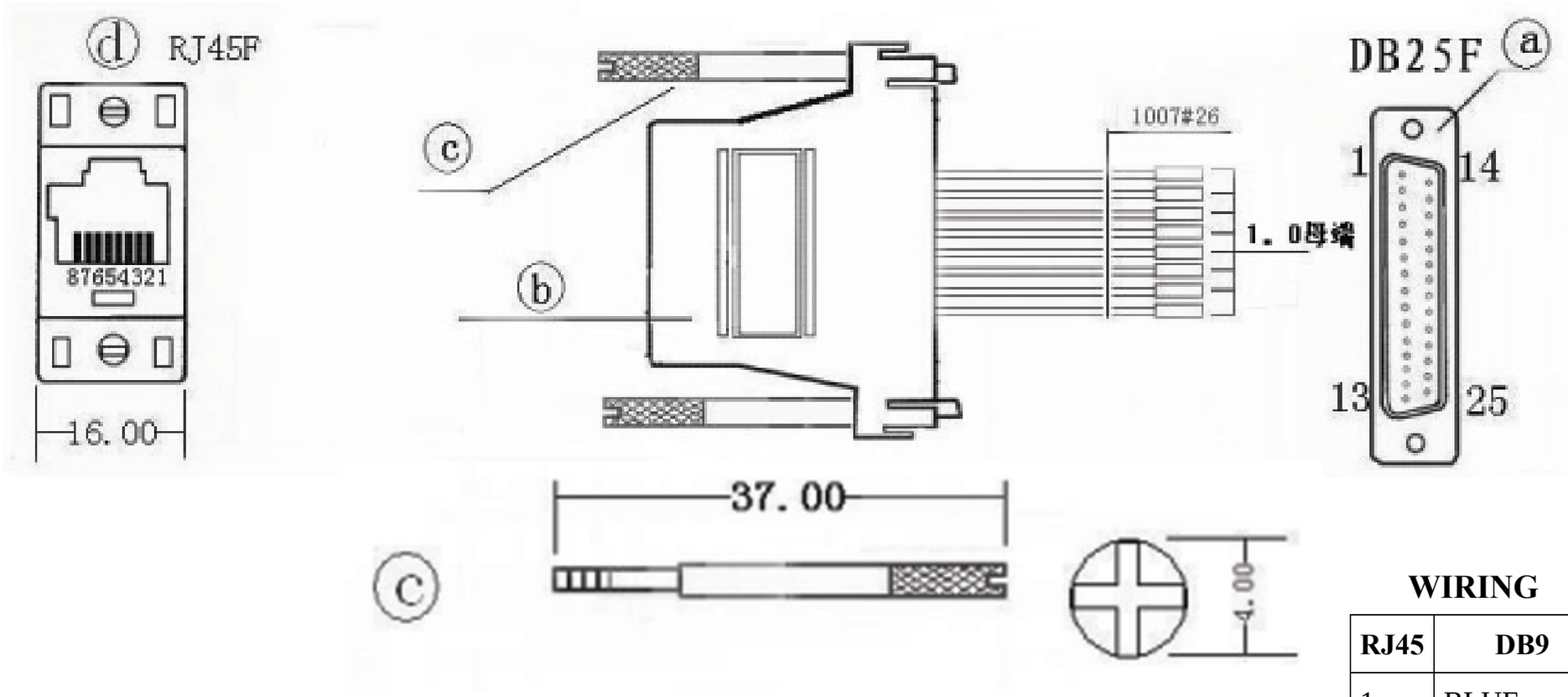

WIRING

RJ45	DB9
1	BLUE
2	ORANGE
3	BLACK
4	RED
5	GREEN
6	YELLOW
7	BROWN
8	WHITE

MATERIAL (ROHS COMPLIANT):

a. CONNECTOR: DB25 F BLACK INSULATION, ROHS
b. DB25 TO RJ45 HOUSING, BEIGE OR GREY COLOR
c. SCREW: UNC #4-40 / 37.00MM NICKEL PLATED
d. CONNECTOR: RJ45 FEMALE / 8P8C

ELECTRICAL:

1. 100% OPEN, SHORT AND MIS-WIRING TEST
2. HI-POT: DC 300V 10M Ohm/MIN
3. CONTACT RESISTANCE: 5 OHM (MAX.)

Itemref	Quantity	Title/Name, designation, material, dimension etc		Article No./Reference	
Designed by	Checked by	Approved by - date	File name MODULAR	Date	Scale FREE
			22 2635		
			Modular DB25 F / RJ45	Edition 1	Sheet 1/1