CRIMSON AV MOUNTING SOLUTIONS

SyncPro™ Universal Projector Mount

Featuring precision hand installation adjustment

JR3XL

Simply the Easiest Projector Mount to Install and Align!

Pitch Adjustment
+-8º

Roll Adjustment
+-15º

Yaw Adjustment
+-360º

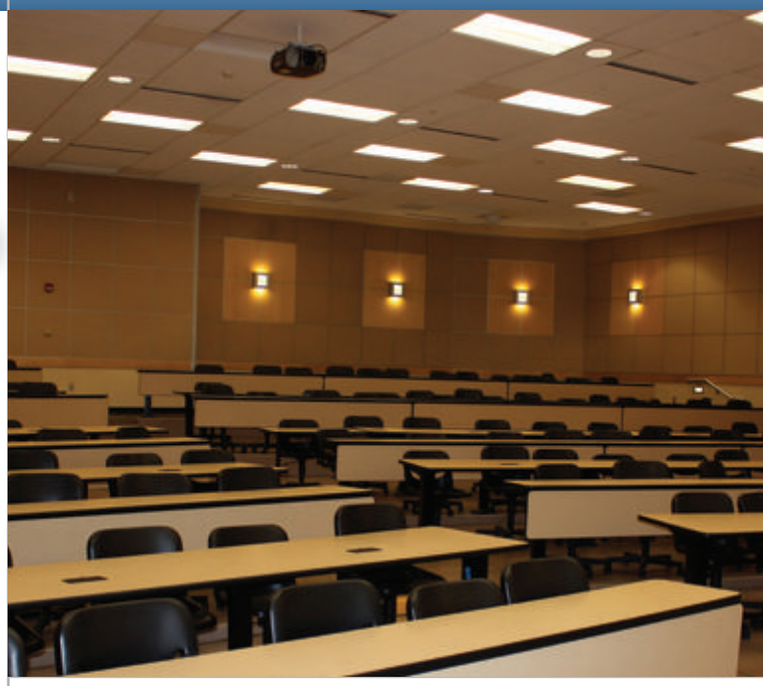

Scan for Video:

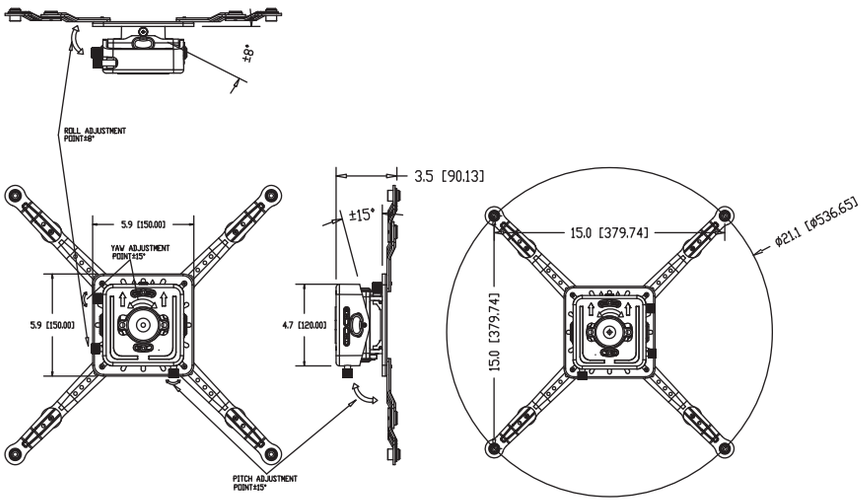

This Rolls Royce of projector mounts, is simply the easiest to install and also, the most precisely adjustable, without the use of tools. Heavy duty design makes this unit ideal for larger projectors and those with a lens that is off-center.

Load:	70lb
Pitch:	+-15°
Roll:	+-8°
Yaw:	360°
Diameter:	536.6mm
Rotation:	360°
Micro Adjust:	Yes

Installation

Installs to any structure with 1.5" NTP thread. Simply rotate the large easy to grip knobs to make all the necessary adjustments during installation. Crimson lead screw adjustment mechanism is unique and precise.

Universal

Universal Design fits hole patterns up to 536.6MM diameter. Additional legs expand the range to cover any large mounting hole pattern.

Quick Release

Quick release allows easy removal for bulb replacement without loosing picture adjustments.

SATISFACTION GUARANTEE 100% SATISFACTION GUARANTEE