| RevNo | Revision note | Date | Signature | Checked |
|---|---|---|---|---|

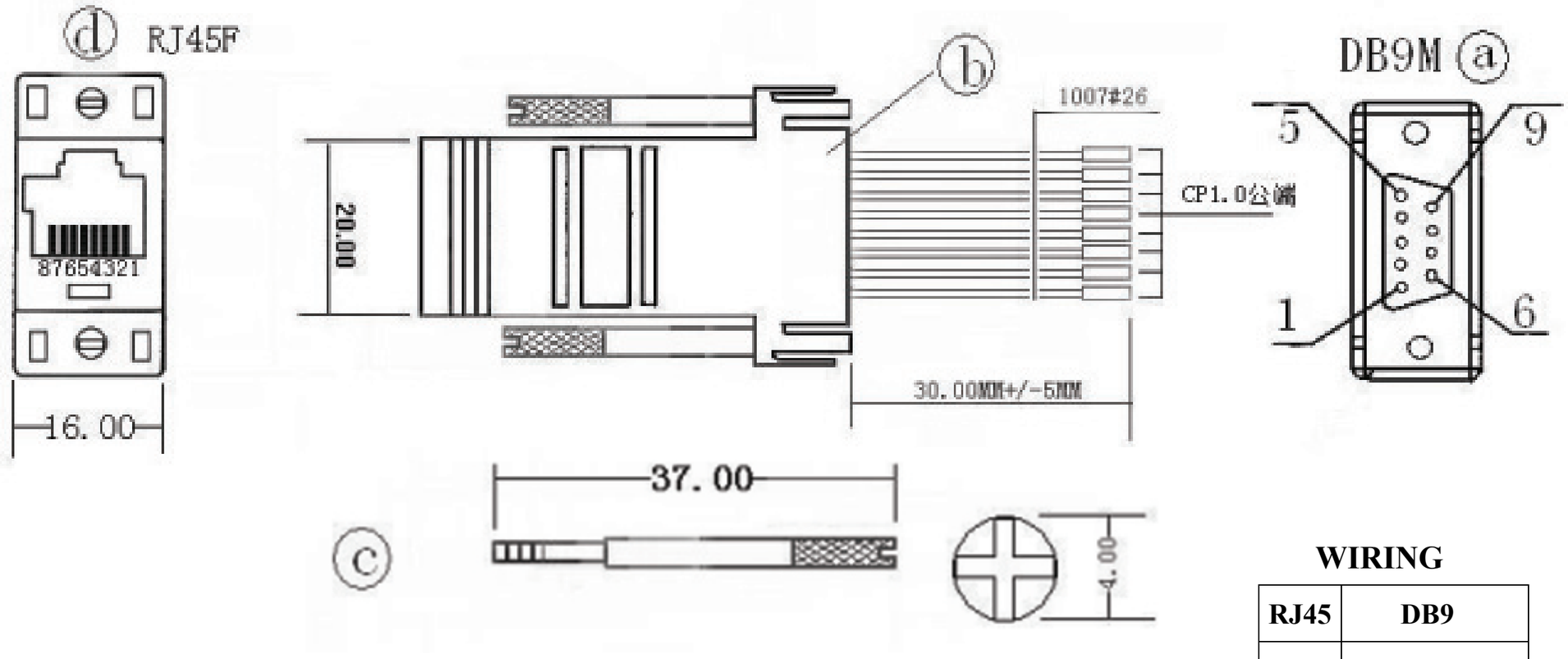


**WIRING**

| RJ45 | DB9 |
|---|---|
| 1 | BLUE |
| 2 | ORANGE |
| 3 | BLACK |
| 4 | RED |
| 5 | GREEN |
| 6 | YELLOW |
| 7 | BROWN |
| 8 | WHITE |

**MATERIAL (ROHS COMPLIANT):**

a. CONNECTOR: DB9 M BLACK INSULATION, ROHS
b. DB9 TO RJ45 HOUSING, BEIGE OR GREY COLOR
c. SCREW: UNC #4-40 / 37.00MM NICKEL PLATED
d. CONNECTOR: RJ45 FEMALE / 8P8C

**ELECTRICAL:**

1. 100% OPEN, SHORT AND MIS-WIRING TEST
2. HI-POT: DC 300V 10M Ohm/MIN
3. CONTACT RESISTANCE: 5 OHM (MAX.)

| Itemref | Quantity | Title/Name, designation, material, dimension etc | | | Article No./Reference | |
|---|---|---|---|---|---|---|
| Designed by | | Checked by | Approved by - date | File name MODULAR | Date | Scale FREE |
| | | | | 22 2630 | | |
| | | | | Modular DB9 M / RJ45 | Edition 1 | Sheet 1/1 |