RevNo	Revision note	Date	Signature	Checked

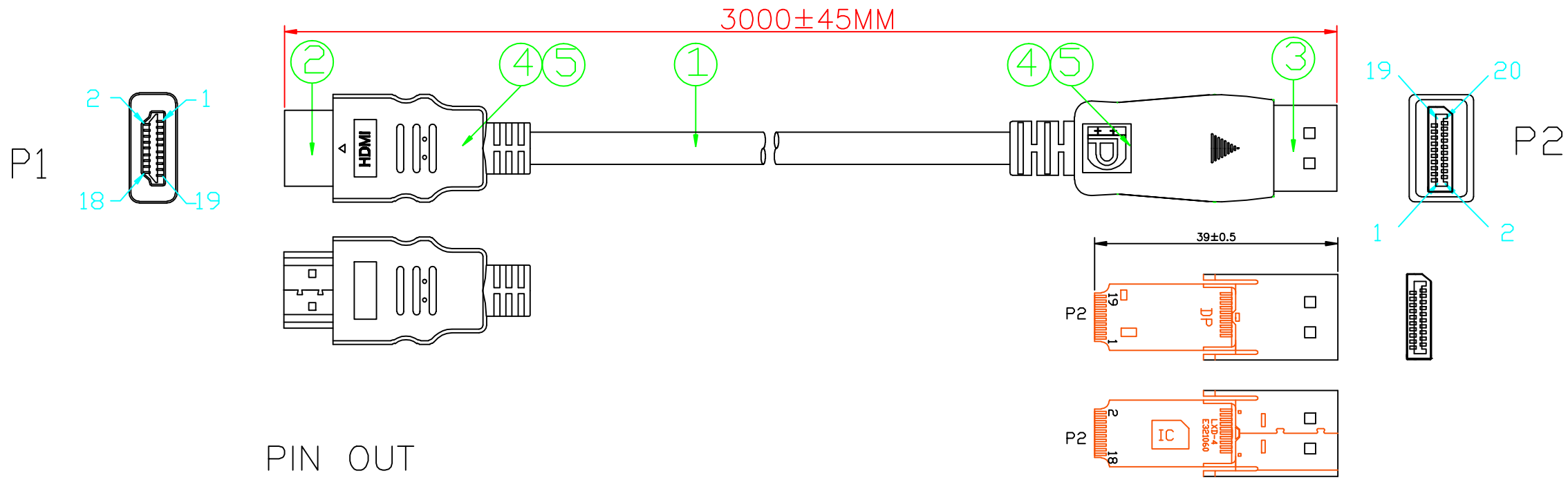

PIN OUT

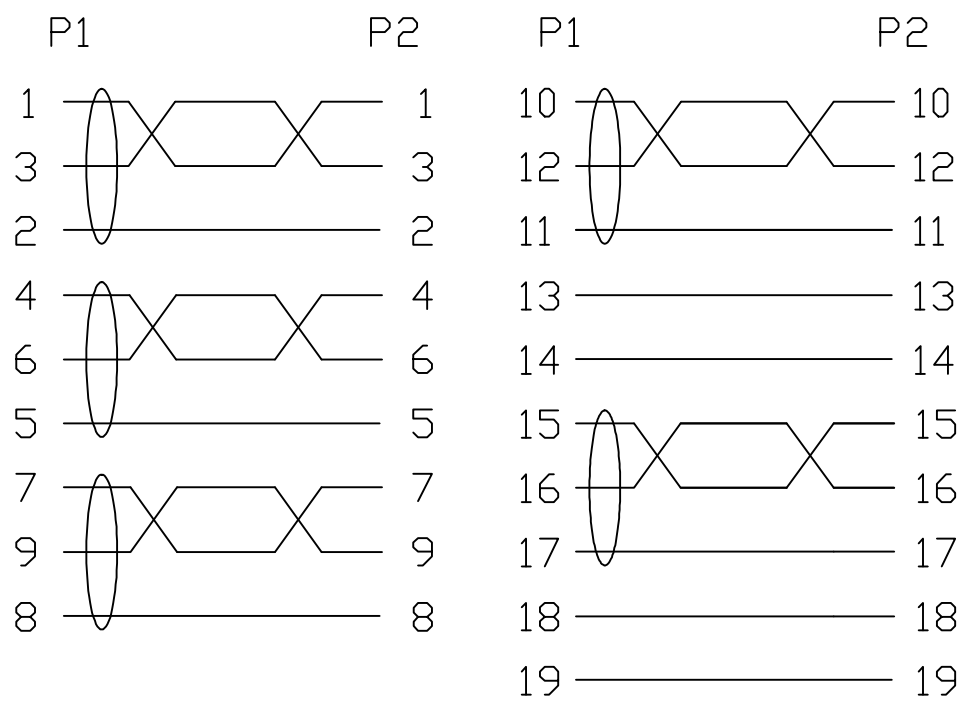

NOTES:

1:100% short,open and miss wire test.

2:Insulation resistance:DC300V 10MΩ(Min)

Conduction resistance 5Ω(Max)

3:Use testing:1080P

NO.	MATERIAL	DESCRIPTIONG	QTY.	UNIT
⑤	OUTER MOLDED	WHITE 45P PVC	0.024	KG
④	INNER MOLDED	LDPE	0.024	KG
③	CONNECTOR	DP 20PIN MALE WITH PCB BOARD,THE PIN GOLD PLATED,THE SHELL FOR GOLD PLATING	1	PCS
②	CONNECTOR	HDMI 19PIN MALE,THE PIN GOLD PLATED,THE SHELL FOR GOLD PLATING	1	PCS
①	CABLE	(1P*30#+D+AL+MYLAR)*5C+4C*30#+F+ADB JACKET:BLACK PVC,OD:6.0±0.2MM	1000	MM

Itemref	Quantity	Title/Name,designation,material,dimension etc		Article No./Reference	
Designed by	Checked by	Approved by - date SEP 13.2013	File name HDMI TO DP 3M	Date SEP 13.2013	Scale FREE
ANGLE:		HDMI/AM-DP/M 30AWG			
UNIT:MM		24 0217		Edition 1	Sheet 1/1