July 27, 2012

Re: RapidRun Component Transition – Specification Packets

In May 2012 C2G, formerly Cables To Go, began phasing in a new platform iteration to the RapidRun product line. This new line is RapidRun Multi-Format, also known as RapidRun *Orange,* and consists of a full line of runner cables, flying leads and wall plates that will be phased in over the next six to eight months. Currently, there are products within the RapidRun Multi-Format line that are replacing some products within the RapidRun PC (*Yellow*) product set. In the cases where RapidRun Multi-Format products are being introduced, the equivalent parts of the RapidRun PC line are being discontinued.

The RapidRun Multi-Format products are functional equivalents for the RapidRun PC products. The specifications are superior and compatibility with the RapidRun PC line accessories (flying leads, wall plates) is ensured through the use of specially designed adapters. Attached is a packet containing drawings and technical specifications that indicate the cable construction, pin out designs and performance characteristics between the two product lines for Runners, Flying Leads and Wall Plates.

Should you have additional questions or concerns, please contact Chris Cowlan, RapidRun Product Manager, at (937) 405-9483 or ccowlan@lastar.com.

Sincerely,

Garry Dukes
Director of Product Management
Lastar Inc., dba C2G

SPECIFICATION SHEET

RapidRun® Multi-Format Runner Cables CMG-rated

- CMG-rated for in-wall installations
- Connectors equipped with a protective pulling cap capable of 30lbs of pulling tension
- Three 28AWG coaxial cables with braided copper shielding, three 24AWG individually shielded twisted pair and a single 24AWG pair
- Lifetime Warranty

*The specifications apply only to the raw cable used to construct the cable assemblies

3555 Kettering Blvd. | Moraine OH | 45439 | www.cablestogo.com | 800.287.2843

© 2012 Lastar Inc.

Specifications: RapidRun® Multi-Format Runner Cables CMG-rated

Electrical Characteristics:

3 Coax Conductors:

Impedance:	75 ± 5Ohm
Capacitance:	71 ± 2pF/ ft nom
Velocity of Propagation:	78 ± 1%
DC Resistance:	237 ± 10Ω/km
Dielectric Strength:	500VAC/1 minute min.
Insulation Resistance (500V):	10MΩ/KM

Attenuation (dB/6m):

	Red Coax	Green Coax	Blue Coax
1MHz	0.15	0.14	0.14
10MHz	0.86	0.97	0.41
100MHz	2.98	3.23	1.26
200MHz	4.45	4.87	1.82
500MHz	6.72	7.75	3.00
700MHz	9.95	12.01	3.64
1000MHz	13.20	17.52	4.59

3 Twisted Pair Conductors

DC Resistance:	93.25Ω/m at 20°C
Dielectric Strength:	750VAC/ minute min.
Insulation Resistance:	100Mohm/KM at 20°C

Physical Characteristics:

Voltage Rating:	30V
Temperature Rating:	80°C
Temperature Range:	-25° ~ 80°C
Minimum Bend Radius	90mm
Approvals:	RoHS Compliant
Warranty:	Lifetime
Package Type:	Polybag

Conductor (Qty. 3):

Conductor Type:	28AWG 7/0.127 Tinned Copper
Dielectric:	Foam PE Avg. Thickness: 1.57mm
Shield:	Spiral 90% Coverage Tinned Copper
Insulation:	Avg. Thickness: 0.23mm PVC: (1) red, (1) blue, (1) green

Overall Cable:

Foil Shield:	Aluminum 100% Coverage
Braided shield:	Tinned Copper 24/8/0.12 85% Coverage
Jacket:	Matte PVC - CMG-rated Avg. Thickness: 0.76mm Orange Heat Shrink O.D.: 9.0 ± 0.15mm

Conductor (Qty. 3 twisted pair):

Conductor Type:	24AWG 7/0.2 Tinned Copper
Foil Shield:	Aluminum 100% coverage
Insulation:	PVC Avg. Thickness: 0.23mm

Conductor (Qty. 2 conductors):

Conductor Type:	24AWG 7/0.2 Tinned Copper
Insulation:	Avg. Thickness: 0.23mm PVC

RapidRun Din Connector:

Connector Type:	DIN 15 pin
Contact Material:	Brass, 3µm Gold Plating
Insulation:	Black PBT
Dimensions (D x L):	16.0 x 39.0mm

© 2012 Lastar Inc.

Specifications: RapidRun® Multi-Format Runner Cables CMG-rated

Item	Description	Weight (lbs)
60000	6ft RapidRun CMG-rated Multi-Format Runner Cable CMG-rated	0.66
60001	10ft RapidRun CMG-rated Multi-Format Runner Cable CMG-rated	0.96
60002	15ft RapidRun CMG-rated Multi-Format Runner Cable CMG-rated	1.36
60003	25ft RapidRun CMG-rated Multi-Format Runner Cable CMG-rated	2.17
60004	35ft RapidRun CMG-rated Multi-Format Runner Cable CMG-rated	2.93
60005	50ft RapidRun CMG-rated Multi-Format Runner Cable CMG-rated	4.05
60006	75ft RapidRun CMG-rated Multi-Format Runner Cable CMG-rated	6.03
60007	100ft RapidRun CMG-rated Multi-Format Runner Cable CMG-rated	8.04
60008	125ft RapidRun CMG-rated Multi-Format Runner Cable CMG-rated	9.93
60009	150ft RapidRun CMG-rated Multi-Format Runner Cable CMG-rated	11.84
60074	3ft Multi-Format Runner Extension Cable CMG-rated	0.38
60075	6ft Multi-Format Runner Extension Cable CMG-rated	0.63
60076	10ft Multi-Format Runner Extension Cable CMG-rated	0.95

© 2012 Lastar Inc.

REV.	CHANGE DETAILE	ECO NO.	DATE
B	CHANGE HEAT SHRINK TUBE	20120007	2012.1.6

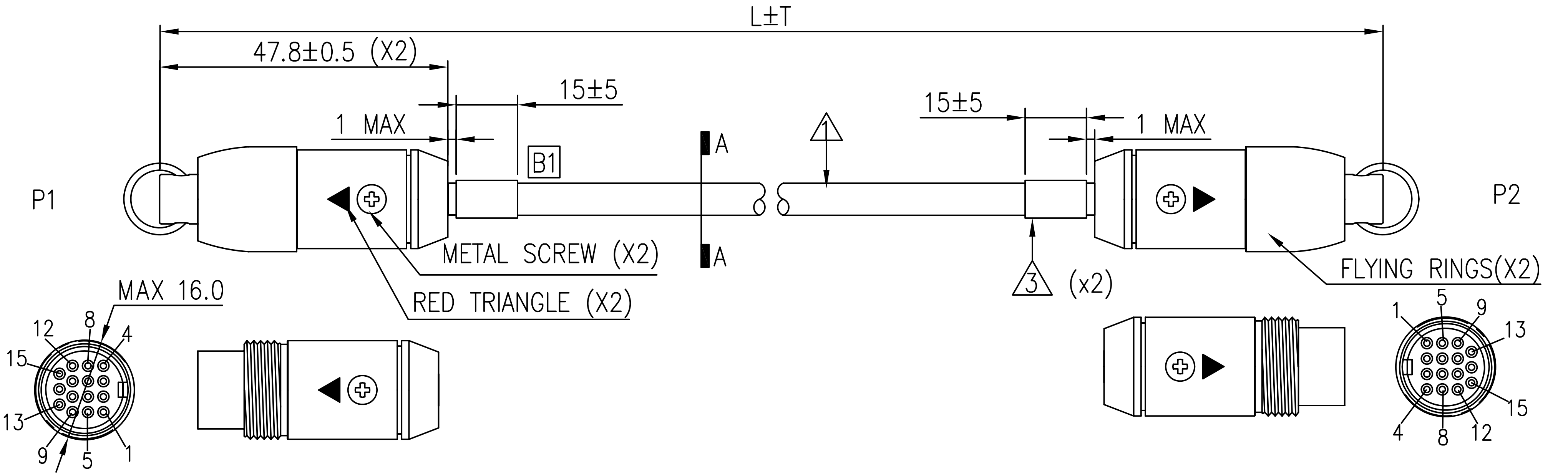

P/N CHART

P/N(xxxxx)	***FT	L	T	X''	Y''
60009	150FT	45720	±305	16	18
60008	125FT	38100	±305	16	18
60007	100FT	30480	±305	14	16
60006	75FT	22860	±305	14	16
60005	50FT	15240	±305	14	16
60004	35FT	10668	+305/−152	10	13
60003	25FT	7620	+305/−152	10	13
60002	15FT	4572	+152/−51	8	12.5
60001	10FT	3048	+152/−51	8	12.5
60000	6FT	1829	+152/−51	8	12.5

MANUFACTURED IN CHINA

☐ O
☒ S

DRAWING APPROVED ____________ DATE: ____________

SAMPLE APPROVED PER DRAWING SPECIFICATIONS ____________ DATE: ____________

PROPRIETARY & CONFIDENTIAL. THE INFORMATION CONTAINED IN THIS DRAWING IS THE SOLE PROPERTY OF CABLES TO GO. ANY REPRODUCTION IN PART OR AS A WHOLE WITHOUT THE WRITTEN PERMISSION OF CABLES TO GO IS PROHIBITED.

(projection symbol)	mm	TITLE	DIN15P FEMALE TO DIN15P FEMALE
SCALE	NONE		
SHEET	1/4	CUS. NAME	CTG
DIMENSIONAL TOLERANCES UNLESS OTHERWISE NOTED			
.X ±	.XX ±	CUS. P/N	P/N
.XXX ±	ANGLES ±		
REV. B	CUS. REV	DRAW NO.	P1108011-E

CablesToGo™ Service Through Every Connection

	Name	DATE
ENG.	Dave	01-06-2012
CHECKED	Sean	01-06-2012
APPROVED	Gary	01-06-2012

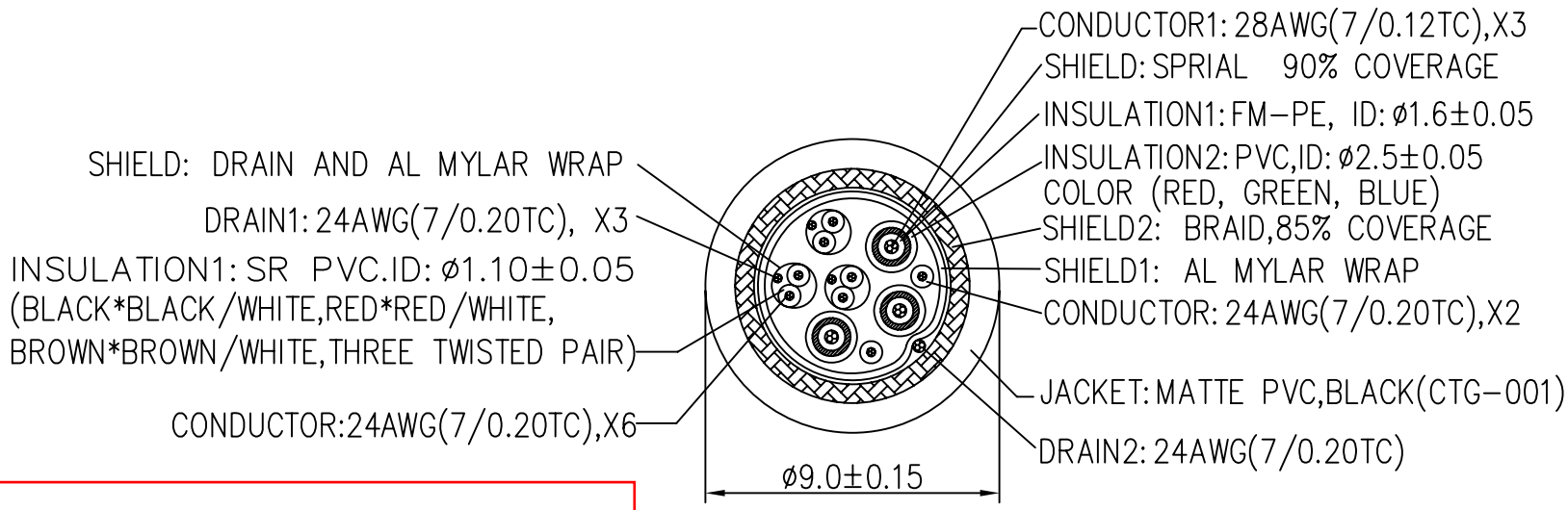

SEC A-A

SCALE: NTS

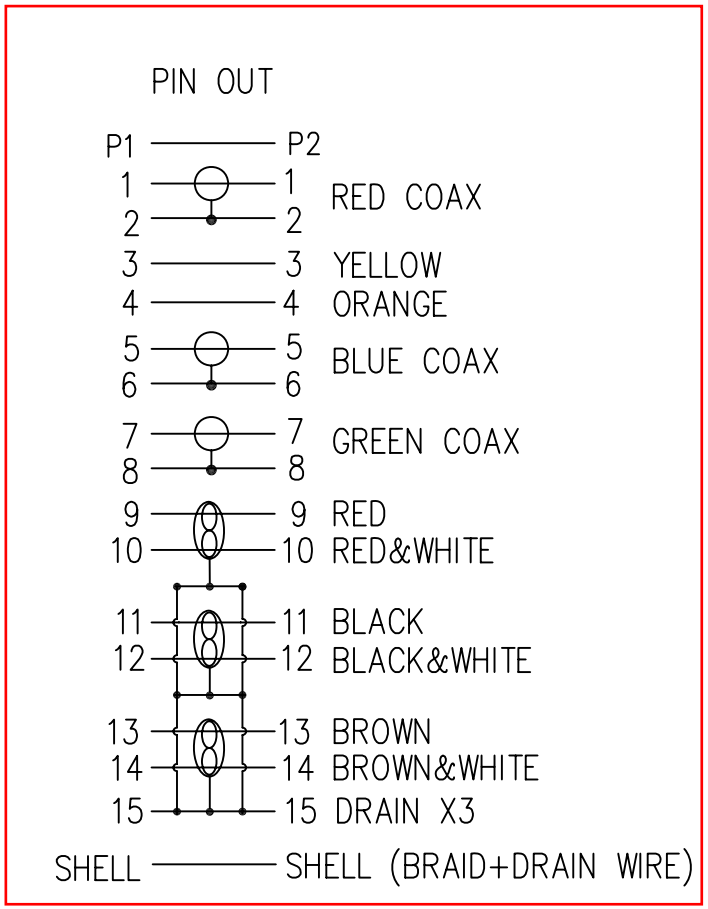

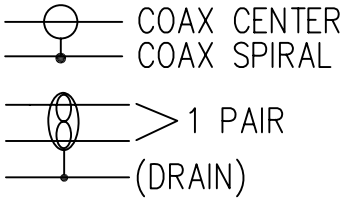

MANUFACTURED IN CHINA

RoHS Compliant Product Authorized Environmentally

DRAWING APPROVED		DATE:	
SAMPLE APPROVED PER DRAWING SPECIFICATIONS		DATE:	

PROPRIETARY & CONFIDENTIAL. THE INFORMATION CONTAINED IN THIS DRAWING IS THE SOLE PROPERTY OF CABLES TO GO. ANY REPRODUCTION IN PART OR AS A WHOLE WITHOUT THE WRITTEN PERMISSION OF CABLES TO GO IS PROHIBITED.

mm		TITLE	DIN15P FEMALE TO DIN15P FEMALE
SCALE	NONE		
SHEET	2/4	CUS. NAME	CTG
DIMENSIONAL TOLERANCES UNLESS OTHERWISE NOTED		CUS. P/N	P/N
.X ±	.XX ±		
.XXX ±	ANGLES ±	DRAW NO.	P1108011-E
REV. B	CUS. REV		

☐ O ☒ S

CablesToGo™ Service Through Every Connection

ENG.	Dave	DATE 01-06-2012
CHECKED	Sean	DATE 01-06-2012
APPROVED	Gary	DATE 01-06-2012

NOTES:

1. CABLE: CABLE, SEE SEC A-A.
2. CONNECTOR: P1 & P2: DIN 15PIN FEMALE: SOLDER TYPE, GOLD FLASH CONTACTS, BLACK PBT INSULATION, ASSEMBLY TYPE, WITH METAL ASSEMBLY SHELL, WITHOUT KEY, NICKEL PLATED SHELL.
3. B2 ORANGE HEAT SHRINK TUBE.
4. ALL MATERIALS ARE RoHS COMPLIANT.
5. TESTING: 100% ELECTRICAL TEST AT 10M OHM INSULATION RESISTANCE.
6. PACKING: 2 PCS RING (SEE "DETAIL A") IN A SMALL RapidRun ZIP-LOCK POLY-BAG [WITH RoHS AND "ASSEMBLY INSTRUCTIONS" MARK] WITH A CABLE IN A RapidRun ZIP-LOCK POLY-BAG. (WITH RoHS MARK) BAR CODE LABEL (WHITE BACKGROUND WITH BLACK LETTERS, SEE "DETAIL B") TO BE PASTED ON RapidRun ZIP-LOCK POLY-BAG.
7. CABLE MARKING:INCLUDE "RapidRun(TM) PC Runner E****** (UL) CMG Rated 75°C 28AWG/3C + 24AWG/8C"ALONG ITS LENGTH.

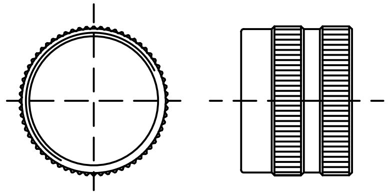

DETAIL A

#xxxxx

***FT RAPIDRUN RUNNER UXGA CMG

7 57120 xxxxx *

CODE UPC-A

"*" CHECK DIGIT

"***"&"xxxxx" SEE THE "P/N CHART"

DETAIL B

MANUFACTURED IN CHINA

DRAWING APPROVED		DATE:	
SAMPLE APPROVED PER DRAWING SPECIFICATIONS		DATE:	

PROPRIETARY & CONFIDENTIAL. THE INFORMATION CONTAINED IN THIS DRAWING IS THE SOLE PROPERTY OF CABLES TO GO. ANY REPRODUCTION IN PART OR AS A WHOLE WITHOUT THE WRITTEN PERMISSION OF CABLES TO GO IS PROHIBITED.

UNITS	mm	TITLE	DIN15P FEMALE TO DIN15P FEMALE
SCALE	NONE	CUS. NAME	CTG
SHEET	3/4	CUS. P/N	P/N
DIMENSIONAL TOLERANCES UNLESS OTHERWISE NOTED		DRAW NO.	P1108011-E
.X ±	.XX ±		
.XXX ±	ANGLES ±		
REV. B	CUS. REV		

☐ O
☒ S

CablesToGo™
Service Through Every Connection

		DATE
ENG.	Dave	01-06-2012
CHECKED	Sean	01-06-2012
APPROVED	Gary	01-06-2012

SPECIFICATION SHEET

RapidRun® Plenum-Rated Multi-Format Runner Cable

- CMP rated for installations in plenum rated spaces
- Connectors equipped with a protective pulling cap capable of 30lbs of pulling tension
- Three 28AWG coaxial cables with braided copper shielding, three 26AWG individually shielded twisted pair, and a single 26AWG pair
- Lifetime Warranty

*The specifications apply only to the raw cable used to construct the cable assemblies

3555 Kettering Blvd. | Moraine OH | 45439 | www.cablestogo.com | 800.287.2843

© 2012 Lastar Inc.

Specifications: RapidRun® Plenum-Rated Multi-Format Runner Cable

Electrical Characteristics:

3 Coax Conductors:

Impedance:	75 ± 5Ohm
Capacitance:	53 ± 2pF/ ft nom
Velocity of Propagation:	80%
DC Resistance:	0.221Ω/m at 20°C
Dielectric Strength:	750VAC/1 minute min.
Insulation Resistance:	100MΩ/KM at 20°C
Attenuation (dB/6m):	

	dB/100ft
1.0MHz	0.6
3.6MHz	1.2
5.0MHz	1.4
7.0MHz	1.7
9.0MHz	2.0
10.0MHz	2.1
30.0MHz	3.8
50.0MHz	5.1
100.0MHz	7.6

3 Twisted Pair Conductors

DC Resistance:	0.139Ω/m at 20°C
Dielectric Strength:	750VAC/ minute min.
Insulation Resistance:	100MOhm/KM at 20°C

Physical Characteristics:

Voltage Rating:	300V
Temperature Rating:	75°C
Temperature Range:	-25° ~ 75°C
Minimum Bend Radius	82.5mm
Approvals:	RoHS Compliant
Warranty:	Lifetime
Package Type:	Polybag

Conductor (Qty. 3):

Conductor Type:	28AWG 7/36 Tinned Copper
Dielectric:	Avg. Thickness: 0.13mm Cellular FEP
Shield:	Braid 94% Coverage Tinned Copper
Insulation:	Avg. Thickness: 0.20mm Low Smoke PVC: (1) red, (1) blue, (1) green

Overall Cable:

Foil Shield:	Aluminum Polyester Tape – 125%
Braided Shield:	85% Coverage Tinned Copper
Drain Wire:	24AWG 7/0.20 Tinned Copper
Jacket:	Avg. Thickness: 2.49mm Low Smoke PVC Orange Heat Shrink 6.80 ± 0.15mm

Conductor (Qty. 3 twisted pair):

Conductor Type:	26AWG 7/34 Tinned Copper
Foil Shield:	Aluminum 100% coverage
Insulation:	Avg. Thickness:0.13 mm FEP

Conductor (Qty. 2 conductors):

Conductor Type:	26AWG 7/34 Tinned Copper
Insulation:	Avg. Thickness:0.13 mm FEP

RapidRun Din Connector:

Connector Type:	DIN 15 pin
Contact Material:	Brass, 3µm Gold Plating
Insulation:	Black PBT
Dimensions:	16.0 x 39.0mm

© 2012 Lastar Inc.

Specifications: RapidRun® Plenum-Rated Multi-Format Runner Cable

Part Number	Description	Weight (lbs)
60010	15ft RapidRun Plenum-rated Multi-Format Runner Cable	1.01
60011	25ft RapidRun Plenum-rated Multi-Format Runner Cable	1.60
60012	35ft RapidRun Plenum-rated Multi-Format Runner Cable	2.20
60013	50ft RapidRun Plenum-rated Multi-Format Runner Cable	3.33
60014	75ft RapidRun Plenum-rated Multi-Format Runner Cable	4.70
60015	100ft RapidRun Plenum-rated Multi-Format Runner Cable	6.27
60016	125ft RapidRun Plenum-rated Multi-Format Runner Cable	7.92
60017	150ft RapidRun Plenum-rated Multi-Format Runner Cable	9.40

3555 Kettering Blvd. | Moraine OH | 45439 | www.cablestogo.com | 800.287.2843

© 2012 Lastar Inc.

REV.	CHANGE DETAILE	ECO NO.	DATE
B	CHANGE HEAT SHRINK TUBE	20120008	2012.1.6

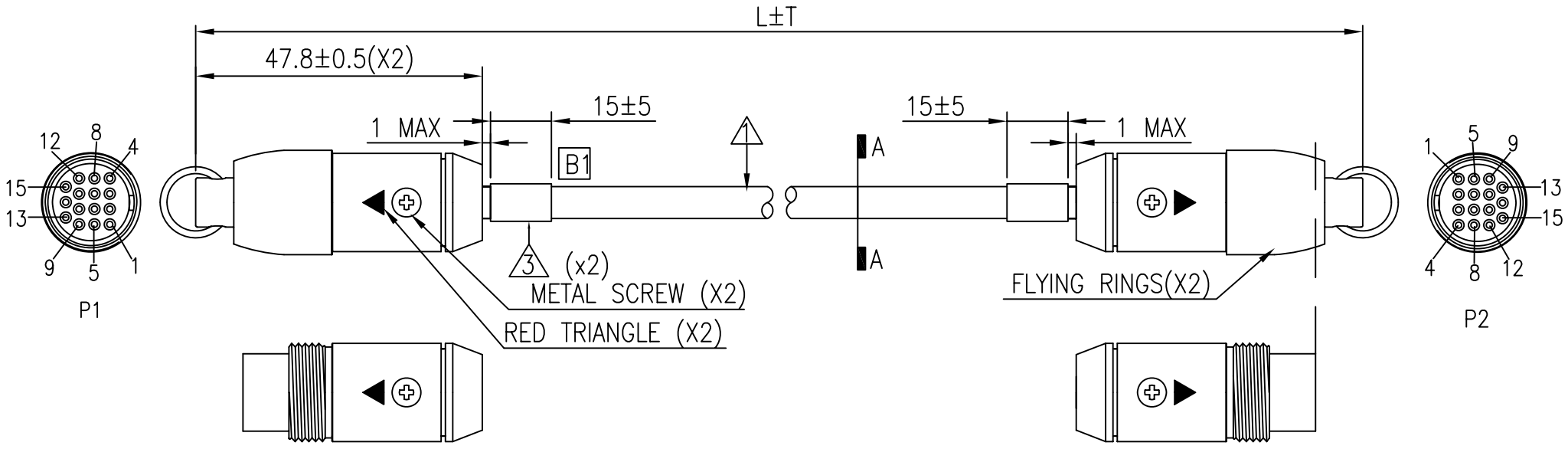

P/N CHART

60010	15	4572	+152/−51	8	12.5
60011	25	7620	+305/−152	10	13
60012	35	10668	+305/−152	10	13
60013	50	15240	±305	14	16
60014	75	22860	±305	14	16
60015	100	30480	±305	14	16
60016	125	38100	±305	16	18
60017	150	45720	±305	16	18
P/N(xxxxx)	***	L	T	X''	Y''

MANUFACTURED IN CHINA

RoHS Compliant Material Environmental

☐ O
☒ S

DRAWING APPROVED _____ DATE: _____

SAMPLE APPROVED PER DRAWING SPECIFICATIONS _____ DATE: _____

PROPRIETARY & CONFIDENTIAL. THE INFORMATION CONTAINED IN THIS DRAWING IS THE SOLE PROPERTY OF CABLES TO GO. ANY REPRODUCTION IN PART OR AS A WHOLE WITHOUT THE WRITTEN PERMISSION OF CABLES TO GO IS PROHIBITED.

mm	
SCALE	NONE
SHEET	1/4
DIMENSIONAL TOLERANCES UNLESS OTHERWISE NOTED	
.X ±	.XX ±
.XXX ±	ANGLES ±
REV. B	CUS. REV

TITLE: DIN15P FEMALE TO DIN15P FEMALE

CUS. NAME: CTG

CUS. P/N: SEE "P/N CHART"

DRAW NO.: P1108010-E

CablesToGo™ Service Through Every Connection

ENG.	Dave	DATE 01-06-2012
CHECKED	Sean	DATE 01-06-2012
APPROVED	Gary	DATE 01-06-2012

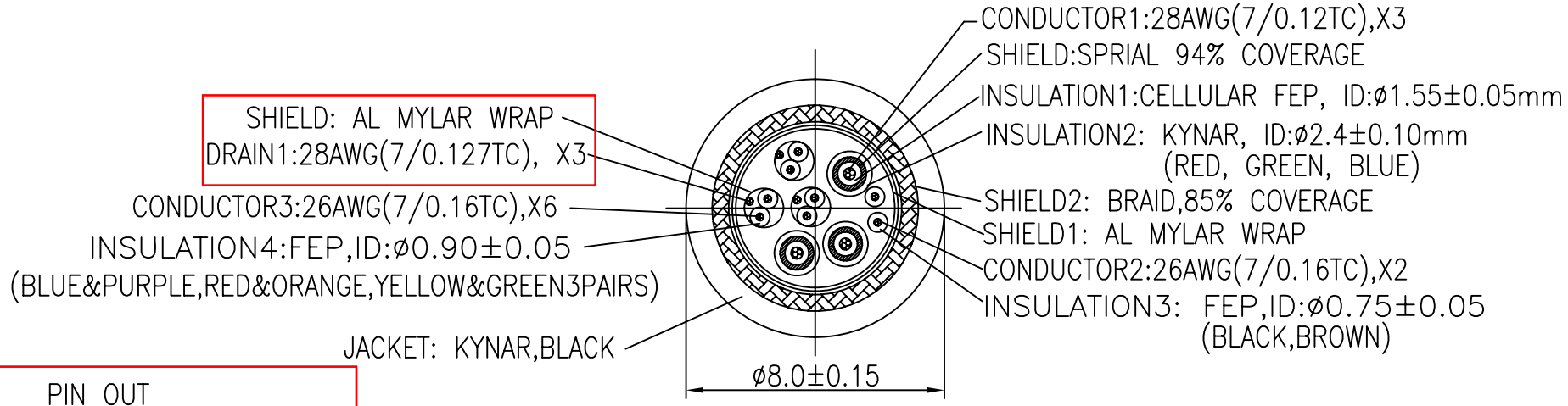

SEC A–A

SCALE:NTS

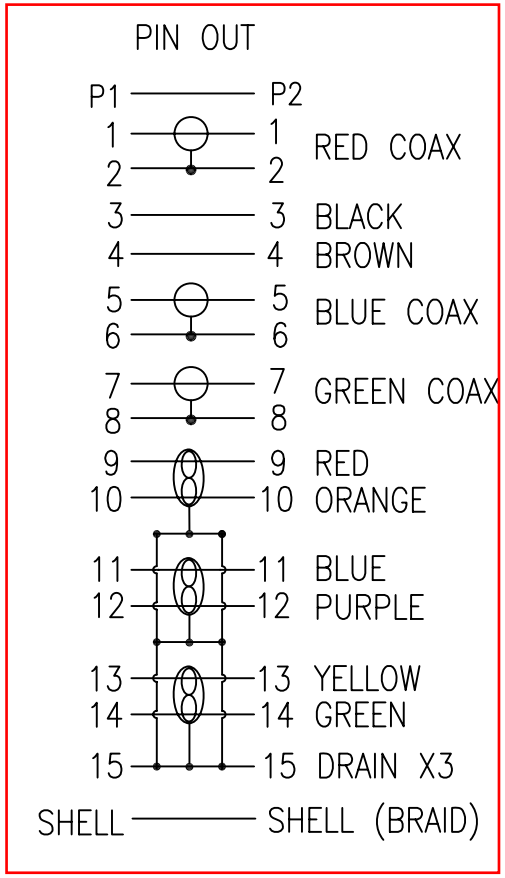

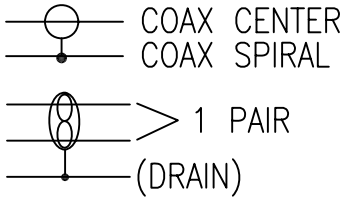

MANUFACTURED IN CHINA

DRAWING APPROVED		DATE:	
SAMPLE APPROVED PER DRAWING SPECIFICATIONS		DATE:	

PROPRIETARY & CONFIDENTIAL. THE INFORMATION CONTAINED IN THIS DRAWING IS THE SOLE PROPERTY OF CABLES TO GO. ANY REPRODUCTION IN PART OR AS A WHOLE WITHOUT THE WRITTEN PERMISSION OF CABLES TO GO IS PROHIBITED.

mm		TITLE	DIN15P FEMALE TO DIN15P FEMALE
SCALE	NONE		
SHEET	2/4	CUS. NAME	CTG
DIMENSIONAL TOLERANCES UNLESS OTHERWISE NOTED		CUS. P/N	SEE "P/N CHART"
.X ±	.XX ±		
.XXX ±	ANGLES ±	DRAW NO.	P1108010–E
REV. B	CUS. REV		

☐ O
☒ S

CablesToGo™ Service Through Every Connection

ENG.	Dave	DATE 01–06–2012
CHECKED	Sean	DATE 01–06–2012
APPROVED	Gary	DATE 01–06–2012

NOTES:

1. (triangle) CABLE: SEE SEC A-A, (HITACHI/#41215-11)
2. CONNECTOR: P1 & P2: DIN 15PIN FEMALE: SOLDER TYPE, GOLD FLASH CONTACTS, BLACK PBT INSULATION, ASSEMBLY TYPE, WITH METAL ASSEMBLY SHELL, WITHOUT KEY, NICKEL PLATED SHELL. B2
3. (triangle) ORANGE HEAT SHRINK TUBE.
4. ALL MATERIALS ARE RoHS COMPLIANT.
5. TESTING: 100% ELECTRICAL TEST AT 10M OHM INSULATION RESISTANCE.
6. PACKING: 2 PCS RING (SEE "DETAIL A") IN A SMALL RapidRun ZIP-LOCK POLY-BAG [WITH RoHS AND "ASSEMBLY INSTRUCTIONS" MARK] WITH A CABLE IN A RapidRun ZIP-LOCK POLY-BAG. (WITH RoHS MARK) BAR CODE LABEL (WHITE BACKGROUND WITH BLACK LETTERS, SEE "DETAIL B") TO BE PASTED ON RapidRun ZIP-LOCK POLY-BAG.
7. CABLE MARKING: LASTAR - 3 COAX 28AWG - 3STP 26AWG - 2C 26AWG - E330117 (UL) TYPE CMP c(UL) 125C -RoHS - Z/YY (XXXX) ZZZZ

WHERE: Z=MONTH OF MFG.
YY=YEAR OF MFG.
XXXX=JOB NUMBER.
ZZZZ=SEQUENTIAL FOOTAGE MARKING EVERY FOOT.

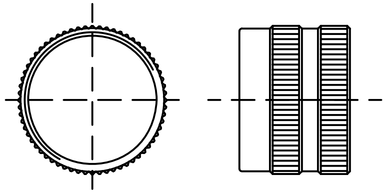

DETAIL A

#xxxxx
***FT RAPIDRUN RUNNER UXGA PLN SH
7 57120 xxxxx *

CODE UPC-A

"*" CHECK DIGIT

"***"&"xxxxx" SEE THE "P/N CHART"

DETAIL B

MANUFACTURED IN CHINA

RoHS Compliant Environmentally

DRAWING APPROVED		DATE:	
SAMPLE APPROVED PER DRAWING SPECIFICATIONS		DATE:	

PROPRIETARY & CONFIDENTIAL. THE INFORMATION CONTAINED IN THIS DRAWING IS THE SOLE PROPERTY OF CABLES TO GO. ANY REPRODUCTION IN PART OR AS A WHOLE WITHOUT THE WRITTEN PERMISSION OF CABLES TO GO IS PROHIBITED.

	mm	TITLE: DIN15P FEMALE TO DIN15P FEMALE	CablesToGo™ Service Through Every Connection
SCALE	NONE		
SHEET	3/4	CUS. NAME: CTG	
DIMENSIONAL TOLERANCES UNLESS OTHERWISE NOTED			
.X ±	.XX ±	CUS. P/N: SEE "P/N CHART"	ENG. Dave DATE 01-06-2012
.XXX ±	ANGLES ±		CHECKED Sean DATE 01-06-2012
REV. B	CUS. REV	DRAW NO. P1108010-E	APPROVED Gary DATE 01-06-2012

☐ O
☒ S

CablesToGo®
Service Through Every Connection

RapidRun® PC Runner & Runner Extension Cables

- CL2 Rated for in-wall installations
- Connectors equipped with a protective pulling cap capable of 30lbs of pulling tension
- Three 28AWG coaxial cables with braided copper shielding, three 24AWG twisted pair, and a single 24AWG pair
- Lifetime Warranty

*The specifications apply only to the raw cable used to construct the cable assemblies

Specifications: RapidRun® PC Runner & Runner Extension Cables

Electrical Characteristics:

3 Coax Conductors:

Impedance:	75 ± 5Ohm
Capacitance:	71 ± 2pF/ ft nom
Velocity of Propagation:	78 ± 1%
DC Resistance:	237 ± 10Ω/km
Dielectric Strength:	500VAC/1 minute min.
Insulation Resistance (500V):	10MΩ/KM

Attenuation (dB/6m):

	Red Coax	Green Coax	Blue Coax
1MHz	0.1464	0.1376	0.1419
10MHz	0.86	0.97	0.4058
100MHz	2.98	3.23	1.259
200MHz	4.45	4.87	1.823
500MHz	6.72	7.75	3.0028
700MHz	9.95	12.01	3.64
1000MHz	13.20	17.52	4.5923

3 Twisted Pair Conductors

DC Resistance:	93.25Ω/m at 20°C
Dielectric Strength:	750VAC/ minute min.
Insulation Resistance:	100Mohm/KM at 20°C

Physical Characteristics:

Voltage Rating:	30V
Temperature Rating:	80°C
Temperature Range:	-25° ~ 80°C
Minimum Bend Radius	90mm
Approvals:	RoHS Compliant
Warranty:	Lifetime
Package Type:	Polybag

Item	Description	Weight (lbs)
42134	6ft RapidRun CL2 Rated PC Runner Cable	0.66
42135	10ft RapidRun CL2 Rated PC Runner Cable	0.96
42136	15ft RapidRun CL2 Rated PC Runner Cable	1.36
42137	25ft RapidRun CL2 Rated PC Runner Cable	2.17
42138	35ft RapidRun CL2 Rated PC Runner Cable	2.93
42139	50ft RapidRun CL2 Rated PC Runner Cable	4.05
42140	75ft RapidRun CL2 Rated PC Runner Cable	6.03
42141	100ft RapidRun CL2 Rated PC Runner Cable	8.04
42142	125ft RapidRun CL2 Rated PC Runner Cable	9.93
42143	150ft RapidRun CL2 Rated PC Runner Cable	11.84
42048	3ft RapidRun CL2 Rated PC Extension Cable	0.38
42051	6ft RapidRun CL2 Rated PC Extension Cable	0.63
42055	10ft RapidRun CL2 Rated PC Extension Cable	0.95

Specifications: RapidRun® PC Runner & Runner Extension Cables

Conductor (Qty. 3):

Conductor Type:	28AWG 7/0.127 Tinned Copper
Dielectric:	Minimum Avg. Thickness: 1.57mm Foam PE
Shield:	Spiral 90% Coverage Tinned Copper
Insulation:	Minimum Avg. Thickness: 0.23mm PVC: (1) red, (1) blue, (1) green

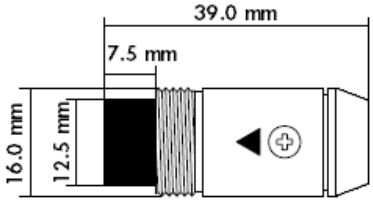

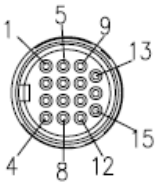

Conductor (Qty. 3 twisted pair + 2 conductors):

Conductor Type:	24AWG 7/0.2 Tinned Copper
Insulation:	Minimum Avg. Thickness: 0.23mm PVC

RapidRun Din Connector:

Connector Type:	DIN 15 pin
Contact Material:	Brass, 3µm Gold Plating
Insulation:	Black PBT

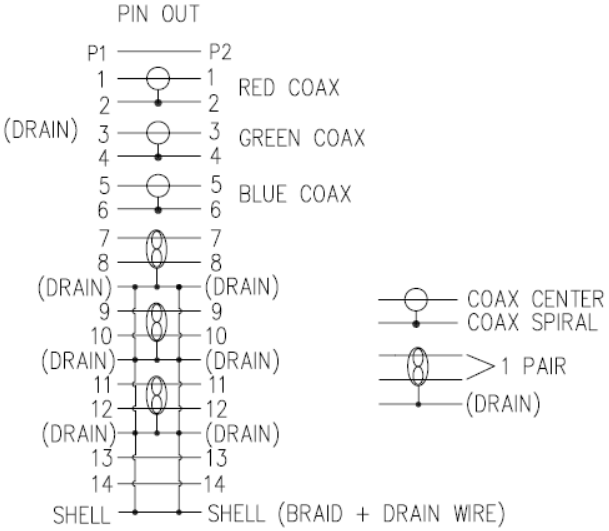

Overall Cable:

Shield:	Aluminum Mylar Wrap – 100% Braided Shield 24/8/0.12 85% Coverage - Tinned Copper
Jacket:	Minimum Avg. Thickness– 0.76mm Matte PVC Yellow Heat Shrink

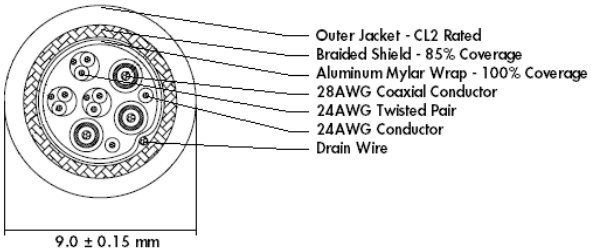

REV	ECO NO.	DATE
C	20090338	03-23-2009
D	20090486	04-02-2009
E	20101766	11-25-2010

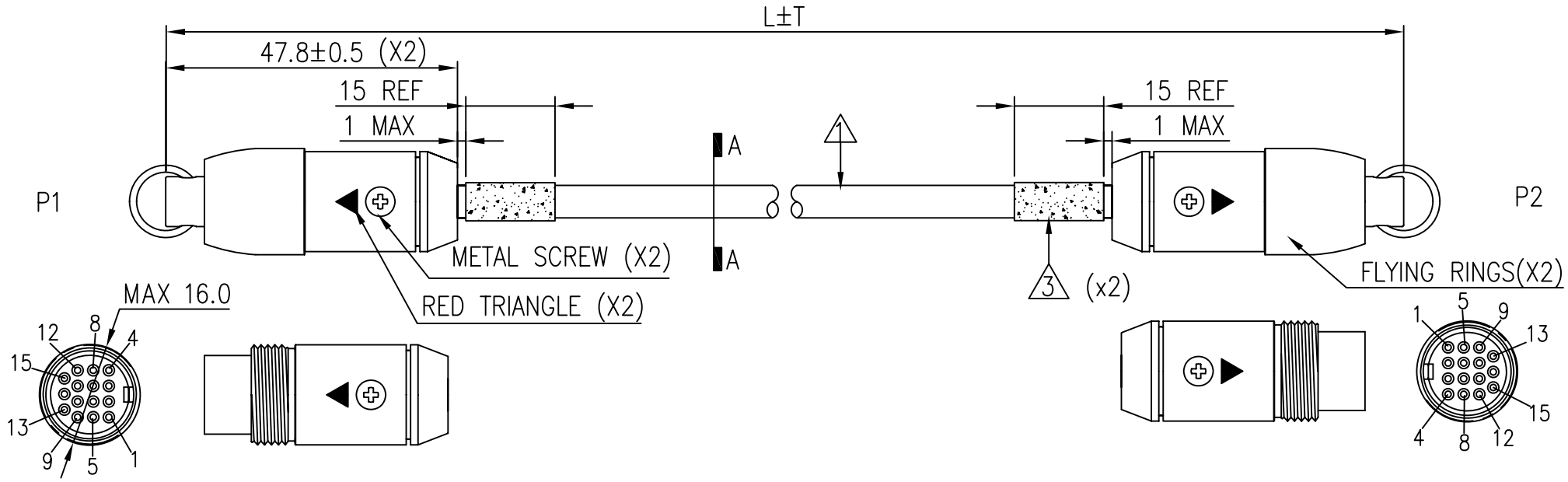

P/N CHART

42143	150FT	42143	45720	±305
42142	125FT	42142	38100	±305
42141	100FT	42141	30480	±305
42140	75FT	42140	22860	±305
42139	50FT	42139	15240	±305
42138	35FT	42138	10668	+305/−152
42137	25FT	42137	7620	+305/−152
42136	15FT	42136	4572	+152/−51
42135	10FT	42135	3048	+152/−51
42134	6FT	42134	1829	+152/−51
P/N	*****	XXXXX	L	T

MANUFACTURED IN CHINA

RoHS Compliant Product Environmentally

☐ O
☒ S

DRAWING APPROVED _____ DATE: _____

SAMPLE APPROVED PER DRAWING SPECIFICATIONS _____ DATE: _____

PROPRIETARY & CONFIDENTIAL. THE INFORMATION CONTAINED IN THIS DRAWING IS THE SOLE PROPERTY OF CABLES TO GO. ANY REPRODUCTION IN PART OR AS A WHOLE WITHOUT THE WRITTEN PERMISSION OF CABLES TO GO IS PROHIBITED.

mm	TITLE	DIN15P FEMALE TO DIN15P FEMALE	CablesToGo™ Service Through Every Connection
SCALE NONE	CUS. NAME	CTG	
SHEET 1/4			
DIMENSIONAL TOLERANCES UNLESS OTHERWISE NOTED	CUS. P/N	P/N	ENG. Togo DATE 11-25-2010
.X ± .XX ±			CHECKED Sean DATE 11-25-2010
.XXX ± ANGLES ±	DRAW NO.	P0902021-E	APPROVED Gary DATE 11-25-2010
REV. E CUS. REV			

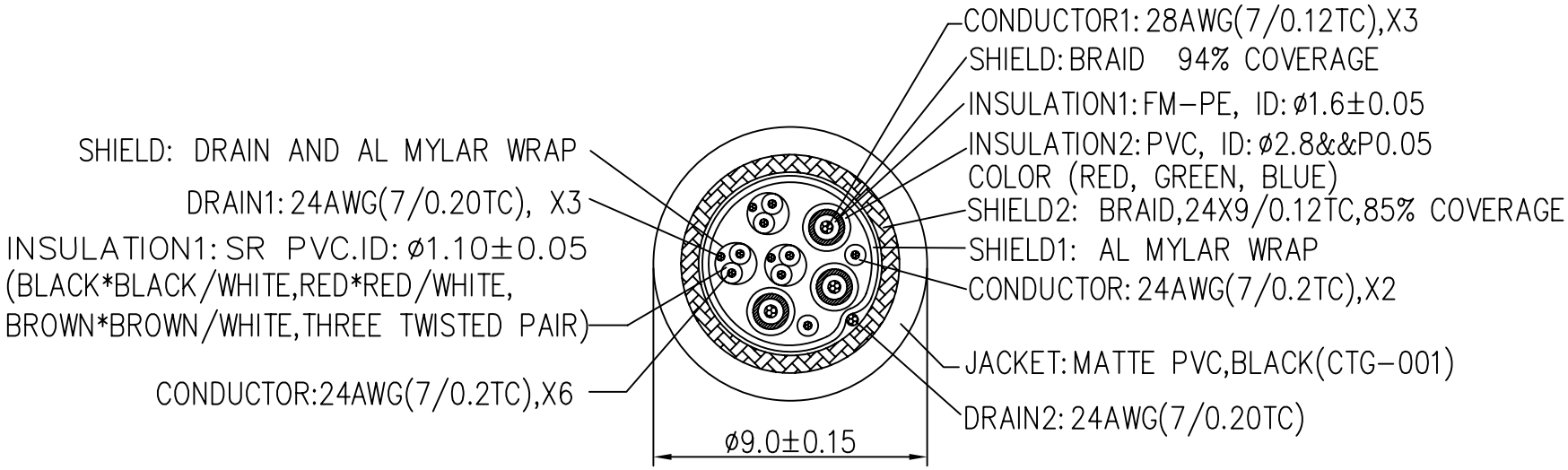

SEC A-A

SCALE: NTS

PIN OUT

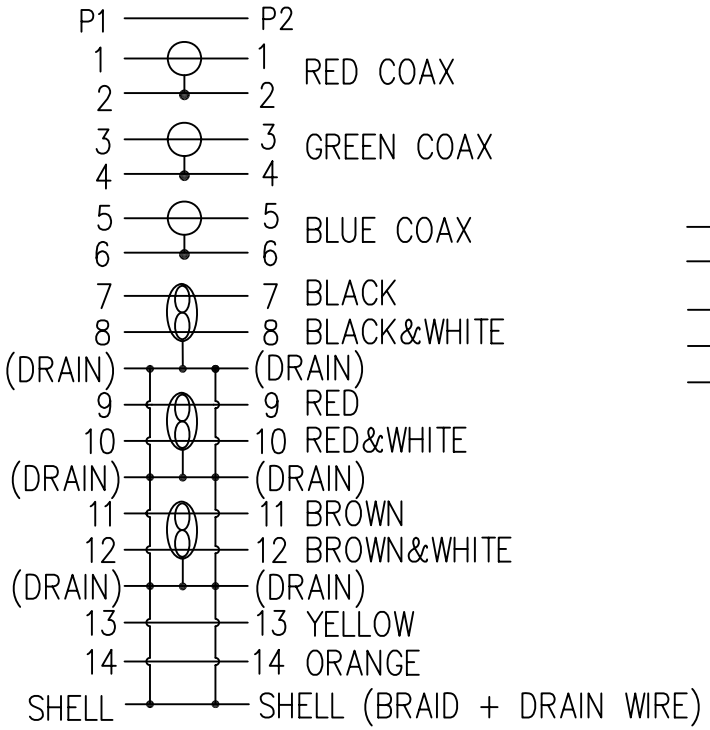

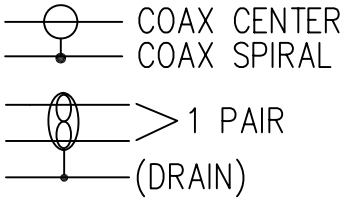

MANUFACTURED IN CHINA

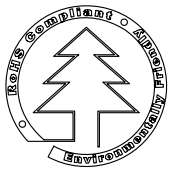

☐ O
☒ S

DRAWING APPROVED		DATE:	
SAMPLE APPROVED PER DRAWING SPECIFICATIONS		DATE:	

PROPRIETARY & CONFIDENTIAL. THE INFORMATION CONTAINED IN THIS DRAWING IS THE SOLE PROPERTY OF CABLES TO GO. ANY REPRODUCTION IN PART OR AS A WHOLE WITHOUT THE WRITTEN PERMISSION OF CABLES TO GO IS PROHIBITED.

mm		TITLE	DIN15P FEMALE TO DIN15P FEMALE
SCALE	NONE		
SHEET	2/4	CUS. NAME	CTG
DIMENSIONAL TOLERANCES UNLESS OTHERWISE NOTED			
.X ±	.XX ±	CUS. P/N	P/N
.XXX ±	ANGLES ±		
REV. E	CUS. REV	DRAW NO.	P0902021-E

CablesToGo™ Service Through Every Connection

ENG.	Togo	DATE 11-25-2010
CHECKED	Sean	DATE 11-25-2010
APPROVED	Gary	DATE 11-25-2010

NOTES:

1. CABLE: CABLE, SEE SEC A–A.
2. CONNECTOR: P1 & P2: DIN 15PIN FEMALE: SOLDER TYPE, GOLD FLASH CONTACTS, BLACK PBT INSULATION, ASSEMBLY TYPE, WITH METAL ASSEMBLY SHELL, WITHOUT KEY, NICKEL PLATED SHELL.
3. YELLOW HEAT SHRINK TUBE.
4. ALL MATERIALS ARE RoHS COMPLIANT.
5. TESTING: 100% ELECTRICAL TEST AT 10M OHM INSULATION RESISTANCE.
6. PACKING: 2 PCS RING (SEE "DETAIL A") IN A SMALL RapidRun ZIP–LOCK POLY–BAG [WITH RoHS AND "ASSEMBLY INSTRUCTIONS" MARK] WITH A CABLE IN A RapidRun ZIP–LOCK POLY–BAG. (WITH RoHS MARK) BAR CODE LABEL (WHITE BACKGROUND WITH BLACK LETTERS, SEE "DETAIL B") TO BE PASTED ON RapidRun ZIP–LOCK POLY–BAG.
7. CABLE MARKING:INCLUDE "RapidRun(TM) PC Runner E****** (UL) CL2 Rated 75°C 28AWG/3C + 24AWG/8C"ALONG ITS LENGTH.

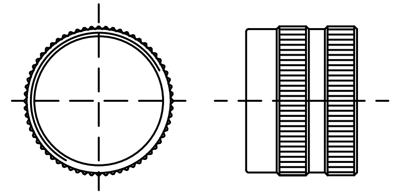

DETAIL A

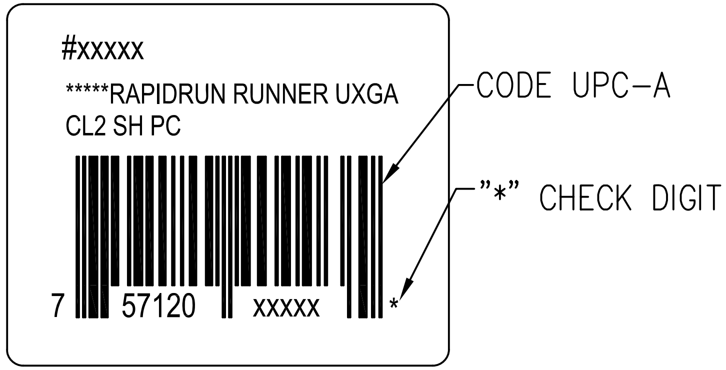

"*****" & "XXXXX" SEE THE "P/N CHART"

DETAIL B

MANUFACTURED IN CHINA

☐ O
☒ S

DRAWING APPROVED		DATE:	
SAMPLE APPROVED PER DRAWING SPECIFICATIONS		DATE:	

PROPRIETARY & CONFIDENTIAL. THE INFORMATION CONTAINED IN THIS DRAWING IS THE SOLE PROPERTY OF CABLES TO GO. ANY REPRODUCTION IN PART OR AS A WHOLE WITHOUT THE WRITTEN PERMISSION OF CABLES TO GO IS PROHIBITED.

(units)	mm	TITLE: DIN15P FEMALE TO DIN15P FEMALE	CablesToGo™ Service Through Every Connection
SCALE	NONE		
SHEET	3/4	CUS. NAME: CTG	
DIMENSIONAL TOLERANCES UNLESS OTHERWISE NOTED			
.X ±	.XX ±	CUS. P/N: P/N	ENG. Togo DATE 11–25–2010
.XXX ±	ANGLES ±		CHECKED Sean DATE 11–25–2010
REV. E	CUS. REV	DRAW NO. P0902021–E	APPROVED Gary DATE 11–25–2010

RapidRun® Plenum-Rated PC Runner Cable

- CMP rated for installations in plenum rated spaces
- Connectors equipped with a protective pulling cap capable of 30lbs of pulling tension
- Three 28AWG coaxial cables with braided copper shielding, three 26AWG twisted pair, and a single 26AWG pair
- Lifetime Warranty

*The specifications apply only to the raw cable used to construct the cable assemblies

3555 Kettering Blvd. | Moraine OH | 45439 | www.cablestogo.com | 800.287.2843

Specifications: RapidRun® Plenum-Rated PC Runner Cable

Electrical Characteristics:

3 Coax Conductors:

Impedance:	75 ± 5Ohm
Capacitance:	53 ± 2pF/ ft nom
Velocity of Propagation:	80%
DC Resistance:	0.221Ω/m at 20°C
Dielectric Strength:	750VAC/1 minute min.
Insulation Resistance:	100MΩ/KM at 20°C
Attenuation (dB/6m):	

	dB/100ft
1.0MHz	0.6
3.6MHz	1.2
5.0MHz	1.4
7.0MHz	1.7
9.0MHz	2.0
10.0MHz	2.1
30.0MHz	3.8
50.0MHz	5.1
100.0MHz	7.6

3 Twisted Pair Conductors

DC Resistance:	0.139Ω/m at 20°C
Dielectric Strength:	750VAC/ minute min.
Insulation Resistance:	100MOhm/KM at 20°C

Physical Characteristics:

Voltage Rating:	300V
Temperature Rating:	75°C
Temperature Range:	-25° ~ 75°C
Minimum Bend Radius	82.5mm
Approvals:	RoHS Compliant
Warranty:	Lifetime
Package Type:	Polybag

Item	Description	Weight (lbs)
40750	15ft RapidRun Plenum Rated PC Runner Cable	1.01
50729	25ft RapidRun Plenum Rated PC Runner Cable	1.60
50730	35ft RapidRun Plenum Rated PC Runner Cable	2.20
40752	50ft RapidRun Plenum Rated PC Runner Cable	3.33
40753	75ft RapidRun Plenum Rated PC Runner Cable	4.70
40754	100ft RapidRun Plenum Rated PC Runner Cable	6.27
40755	125ft RapidRun Plenum Rated PC Runner Cable	7.92
40756	150ft RapidRun Plenum Rated PC Runner Cable	9.40

Specifications: RapidRun® Plenum-Rated PC Runner Cable

Conductor (Qty. 3):

Conductor Type:	28AWG 7/36 Tinned Copper
Dielectric:	Minimum Avg. Thickness: 0.13mm Cellular FEP
Shield:	Braid 94% Coverage Tinned Copper
Insulation:	Minimum Avg. Thickness: 0.20mm Low Smoke PVC: (1) red, (1) blue, (1) green

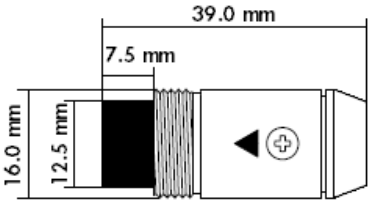

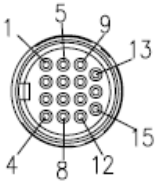

Conductor (Qty. 3 twisted pair + 2 conductors):

Conductor Type:	26AWG 7/34 Tinned Copper
Insulation	Minimum Avg. Thickness: 0.13 mm FEP

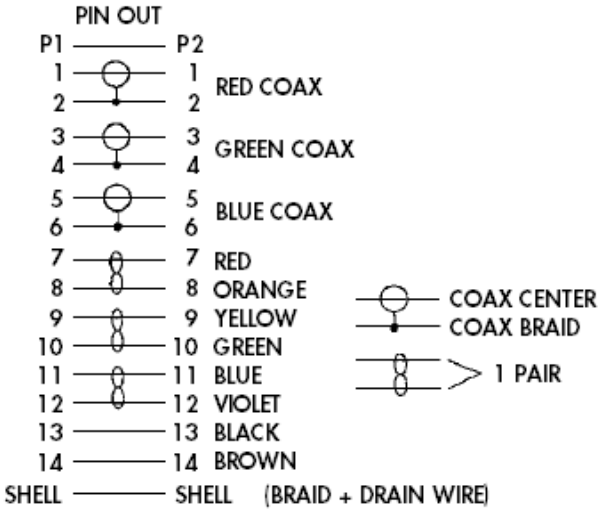

RapidRun Din Connector:

Connector Type:	DIN 15 pin
Contact Material:	Brass, 3µm Gold Plating
Insulation:	Black PBT

Overall Cable:

Shield:	Aluminum Polyester Tape – 125% Braided Shield 85% Coverage Tinned Copper
Drain Wire:	24AWG 7/0.20 Tinned Copper
Jacket:	Minimum Avg. Thickness– 2.49mm Low Smoke PVC

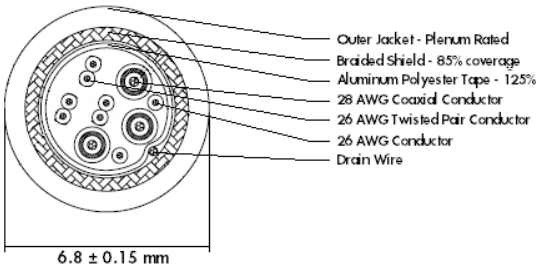

REV.	ECO NO.	DATE
C	20072263	12-13-2007
D	20101765	11-25-2010

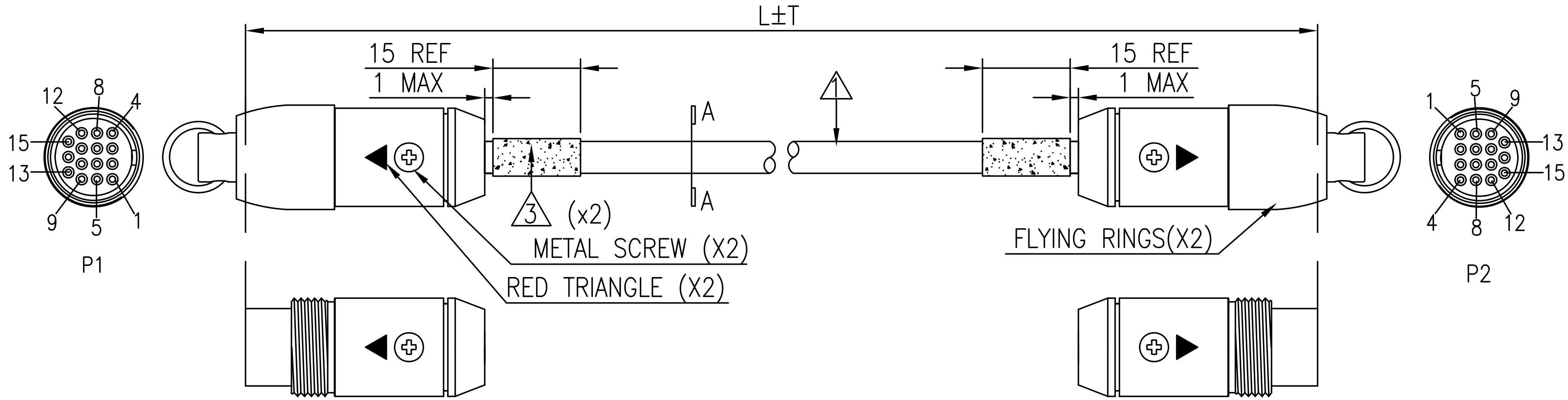

P/N CHART

P/N	xx	xxxxx	L	T
40750	15	40750	4572	+152/-51
50729	25	50729	7620	+305/-152
40751	30	40751	9144	+305/-152
50730	35	50730	10668	+305/-152
40752	50	40752	15240	±305
40753	75	40753	22860	±305
40754	100	40754	30480	±305
40755	125	40755	38100	±305
40756	150	40756	45720	±305

MANUFACTURED IN CHINA

RoHS Compliant Environmentally

☐ O
☒ S

DRAWING APPROVED ____________ DATE: ____________

SAMPLE APPROVED PER DRAWING SPECIFICATIONS ____________ DATE: ____________

PROPRIETARY & CONFIDENTIAL. THE INFORMATION CONTAINED IN THIS DRAWING IS THE SOLE PROPERTY OF CABLES TO GO. ANY REPRODUCTION IN PART OR AS A WHOLE WITHOUT THE WRITTEN PERMISSION OF CABLES TO GO IS PROHIBITED.

UNITS	mm
SCALE	NONE
SHEET	1/4
DIMENSIONAL TOLERANCES UNLESS OTHERWISE NOTED	
.X ±	.XX ±
.XXX ±	ANGLES ±
REV. D	CUS. REV

TITLE: DIN15P FEMALE TO DIN15P FEMALE

CUS. NAME: CTG

CUS. P/N: SEE "P/N CHART"

DRAW NO.: P0602028-E

CablesToGo™ Service Through Every Connection

		DATE
ENG.	Togo	11-25-2010
CHECKED	Sean	11-25-2010
APPROVED	Gary	11-25-2010

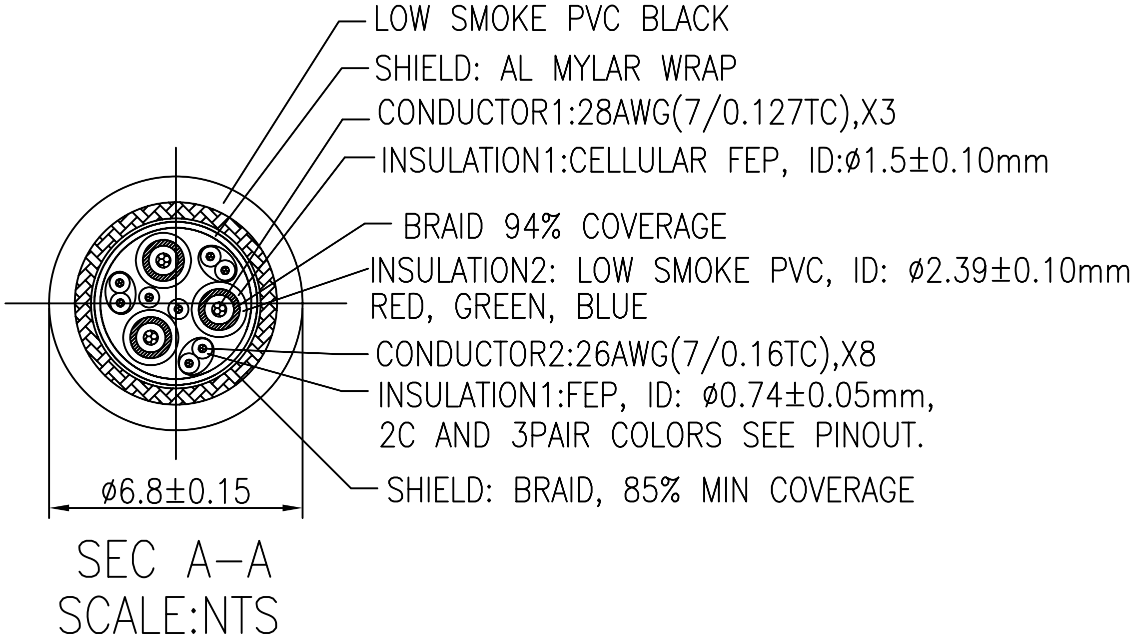

SEC A–A
SCALE:NTS

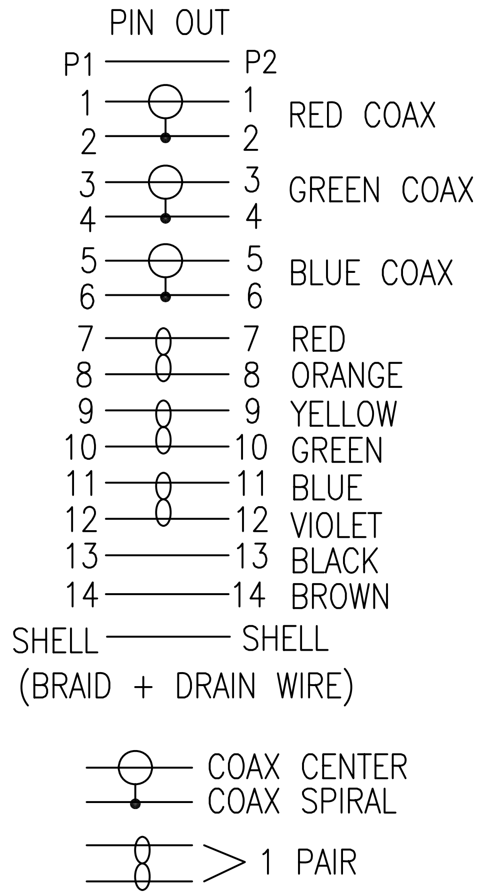

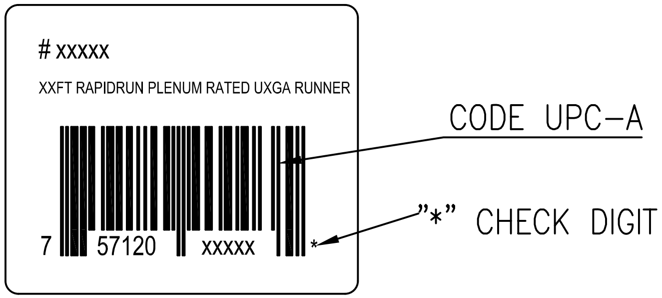

"XX" & "XXXXX" SEE THE "P/N CHART"
DETAIL C

MANUFACTURED IN CHINA

RoHS Compliant Environmentally Friendly

DRAWING APPROVED	DATE:
SAMPLE APPROVED PER DRAWING SPECIFICATIONS	DATE:

PROPRIETARY & CONFIDENTIAL. THE INFORMATION CONTAINED IN THIS DRAWING IS THE SOLE PROPERTY OF CABLES TO GO. ANY REPRODUCTION IN PART OR AS A WHOLE WITHOUT THE WRITTEN PERMISSION OF CABLES TO GO IS PROHIBITED.

(projection)	mm	TITLE	DIN15P FEMALE TO DIN15P FEMALE
SCALE	NONE	CUS. NAME	CTG
SHEET	2/4	CUS. P/N	SEE "P/N CHART"
DIMENSIONAL TOLERANCES UNLESS OTHERWISE NOTED		DRAW NO.	P0602028–E
.X ±	.XX ±		
.XXX ±	ANGLES ±		
REV. D	CUS. REV		

☐ O
☒ S

CablesToGo™
Service Through Every Connection

		DATE
ENG.	Togo	11–25–2010
CHECKED	Sean	11–25–2010
APPROVED	Gary	11–25–2010

NOTES:

1. CABLE1: SEE SEC A–A, (HITACHI/#40974–11),CTG/#43093.
2. CONNECTOR: P1 & P2: DIN 15PIN FEMALE: SOLDER TYPE, GOLD FLASH CONTACTS, BLACK PBT INSULATION, ASSEMBLY TYPE, WITH METAL ASSEMBLY SHELL, WITHOUT KEY, NICKEL PLATED SHELL.
3. YELLOW HEAT SHRINK TUBE.
4. ALL MATERIALS ARE RoHS COMPLIANT.
5. TESTING: 100% ELECTRICAL TEST AT 10M OHM INSULATION RESISTANCE.
6. PACKING: 2 PCS RING (SEE "DETAIL A") IN A SMALL RapidRun ZIP–LOCK POLY–BAG [WITH RoHS AND "ASSEMBLY INSTRUCTIONS" (SEE DETAIL "B") MARK] WITH A CABLE IN A RapidRun ZIP–LOCK POLY–BAG. (WITH RoHS MARK)
   BAR CODE LABEL (WHITE BACKGROUND WITH BLACK LETTERS, SEE "DETAIL C") TO BE STAMPED ON POLY–BAG.
7. CABLE MARKING: LASTAR – 3 COAX 28AWG – 8C 26AWG – E330117 (UL) TYPE CMP c(UL) 75C –RoHS – Z/YY (XXXX) ZZZZ
   WHERE: Z=MONTH OF MFG.
   YY=YEAR OF MFG.
   XXXX=JOB NUMBER.
   ZZZZ=SEQUENTIAL FOOTAGE MARKING EVERY FOOT.

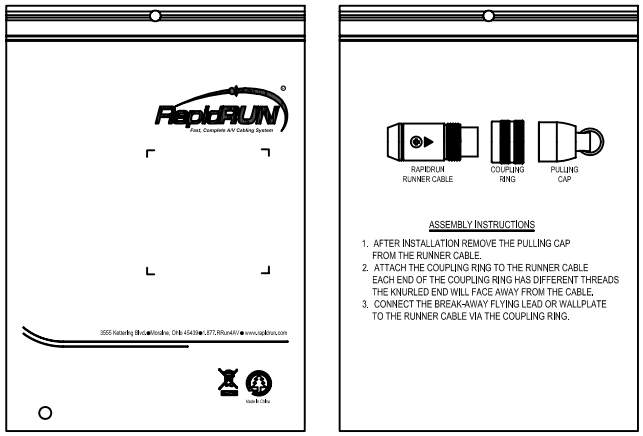

OBVERSE REAR

DETAIL B

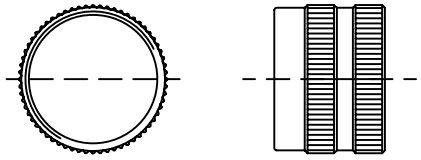

DETAIL A

MANUFACTURED IN CHINA

DRAWING APPROVED		DATE:	
SAMPLE APPROVED PER DRAWING SPECIFICATIONS		DATE:	

PROPRIETARY & CONFIDENTIAL. THE INFORMATION CONTAINED IN THIS DRAWING IS THE SOLE PROPERTY OF CABLES TO GO. ANY REPRODUCTION IN PART OR AS A WHOLE WITHOUT THE WRITTEN PERMISSION OF CABLES TO GO IS PROHIBITED.

mm		TITLE	DIN15P FEMALE TO DIN15P FEMALE
SCALE	NONE		
SHEET	3/4	CUS. NAME	CTG
DIMENSIONAL TOLERANCES UNLESS OTHERWISE NOTED		CUS. P/N	SEE "P/N CHART"
.X ±	.XX ±		
.XXX ±	ANGLES ±	DRAW NO.	P0602028–E
REV. D	CUS. REV		

☐ O
☒ S

CablesToGo™ Service Through Every Connection

ENG.	Togo	DATE	11–25–2010
CHECKED	Sean	DATE	11–25–2010
APPROVED	Gary	DATE	11–25–2010