INFORMATION

Eco-conscious 24” IPS monitor for modern workplaces

The ProLite X2493HSU is the ideal choice if you are looking for a compact, high-performance display that integrates effortlessly into a multi-monitor workspace. Its four-side ultra-slim bezel design creates a clean, modern aesthetic and delivers seamless visuals across multiple screens.

The IPS panel ensures sharp detail, accurate colour reproduction and wide viewing angles, while the 120Hz refresh rate provides a smooth and responsive user experience. Whether you are working on documents, editing content or browsing the web, flicker-free technology and a blue light reducer help reduce eye strain and improve long-term viewing comfort.

For convenience and efficiency, the X2493HSU features built-in speakers, a two-port USB hub, HDMI and DisplayPort inputs, and a headphone socket. This simplifies your desk setup and provides flexible connectivity for your devices.

With EPEAT registration, TCO10 Certified compliance and an Energy Label C rating, this monitor supports your sustainability objectives without compromising on performance.

Multi-screen setup for a panoramic workspace

Connect multiple ultra-slim bezel monitors to create a panoramic workspace, keep your apps in view, streamline multitasking, and boost productivity.

Versatile connectivity for all your devices

Connect multiple devices and accessories in one simple step with HDMI, DisplayPort and the USB hub, streamlining your workspace for maximum efficiency and ensuring a tidy, uninterrupted workflow.

Built-in audio without extra clutter

Enjoy clear, pleasant sound for calls, videos, and music while keeping your desk free of extra speakers, thanks to the integrated audio.

Reduced eye strain & fatigue

Work, study or play for longer with greater visual comfort. The Blue Light Reducer feature lets you lower blue light emissions through software settings, helping minimise eye strain during extended screen time. Combined with flicker-free technology, it supports a more comfortable viewing experience so you can stay focused throughout the day.

SPECIFICATION

01 DISPLAY CHARACTERISTICS

Design	4-side slim bezel
Diagonal	23.8", 60.5cm
Panel	IPS panel technology LED, matte finish
Native resolution	1920 x 1080 @120Hz (2.1 megapixel Full HD)
Aspect ratio	16:9
Panel brightness	350 cd/m²
Static contrast	1500:1
Advanced contrast	80M:1
Response time (MPRT)	1ms
Viewing zone	horizontal/vertical: 178°/178°, right/left: 89°/89°, up/down: 89°/89°
Colour support	16.7mln (sRGB: 96%; NTSC: 72%)
Horizontal Sync	30 - 140kHz
Viewable area W x H	527 x 296.5mm, 20.7 x 11.7"
Pixel pitch	0.275mm
Colour	matte, black

02 INTERFACES / CONNECTORS / CONTROLS

Signal input	HDMI x1 (v.1.4) DisplayPort x1 (v.1.2)
USB HUB	x2 (v. 2.0 (DC5V, 500mA))
HDCP	yes
Headphone connector	yes

03 FEATURES

Blue light reducer	yes
Flicker free	yes
Adaptive Sync support	HDMI/DP 1920x1080 @120Hz
Extra	i-Style colour
OSD languages	EN, DE, FR, ES, IT, RU, JP, CZ, NL, PL, UA
Control buttons	Joystick: Centre: Power/Menu, Up/Signal Select, Down, Left/Submenu, Right/Volume
User controls	picture adjust (brightness, contrast, ECO, ACR, OD, motion blur reduction, Adaptive Sync), colour settings (i-Style colour, blue light reducer, RGB range, colour temperature, user preset), OSD (OSD H. position, OSD V. position, OSD time, OSD background, DDC/CI control, display information), language, extra1 (sharpness, video mode adjust, opening logo, power LED), extra 2 (shortcut key, FW version), input select, audio settings (volume, mute audio), reset (reset all)
Speakers	2 x 2W
Convenience	Kensington-lock™ prepared, DDC/CI, DDC2B, Mac OSX

04 MECHANICAL

Display position adjustments	tilt
Tilt angle	20° up; 3° down
VESA mounting	100 x 100mm
Cable management system	yes

05 ACCESSORIES INCLUDED

Cables	power (1.8m), USB (1.5m), HDMI (1.5m)
Other	quick start guide, safety guide

06 POWER MANAGEMENT

Power supply unit	internal
Power supply	AC 100 - 249V, 50/60Hz
Power usage	12W default, 0.5W stand by, 0.3W off mode

07 SUSTAINABILITY

Regulations	TCO Certified, CE, TÜV-GS, EAC, VCCI-B, PSE, RoHS support, ErP, WEEE, REACH, UKCA
Energy efficiency class (Regulation (EU) 2017/1369)	C
EPEAT Silver	*registration varies by country, go to www.epeat.net for details
REACH SVHC	above 0.1%: Lead, Lead monoxide, Diboron trioxide

08 DIMENSIONS / WEIGHT

Product dimensions W x H x D	539 x 387 x 175mm
Box dimensions W x H x D	615 x 395 x 126mm
Weight (without box)	3.3kg
Weight (with box)	5.1kg
EAN code	4948570126606

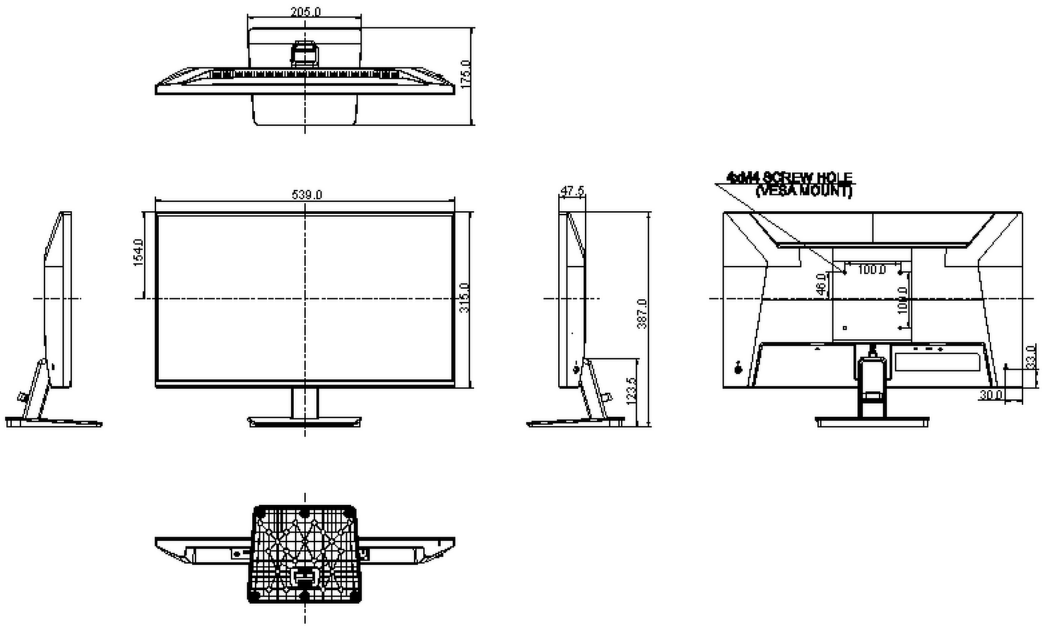
205.0
175.0
539.0
154.0
315.0
47.5
387.0
123.5
4xM4 SCREW HOLE
(VESA MOUNT)
100.0
46.0
100.0
33.0
30.0

GALLERY

iiyama
ProLite
X2493HSU
24"
60.5cm
IPS
1920x1080
SLIM BEZEL
2x2W

iiyama
ProLite
X2493HSU
24"
60.5cm
IPS
1920x1080
SLIM BEZEL
2x2W

iiyama
ProLite
X2493HSU
24"
60.5cm
IPS
1920x1080
SLIM BEZEL
2x2W

iiyama
ProLite
X2493HSU
24"
60.5cm
IPS
1920x1080
SLIM BEZEL
2x2W

iiyama
ProLite
X2493HSU
24"
60.5cm
IPS
1920x1080
SLIM BEZEL
2x2W

iiyama
ProLite
X2493HSU
24"
60.5cm
IPS
1920x1080
SLIM BEZEL
2x2W

iiyama

ProLite
X2493HSU

2x2W

24"
60.5cm
IPS
1920x1080
SLIM BEZEL
2x2W

24"
60.5cm
IPS
1920x1080
SLIM BEZEL

iiyama

All trademarks and registered trademarks acknowledged. E & O E. Specification subject to change without notice. All LCD's comply with ISO-9241-307:2008 in connection with pixel defects. **© IIYAMA CORPORATION. ALL RIGHTS RESERVED**