Overview

HP EliteBook 660 16 inch G11 Notebook PC

Front

1. Internal Microphone (2)
2. Webcam LED
3. Webcam
4. Camera Shutter
5. Touchpad
6. Near-field communication (NFC) *

* Select product only.

Overview

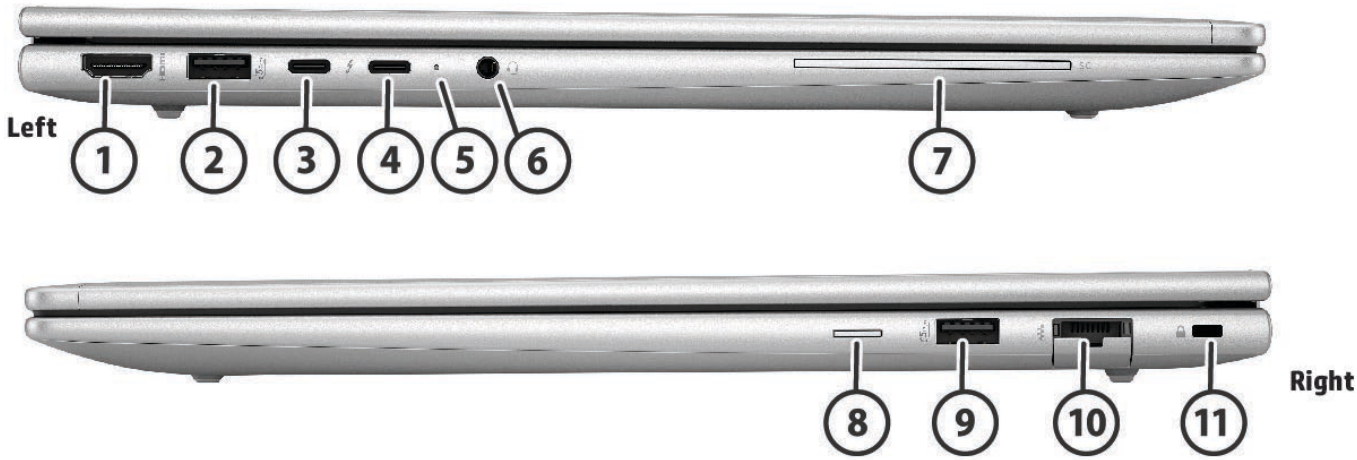

Sides

1. HDMI 2.1
2. Super Speed USB Type-A 5Gbps signaling rate Power charging
3. Thunderbolt™ 4 with USB Type-C® 40Gbps signaling rate (USB Power Delivery, DisplayPort™2.1)
4. Thunderbolt™ 4 with USB Type-C® 40Gbps signaling rate (USB Power Delivery, DisplayPort™2.1)
5. Power Indicator LED
6. Headphone/mic combo jack
7. Smart Card Reader (Optional)
8. Nano SIM card slot (Optional)
9. Super Speed USB Type-A 5Gbps signaling rate Data only
10. RJ45 Ethernet port
11. Security lock slot (Integrated)

1. SuperSpeed USB 20Gbps is not available with Thunderbolt™ 4.

Technical Specifications

PRODUCT NAME

HP EliteBook 660 16 inch G11 Notebook PC

OPERATING SYSTEMS

Preinstalled

Windows 11 Home - HP recommends Windows 11 Pro for business [1]
Windows 11 Home Single Language - HP recommends Windows 11 Pro for business [1]
Windows 11 Pro [1]
Windows 11 Pro Education [1]
Windows 11 Pro (Windows 11 Enterprise or Windows 10 Enterprise available with a Volume Licensing Agreement) [1]
FreeDOS

1. Not all features are available in all editions or versions of Windows. Systems may require upgraded and/or separately purchased hardware, drivers, software or BIOS update to take full advantage of Windows functionality. Windows is automatically updated and enabled. High speed internet and Microsoft account required. ISP fees may apply and additional requirements may apply over time for updates. See http://www.windows.com.

PROCESSORS

Processor [2,3,4,5,6,7]	Cores	Number of P-cores	Number of E-cores	Number of LP E-core	Threads	L3 Cache	Max Turbo Frequency [4]		Intel SIPP/ vPro® Enterprise	Intel vPro® Essentials
							P-cores	E-cores		
Intel® Core™ Ultra 7 processor 165U	12 cores	2	8	2	14	12 MB	4.90 GHz	3.80 GHz	X	
Intel® Core™ Ultra 7 processor 155U	12 cores	2	8	2	14	12 MB	4.80 GHz	3.80 GHz		
Intel® Core™ Ultra 5 processor 135U	12 cores	2	8	2	14	12 MB	4.40 Ghz	3.60 GHz	X	
Intel® Core™ Ultra 5 processor 125U	12 cores	2	8	2	14	12 MB	4.30 Ghz	3.60 GHz		X

Technical Specifications

Intel® Core™ Ultra 7 processor 165H	16 cores	6	8	2	22	24 MB	5.00 GHz	3.80 GHz	X	
Intel® Core™ Ultra 7 processor 155H	16 cores	6	8	2	22	24 MB	4.80 GHz	3.80 GHz		
Intel® Core™ Ultra 5 processor 135H	14 cores	4	8	2	18	18 MB	4.60 Ghz	3.60 GHz	X	
Intel® Core™ Ultra 5 processor 125H	14 cores	4	8	2	18	18 MB	4.50 Ghz	3.60 GHz		

Processor Family

Intel® Core™ Ultra7 processor

Intel® Core™ Ultra5 processor

2. Multicore is designed to improve performance of certain software products. Not all customers or software applications will necessarily benefit from use of this technology. Performance and clock frequency will vary depending on application workload and your hardware and software configurations. Intel's numbering, branding and/or naming is not a measurement of higher performance.

3. Processor speed denotes maximum performance mode; processors will run at lower speeds in battery optimization mode.

4. Intel® Turbo Boost performance varies depending on hardware, software and overall system configuration. See www.intel.com/technology/turboboost for more information.

5.In accordance with Microsoft's support policy, HP does not support the Windows 8 or Windows 7 operating system on products configured with Intel and AMD 7th generation and forward processors or provide any Windows 8 or Windows 7 drivers on http://www.support.hp.com

6. Intel vPro® requires Windows 10 Pro 64 bit or higher, a vPro supported processor, vPro enabled chipset, vPro enabled wired LAN and/or Wi-Fi 6E WLAN and TPM 2.0. Some functionality requires additional 3rd party software in order to run. Features of vPro® Essentials and Enterprise vary. See http://intel.com/vpro

7. Features and software that require a NPU may require software purchase, subscription or enablement by a software or platform provider, and third party software may have specific configuration or compatibility requirements. Performance varies by use, configuration, and other factors.

Technical Specifications

GRAPHICS

Integrated

Intel® ARC Graphics [8]

Intel® Graphics

Discrete

GeForce RTX 2050

Supports

UMA: Support HDMI 2.1 [9]

Discrete: Support HDMI 2.1

Hardware acceleration for CODEC H.265/HEVC (High Efficiency Video Coding) is disabled on this platform.

8. Intel® ARC™ graphics only available on select Intel® Core™Ultra H-series processor-powered systems with at least 16GB of system memory in dual channel configuration.
9. HDMI cable sold separately.

DISPLAY

Non-Touch

40.6 cm (16") diagonal, WUXGA (1920 x 1200), Bent, LCD, UWVA, anti-glare, LED, 300 nits, NTSC 45% [10,11]

40.6 cm (16") diagonal, WUXGA (1920 x 1200), Bent, LCD, UWVA, anti-glare, LED + Low Blue Light, 400 nits, low power, sRGB 100% [10,11]

40.6 cm (16") diagonal, WUXGA (1920 x 1200), Bent, LCD, UWVA, anti-glare, LED + Low Blue Light, 1000 nits, sRGB 100%, HP Sure View reflect integrated privacy screen [10,11]

Touch

40.6 cm (16") diagonal, WUXGA (1920 x 1200), Bent, LCD, touch, UWVA, anti-glare, LED, 300 nits, NTSC 45% [10,11,12]

Display Size (Diagonal)

40.6 cm (16.0")

Screen to Body Ratio

90.60%

Technical Specifications

Aspect Ratio

16.10

Max Hinge Open Angle

177±3°

10. Sold separately or as an optional feature.
11. Resolutions are dependent upon monitor capability, and resolution and color depth settings.
12. Actual brightness will be lower with touchscreen.

DOCKING (Sold Separately)

Docking station model #1	HP Thunderbolt 4 100W G6 Dock
Docking station model #2	HP USB-C Dock G5
Docking station model #3	HP Thunderbolt™ 120W G4 Dock
Docking station model #4	HP USB-C G5 Essential Dock
Docking station model #5	HP USB-C/A G2 Universal Dock

For additional aftermarket options and docking specs please see page 42.

Technical Specifications

STORAGE AND DRIVES

Primary Storage

2 TB PCIe® Gen4x4 NVMe™ SSD Three Layer Cell [13]

1 TB PCIe® Gen4x4 NVMe™ SSD Three Layer Cell [13]

1 TB PCIe® Gen4x4 NVMe™ Self Encrypted OPAL2 Three Layer Cell [13]

512 GB PCIe® Gen4x4 NVMe™ Self Encrypted OPAL2 SSD Three Layer Cell [13]

512 GB PCIe® Gen4x4 NVMe™ SSD Three Layer Cell [13]

512 GB PCIe® NVMe™ SSD Value [13]

256 GB PCIe® NVMe™ Self Encrypted OPAL2 SSD Value [13]

256 GB PCIe® NVMe™ SSD Value [13]

13. For storage drives, GB = 1 billion bytes. TB = 1 trillion bytes. Actual formatted capacity is less. Up to 30GB of disk is reserved for system recovery software.

MEMORY

Maximum Memory

64GB DDR5-5600 MT/s (2 x 32 GB) RAM [14]

Memory

64GB DDR5-5600 MT/s (2 x 32 GB) RAM [14]

32GB DDR5-5600 MT/s (2 x 16 GB) RAM [14]

32GB DDR5-5600 MT/s (1 x 32 GB) RAM [14]

24GB DDR5-5600 (1 x 24 GB) MT/s RAM [14]

16GB DDR5-5600 MT/s (2 x 8 GB) RAM [14]

16GB DDR5-5600 MT/s (1 x 16 GB) RAM [14]

12GB DDR5-5600 MT/s (1X12GB) [14]

8GB DDR5-5600 MT/s (1 x 8 GB) RAM [14]

Memory Slots

2 SODIMM

System runs at 5600 MT/s

Supports Dual Channel Memory[14]

14. Due to the non-industry standard nature of some third-party memory modules, we recommend HP branded memory to ensure compatibility. If you mix memory speeds, the system will perform at the lower memory speed.

Technical Specifications

NETWORKING/COMMUNICATIONS

Ethernet

Intel® I219-LM GbE, vPro® [15]

Intel® I219-V GbE, non-vPro® [15]

WLAN

Intel® AX211 Wi-Fi 6E Bluetooth® 5.3 wireless card vPro WLAN [16]

Intel® AX211 Wi-Fi 6E Bluetooth® 5.3 wireless card WLAN [16]

WWAN

HP 4G LTE-A Pro Cat16 WWAN eSIM [17]

LPWAN

Qualcomm® 9205 LTE-M (CAT-M1 fSVC)[18]

NFC

NFC Mirage WNC XRAV-1

Miracast

Native Miracast Support [19]

15. The term "10/100/1000" or "Gigabit" Ethernet indicates compatibility with IEEE standard 802.3ab for Gigabit Ethernet, and does not connote actual operating speed of 1 Gb/s. For high-speed transmission, connection to a Gigabit Ethernet server and network infrastructure is required.
16. Wi-Fi 6E requires a Wi-Fi 6E router, sold separately to function in the 6GHz band. Availability of public wireless access points limited. Wi-Fi 6E is backwards compatible with prior 802.11 specs. And available in countries where Wi-Fi 6E is supported.
17. WWAN module is an optional feature, requires factory configuration and requires separately purchased service contract. Check with service provider for coverage and availability in your area. Connection speeds will vary due to location, environment, network conditions, and other factors. 4G LTE not available on all products, in all regions.
18. Cat M1 LPWAN (Mobile Narrowband) cards support select platforms with the HP Protect & Trace with Wolf Connect service, but do not support mobile broadband/Internet use.
19. Miracast is a wireless technology your PC can use to project your screen to TVs, projectors, and streaming.

Technical Specifications

AUDIO/MULTIMEDIA

Audio

Audio by Poly Studio

2 Integrated stereo speakers

2 Integrated dual array microphones

Speaker Power

2W/4ohm per speaker

Camera

5MP+Infrared camera [20,21]

FHD camera [20,21]

Sensors

Ambient Light Sensor[22]

Hall Effect Sensor

Thermal Sensor

HP Tamper Lock

20.HD content required to view HD images.

21. Sold separately or as an optional feature.

22.Select product only (Privacy panel SKU).

KEYBOARDS/POINTING DEVICES/BUTTONS & FUNCTION KEYS

Keyboard

HP Standard Keyboard with numeric keypad, spill-resistant, backlit, Durakey keyboard. [23]

HP Standard Keyboard with numeric keypad, spill-resistant,Privacy, backlit, Durakey keyboard. [23]

HP Standard Keyboard with numeric keypad, spill-resistant keyboard.

Pointing Device

Clickpad with multi-touch gesture support

Microsoft Precision Touchpad Default Gestures Support

Function Keys

ESC: System Information

Technical Specifications

F1 - Display Switching
F2 - Blank or SureView On/Off
F3 - Brightness Down
F4 - Brightness Up
F5 - Blank or Backlit Toggle
F6 - Audio Mute
F7 - Volume Down
F8 - Volume Up
F9 - Mic Mute
F10 - Play and Pause
F11 - HPX key
F12 - Print Screen
Num Lock (with LED)
Power Button (with LED)
Insert
Delete
Home
End
Microsoft Copilot [24]

Hidden Function Keys
Fn+R - Break, Fn+S - Sys Rq, Fn+C - Scroll Lock

23. Backlit keyboard is an optional feature.
24. Requires Windows 11 and an NPU. Timing of feature delivery and availability varies by market and device. Requires Microsoft account to log in. Where Copilot in Windows is not available, the Copilot key will lead to the Bing search engine. See http://aka.ms/WindowsAIFeatures

SOFTWARE AND SECURITY

Software
Adobe Offer [25]
Bing Search for IE11
Buy Microsoft Office (Sold separately)
HP Connection Optimizer
HP Hotkey Support
HP Mac Address Manager

Technical Specifications

HP Notifications
HP PC Hardware Diagnostics UEFI
HP PC Hardware Diagnostics Windows
HP Power Manager with Battery Health Manager [26]
HP Privacy Settings
HP Services Scan [27]
HP Smart Support [28]
HP Support Assistant [29]
HSA Fusion for Commercial
HSA Telemetry for Commercial
Miro Offer [30]
myHP [31]
Poly Lens [32]

Manageability Features

HP Client Catalog (download) [33]
HP Client Management Script Library (download) [34]
HP Cloud Recovery [35]
HP Connect for Microsoft Endpoint Manager [36]
HP Driver Packs (download) [37]
HP Image Assistant (download) [38]
HP Manageability Integration Kit (download) [39]
HP Patch Assistant (download) [40]

Security Management

Secured-Core PC Enable [41]
Windows Hello Enhanced Sign-In Security (ESS)

HP Wolf Security for Business which includes:[42]

HP Sure Admin [43]
HP Sure Click [44]
HP Sure Recover [45]
HP Sure Run [46]
HP Sure Sense
HP Sure Start [47]
HP Tamper Lock

Security TPM

Model: STM ST33KTPM2X32CKE2
TCG TPM 2.0
Version: 1.769

Technical Specifications

FIPS 140-2 Compliant: Yes

Model: Nuvoton NPCT760HABYX
TCG TPM 2.0
Version: 7.2.3.1
FIPS 140-2 Compliant: Yes

BIOS
Absolute Persistence Module [48]
BIOS Update via Network
HP BIOSphere Gen6 [49]
HP DriveLock & Automatic DriveLock
HP Fingerprint Sensor [50]
HP Secure Erase [51]
HP Wake on WLAN

Smartcard Reader
Model number: Alcor AK9563
FIPS 201 Compliant: Yes

IPv6 Support
Yes

FirstNet Certified

Does the BIOS implement the ISO/IEC 19678:2015 (formerly NIST 800-147) guidelines?: Yes

UEFI version: 2.7B
HP BIOS UEFI Specification Level version 2.9 supported with BIOS update

Class: 3

25. Click on Adobe icon in the start menu to take advantage of a 30 day trial membership of select Adobe software. The software is tied to the device and is not transferrable. You may also choose to enter your payment details to auto-renew and continue to use the software beyond the 30 day trial. See Adobe for complete details.
26. HP Power Manager requires Windows 10 and higher and can be downloaded from the Microsoft Store. Depending on what version of HP Battery Health Manager (BHM) is available for your device, HP BHM may look at a number of factors to determine how to adjust battery charging over time to optimize battery health. HP BHM is preset to "Let HP Manage my Battery Charging" to allow the system to balance charging between battery health and battery duration. As Let HP Manage My Battery Charging adjusts charge capacity, the amount of run-time on battery will be reduced over time. HP may utilize BIOS updates to adjust BHM settings on select systems to optimize battery health and reduce exposure to those factors

Technical Specifications

that can accelerate battery degradation. To update or change HP BHM settings and for complete details, see https://support.hp.com/us-en/document/ish_4449597-3519507-16

27. HP Services Scan is preinstalled and/or provided thru Windows Update and checks for service entitlement on each hardware device and downloads the applicable software agent automatically. To disable this feature, please follow the instructions at http://www.hpdaas.com/requirements. The HP Insights agent is a telemetry and analytics platform that provides critical data around devices and applications and is not sold as a standalone service. HP follows stringent GDPR privacy regulations and is ISO27001, ISO27701, ISO27017 and SOC2 Type2 certified for Information Security. Internet access with connection to the HP Insights agent is required. For full system requirements, please visit http://www.hpdaas.com/requirements. Not available in China.

28. HP Smart Support requires the HP agent to be installed. For more information about how to enable or to download HP Smart Support, please visit http://www.hp.com/smart-support. HP Services Scan is provided thru Windows Update and will check entitlement on each hardware device to determine if an HP agent-enabled service has been purchased, and will download applicable software automatically. The HP agent is a telemetry and analytics platform that provides critical data around devices and applications and is not sold as a standalone service. HP follows stringent GDPR privacy regulations and is ISO27001, ISO27701, ISO27017 and SOC2 Type2 certified for Information Security. Internet access is required. For full system requirements or to disable this feature, please visit http://www.hpdaas.com/requirements.

29. HP Support Assistant is available on Windows. For more information, please visit www.support.hp.com/help/hp-support-assistant

30. HP customers qualify for a 90 day trail of Miro, this offer ends September 2025. Complete terms and conditions are provided by Miro when accepting the offer.

31. MyHP Requires Windows 10 or higher OS.

32. Poly Lens Desktop requires a Windows OS

33. HP Client Catalog can be downloaded from https://www.hp.com/us-en/solutions/client-management-solutions.html

34. HP Client Management Script Library can be downloaded from https://www.hp.com/us-en/solutions/client-management-solutions.html#tab=manageability-tools

35. HP Cloud Recovery is available for Z by HP, HP Elite and Pro desktops and laptops PCs with Intel® or AMD processors and requires an open, network connection. **NOTE:** You must back up important files, data, photos, videos, etc. before use to avoid loss of data. Detail please refer to: https://support.hp.com/us-en/computer.

36. HP Connect for Microsoft Endpoint Manager is available from the Azure Market Place for HP Pro, Elite, Z and Point-of-Sale PCs managed with Microsoft Endpoint Manager. Subscription to Microsoft Endpoint Manager required and sold separately. Network connection required.

37. HP Driver Packs can be downloaded from https://www.hp.com/us-en/solutions/client-management-solutions/drivers-pack.html

38. HP Image Assistant can be downloaded from https://ftp.ext.hp.com/pub/caps-softpaq/cmit/HPIA.html

39. HP Manageability Integration Kit can be downloaded from http://www8.hp.com/us/en/ads/clientmanagement/overview.html.

40. HP Patch Assistant available on select HP PCs with the HP Manageability Kit that are managed through Microsoft System Center Configuration Manager. HP Manageability Integration Kit can be downloaded from http://www8.hp.com/us/en/ads/clientmanagement/overview.html.

41. Secured-Core PC Enable requires an Intel® vPro®, AMD Ryzen™ Pro processor or Qualcomm® processor with SD850 or higher and requires 8 GB or more system memory. Secured-core PC is enabled from the factory.

42. HP Wolf Security for Business requires Windows 10 or 11 Pro or higher, includes various HP security features and is available on HP Pro, Elite, RPOS and Workstation products. See product details for included security features.

Technical Specifications

43. HP Sure Admin requires HP G8 or newer platforms, Windows 10 or higher, HP BIOS, HP Manageability Kit or KMS Service from http://www.hp.com/go/clientmanagement and HP Sure Admin Local Access Authenticator smartphone app from the Android or Apple store
44. HP Sure Click requires Windows 10 or 11 Pro or higher. See https://bit.ly/2PrLT6A_SureClick for complete details.
45. HP Sure Recover is available on select HP PCs and requires Windows 10 or Windows 11 and an open network connection.
You must back up important files, data, photos, videos, etc. before using HP Sure Recover to avoid loss of data. Network based recovery using Wi-Fi is only available on select PCs.
46. HP Sure Run is available on select HP PCs and requires Windows 10 and higher.
47. HP Sure Start is available on select HP PCs and requires Windows 10 and higher
48. Absolute firmware module is shipped turned off and can only be activated with the purchase a license subscription and full activation of the software agent. License subscriptions can be purchased for terms ranging multiple years. Service is limited, check with Absolute for availability outside the U.S. Certain conditions apply. For full details visit: https://www.absolute.com/about/legal/agreements/absolute/
49. HP BIOSphere Gen6 features may vary depending on the platform and configuration.
50. HP Fingerprint Reader is an optional feature that requires Windows 10 or 11 and must be configured at purchase.
51. HP Secure Erase implements the methods outlined in the National Institute of Standards and Technology Special Publication 800-88r "Clear" sanitation method. HP Secure Erase does not support platforms with Intel® Optane™.

Technical Specifications

POWER

Power Supply

HP Slim 100W USB Type-C® adapter [52]

HP Standard 65W USB Type-C® adapter [52]

HP Standard 65W USB Type-C® Halogen Free AC power adapter [52]

Battery

HP Long Life 3 cell 56Whr Polymer [53,54]

HP Long Life 3 cell 48Whr Polymer [53,54,55]

Compliant with UL 1642 Standard

Battery Recharge Time

Supports battery HP Fast Charge: approximately 50% in 30 minutes [56]

Power Cord

3-wire plug - 1m

Battery Life

Battery life Up to 13 hours and 52 minutes with 56whr battery (HP Long Life 3-Cell, 56 Whr Polymer, UMA graphic, Intel Ultra 7 U15, Display set to 250 nits display (on a 400-nit display), 2*8GB DDR5 memory, 256 GB SSD) Up to 12 hours and 36 minutes with 56whr battery (HP Long Life 3-Cell, 56 Whr Polymer, UMA graphic, Intel Ultra 7 H28, Display set to 250 nits display (on a 400-nit display), 2*8GB DDR5 memory, 256 GB SSD) Up to 9 hours and 35 minutes with 56whr battery (HP Long Life 3-Cell, 56 Whr Polymer, DSC graphic, Intel Ultra 7 H28, Display set to 250 nits display (on a 400-nit display), 2*8GB DDR5 memory, 256 GB SSD) Up to 12 hours and 13 minutes with 48whr battery (HP Long Life 3-Cell, 48 Whr Polymer, UMA graphic, Intel Ultra 7 U15 , Display set to 250 nits display (on a 400-nit display), 2*8GB DDR5 memory, 256 GB SSD)Up to 11 hours and 30 minutes with 48whr battery (HP Long Life 3-Cell, 48 Whr Polymer, UMA graphic, Intel Ultra 7 H28, Display set to 250 nits display (on a 400-nit display), 2*8GB DDR5 memory, 256 GB SSD)[57]

52. Availability may vary by country.

53. Battery is internal and not replaceable by customer. Serviceable by warranty.

54. Actual battery Watt-hours (Wh) will vary from design capacity. Battery capacity will naturally decrease with shelf life, time, usage, environment, temperature, system configuration, loaded apps, features, power management settings and other factors.

55. Only available for selected regions and selected configurations.

56. Recharges your battery up to 50% within 30 minutes when the system is off or in standby mode. Power adapter minimum of 65 watts required for battery capacities 56Whr or less. Power adapter minimum of 100 watts required for battery capacities greater than 56Whr and less than 83Whr. Power adapter minimum of 120 watts required for battery

Technical Specifications

capacities greater than 83Whr and less than 100Whr. After charging has reached 50% capacity, charging will return to normal. Charging time may vary +/-10% due to System tolerance. Upon initial startup, it is necessary to use an minimum 45 W adapter.

57. Mobile Mark 25 battery life will vary depending on various factors including product model, configuration, loaded applications, features, use, wireless functionality, and power management settings. The maximum capacity of the battery will naturally decrease with time and usage. See www.bapco.com for additional details.

Technical Specifications

WEIGHTS & DIMENSIONS

Product Weight

Starting at 1.75 kg (3.86 lb) with 56Whr battery [58]

Weight will vary by configuration. Does not include power adapter.

Product Dimensions (W x D x H)

359.4 mm (W) x 251.0 mm (D) x 10.9 mm (front) / 17 mm (rear)

(14.15 in x 9.88 in x 0.43 in (front) / 0.67 in (rear))

Maximum height 19.9mm (Plastic); 20.9mm (Metal)

Pallet Dimensions (W x D x H)

16" to 17" boxes (345mm height): 1200mm x 1000mm x 1200mm [59]

58. Weight will vary by configuration. Does not include power adapter.

59. Product packaging size varies based on options chosen. Please contact your HP representative for your packaging size

details. For detailed packaging information, access the HP Commercial Notebooks Packaging Guide.

PORTS/SLOTS

Left Side

1 Super Speed USB Type-A 5Gbps signaling rate Power charging

2 Thunderbolt™ 4 with USB Type-C® 40Gbps signaling rate (USB Power Delivery, DisplayPort™2.1) [60]

1 HDMI 2.1 [61]

1 Headphone/mic combo jack

1 Smart Card Reader (Integrated)

Right side

1 Super Speed USB Type-A 5Gbps signaling rate Data only

1 RJ45 Ethernet port

1 Nano SIM card slot (Optional)

1 Security lock slot (Integrated)

60. SuperSpeed USB 20Gbps signaling rate is not available with Thunderbolt™ 4.

61. HDMI cable sold separately.

Technical Specifications

SERVICE AND SUPPORT

1-year warranty and 90 day software limited warranty options depending on country. Batteries have a default one year limited warranty. Refer to http://www.hp.com/support/batterywarranty/ for additional battery information. On-site service and extended coverage is also available. HP Care Pack Services are optional extended service contracts that go beyond the standard limited warranties. To choose the right level of service for your HP product, use the HP Care Pack Services Lookup Tool at: http://www.hp.com/go/cpc. [62]

62. HP Care Packs are sold separately. Service levels and response times for HP Care Packs may vary depending on your geographic location. Service starts on date of hardware purchase. Restrictions and limitations apply. For details, visit http://www.hp.com/go/cpc. HP services are governed by the applicable HP terms and conditions of service provided or indicated to Customer at the time of purchase. Customer may have additional statutory rights according to applicable local laws, and such rights are not in any way affected by the HP terms and conditions of service or the HP Limited Warranty provided with your HP Product.

Technical Specifications

SYSTEM UNIT

Stand-Alone Power Requirements (AC Power)	
Nominal Operating Voltage	20.0V
Average Operating Power	W (TBD)
Max Operating Power	UMA 65W
	Discrete 100W
Temperature	
Operating	0° to 35° C (32° to 95° F) No sustained direct exposure to sunlight, System performance may be reduced above 32°C (89.6°F)
Non-operating	-20° to 60° C (-4° to 140° F) No sustained direct exposure to sunlight, System performance may be reduced above 32°C (89.6°F)
Relative Humidity	
Operating	10% to 90 % (non-condensing)
Non-operating	5% to 95 %, 38.7° C (101.6° F) maximum wet bulb temperature
Shock	
Operating	40 G, 2 ms, half-sine
Non-operating	240 G, 2 ms, half-sine
Random Vibration	
Operating	1.043 grams
Non-operating	3.500 grams
Altitude (unpressurized)	
Operating	3048 m (10000 ft)
Non-operating	12192 m (40000 ft)
Planned Industry Standard Certifications	
Regulatory Model Number	HSN-Q38C
CSA/UL 62368-1	Yes
ENERGY STAR®	Yes [63]
EPEAT®	EPEAT® Gold in the United States [64]
FCC/ICES/CISPR/VCCI	Yes
CE MARKING	Yes
GS Mark	Yes
	Related commodity should comply with ISO 9241 Standards.
China CCC/SRRC	Yes
Taiwan BSMI/NCC	Yes
Korea KCC/KC/KES	Yes
Ukraine NSoC/TEC	Yes
EAEU Compliance	Yes
Saudi Arabian Compliance	Yes
TCO	Yes
WW RoHS	Yes

Technical Specifications

Low Blue Light	Yes
MIL-STD 810H Testing	Yes[65]

63. Configurations of the HP EliteBook 660 G11 that are ENERGY STAR® qualified are identified as HP EliteBook 660 G11 ENERGY STAR on HP websites and on http://www.energystar.gov.
64. Based on US EPEAT® registration according to IEEE 1680.1-2018 EPEAT®. EPEAT® status varies by country. Visit http://www.epeat.net for more information.
65. MIL STD 810H testing is not intended to demonstrate fitness for U.S. Department of Defense contract requirements or for military use. Test results are not a guarantee of future performance under these test conditions. Accidental damage requires an optional HP Accidental Damage Protection Care Pack.

DISPLAYS

1. Actual brightness will be lower with touchscreen or HP Sure View.

NOTE: All specifications represent the typical specifications provided by HP's component manufacturers; actual performance may vary either higher or lower.

16.0 in WUXGA (1920 x 1200) Anti-Glare UWVA LED+LBL sRGB NB2Y 1000 eDP 1.3+PSR 100 PrivacyG4 Plus bent LCD Panel	**Outline Dimensions (W x H)**	349.980 x 225.420 (max)
	Active Area	344.680 x 215.420 (typ)
	Weight	310 (max)
	Diagonal Size	16
	Surface Treatment	Anti-Glare
	Touch Enabled	No
	Contrast Ratio	1500:1 (typ)
	Refresh Rate	60 Hz
	Brightness	1000 nits[1]
	Pixel Resolution - Format	1920 x1200 (WUXGA)
	Backlight	LED
	Pixel Resolution	RGB
	Color Gamut Coverage	sRGB 100%
	Color Depth	8
	Viewing Angle	UWVA 85/85/85/85
	Low Blue Light	Yes

16.0 in WUXGA (1920 x 1200) Anti-Glare UWVA LED+LBL sRGB NB2Y 400	**Outline Dimensions (W x H)**	350.680 x 226.470 (max)
	Active Area	344.678 x 215.424 (typ)
	Weight	330g (max)

Technical Specifications

eDP 1.4+PSR2 Low-Power 100 bent LCD Panel	**Diagonal Size**	16
	Surface Treatment	Anti-Glare
	Touch Enabled	No
	Contrast Ratio	1000:1(typ)
	Refresh Rate	60 Hz
	Brightness	400 nits[1]
	Pixel Resolution - Format	1920 x 1200 (WUXGA)
	Backlight	LED
	Pixel Resolution	RGB
	Color Gamut Coverage	sRGB 100%
	Color Depth	8
	Viewing Angle	UWVA 89/89/89/89
	Low Blue Light	Yes
	Power Consumption (W, EBL@ 150nits max/ 200nits max))	1.60 (max)/ 1.95 (max)

16.0 in WUXGA (1920 x 1200) Anti-Glare UWVA LED NTSC 45 NB2X 300 eDP 1.2 w/o PSR bent LCD Panel	**Outline Dimensions (W x H)**	350.680 x 226.470 (max)
	Active Area	344.6784x215.424 (typ)
	Weight	390g (max)
	Diagonal Size	16
	Surface Treatment	Anti-Glare
	Touch Enabled	No
	Contrast Ratio	1000:1(typ)
	Refresh Rate	60 Hz
	Brightness	300 nits[1]
	Pixel Resolution - Format	1920 x 1280 (WUXGA)
	Backlight	LED
	Pixel Resolution	RGB
	Color Gamut Coverage	NTSC 45%
	Color Depth	6 bits + 2FRC

Technical Specifications

	Viewing Angle	UWVA 89/89/89/89
	Low Blue Light	Yes
	Power Consumption (W, EBL@ 150nits max/ 200nits max))	2.7 (max)/3.4 (max)

16.0 in WUXGA (1920 x 1200) Anti-Glare UWVA LED NTSC 45 NB2X 300 TOP eDP 1.2 w/o PSR bent LCD Panel	**Outline Dimensions (W x H)**	350.680 x 226.470 (max)
	Active Area	344.6784x215.424 (typ)
	Weight	390g (max)
	Diagonal Size	16
	Surface Treatment	Anti-Glare
	Touch Enabled	Yes
	Contrast Ratio	1000:1 (typ)
	Refresh Rate	60 Hz
	Brightness	300 nits[1]
	Pixel Resolution - Format	1920 x 1280 (WUXGA)
	Backlight	LED
	Pixel Resolution	RGB
	Color Gamut Coverage	NTSC 45%
	Color Depth	6 bits + 2FRC
	Viewing Angle	UWVA 89/89/89/89
	Low Blue Light	No
	Power Consumption (W, EBL@ 150nits max/ 200nits max))	2.7 (max)/3.24 (max)

STORAGE AND DRIVES

For storage drives, GB = 1 billion bytes. TB = 1 trillion bytes. Actual formatted capacity is less. Up to 30 GB (for Windows 10 and 11) is reserved for system recovery software.

SSD 512GB 2280 PCIe-4x4 NVMe Three Layer Cell	**Form Factor**	M.2 2280
	Capacity	512GB
	NAND Type	TLC
	Interface	PCIe NVMe Gen4X4
	Maximum Sequential Read	6400 MB/s ±20%

Technical Specifications

	Maximum Sequential Write	3500 MB/s ±20%
	Logical Blocks	1,000,215,215
	Features	Pyrite 2.0; TRIM; L1.2
SSD 1TB 2280 PCIe-4x4 NVMe Three Layer Cell	**Form Factor**	M.2 2280
	Capacity	1TB
	NAND Type	TLC
	Interface	PCIe NVMe Gen4X4
	Maximum Sequential Read	6400 MB/s ±20%
	Maximum Sequential Write	5000 MB/s ±20%
	Logical Blocks	2,000,409,264
	Features	Pyrite 2.0; TRIM; L1.2
SSD 2TB 2280 PCIe-4x4 NVMe Three Layer Cell	**Form Factor**	M.2 2280
	Capacity	2TB
	NAND Type	TLC
	Interface	PCIe NVMe Gen4X4
	Maximum Sequential Read	6400 MB/s ±20%
	Maximum Sequential Write	5000 MB/s ±20%
	Logical Blocks	4,000,797,360
	Features	Pyrite 2.0; TRIM; L1.2
256GB PCIe 2280 NVMe Self Encrypted OPAL2 Value Solid State Drive	**Form Factor**	M.2 2280
	Capacity	256GB
	NAND Type	TLC
	Interface	PCIe NVMe Gen4X4
	Maximum Sequential Read	2000 MB/s ±20%
	Maximum Sequential Write	900 MB/s ±20%
	Logical Blocks	500,118,192

Technical Specifications

	Features	TCG Opal 2.0; TRIM; L1.2
512GB PCIe-4x4 2280 NVME Self Encrypted OPAL2 Three Layer Cell Solid State Drive	**Form Factor**	M.2 2280
	Capacity	512GB
	NAND Type	TLC
	Interface	PCIe NVMe Gen4X4
	Maximum Sequential Read	6400 MB/s ±20%
	Maximum Sequential Write	3500 MB/s ±20%
	Logical Blocks	1,000,215,215
	Features	TCG Opal 2.0; TRIM; L1.2
SSD 256GB 2280 PCIe NVMe Value	**Form Factor**	M.2 2280
	Capacity	256 GB
	NAND Type	TLC
	Interface	PCIe NVMe Gen4X4
	Maximum Sequential Read	2000 MB/s ±20%
	Maximum Sequential Write	900 MB/s ±20%
	Logical Blocks	500,118,192
	Features	Pyrite 2.0; TRIM; L1.2
SSD 512GB 2280 PCIe NVMe Value	**Form Factor**	M.2 2280
	Capacity	512 GB
	NAND Type	TLC
	Interface	PCIe NVMe Gen4X4
	Maximum Sequential Read	2200 MB/s ±20%
	Maximum Sequential Write	1000 MB/s ±20%
	Logical Blocks	1,000,215,215
	Features	Pyrite 2.0; TRIM; L1.2

Technical Specifications

1TB PCIe-4x4 2280 NVME Self Encrypted OPAL2 Three Layer Cell Solid State	**Form Factor**	M.2 2280
	Capacity	1 TB
	NAND Type	TLC
	Interface	PCIe NVMe Gen4X4
	Maximum Sequential Read	6400 MB/s ±20%
	Maximum Sequential Write	5000 MB/s ±20%
	Logical Blocks	2,000,409,264
	Features	Pyrite 2.0, TRIM; L1.2

NETWORKING/COMMUNICATIONS

Intel® AX211 Wi-Fi 6E Bluetooth® 5.3 wireless card vPro® WLAN [1]	**Wireless LAN Standards**	IEEE 802.11a IEEE 802.11ac IEEE 802.11ax IEEE 802.11b IEEE 802.11d IEEE 802.11e IEEE 802.11g IEEE 802.11h IEEE 802.11i IEEE 802.11k IEEE 802.11n IEEE 802.11r IEEE 802.11v
	Interoperability	Wi-Fi certified
	Frequency Band	▪ 802.11b/g/n/ax 2.402 - 2.482 GHz ▪ 802.11a/n/ac/ax 4.9 - 4.95 GHz (Japan) 5.15 - 5.25 GHz 5.25 - 5.35 GHz 5.47 - 5.725 GHz 5.825 - 5.850 GHz 5.955 - 6.415 GHz 6.435 - 6.515 GHz

Technical Specifications

	6.535 – 6.875 GHz 6.895 – 7.115 GHz
Data Rates	▪ 802.11a: 6, 9, 12, 18, 24, 36, 48, 54 Mbps ▪ 802.11ac : MCS0 ~ MCS9, (20MHz, 40MHz, 80MHz, 160MHz) ▪ 802.11ax : MCS0 ~ MCS11, (20MHz, 40MHz, 80MHz, 160MHz) ▪ 802.11b: 1, 2, 5.5, 11 Mbps ▪ 802.11g: 6, 9, 12, 18, 24, 36, 48, 54 Mbps ▪ 802.11n: MCS 0 ~ MCS 15, (20MHz, 40MHz)
Modulation	Direct Sequence Spread Spectrum 1024QAM, 16-QAM, 256-QAM, 4096QAM, 64-QAM, BPSK, CCK, OFDM, QPSK
Security[2]	▪ 802.1x authentication ▪ AES-CCMP: 128 bit in hardware ▪ IEEE 802.11i ▪ IEEE and WiFi certified 64 / 128 bit WEP encryption for a/b/g mode only ▪ WAPI ▪ WPA, WPA2: 802.1x. WPA-PSK, WPA2-PSK, TKIP, and AES. ▪ WPA2 certification ▪ WPA3 (personal) certification
Network Architecture	Ad-hoc (Peer to Peer)
Models	Infrastructure (Access Point Required)
Roaming	IEEE 802.11 compliant roaming between access points
Output Power[3]	▪ 802.11b : +17dBm minimum ▪ 802.11g : +16dBm minimum ▪ 802.11a : +17dBm minimum ▪ 802.11n HT20(2.4GHz) : +14dBm minimum ▪ 802.11n HT40(2.4GHz) : +13dBm minimum ▪ 802.11n HT20(5GHz) : +14dBm minimum ▪ 802.11n HT40(5GHz) : +13dBm minimum ▪ 802.11ac VHT80(5GHz) : +10dBm minimum ▪ 802.11ac VHT160(5GHz) : +10dBm minimum ▪ 802.11ax HE40(2.4GHz) : +12dBm minimum ▪ 802.11ax HE80(5GHz) : +10dBm minimum ▪ 802.11ax HE160(5GHz) : +10dBm minimum

Technical Specifications

Power Consumption	▪ Transmit mode : 2.3 W ▪ Receive mode : 1.6 W ▪ Idle mode (PSP) : 180 mW (WLAN Associated) ▪ Idle mode: 50 mW (WLAN unassociated) ▪ Connected Standby/Modern Standby : 10 mW ▪ Radio disabled : 8 mW
Power Management	ACPI and PCI Express compliant power management
Receiver Sensitivity[4]	▪ 802.11b, 1Mbps : -93.5dBm maximum ▪ 802.11b, 11Mbps : -84dBm maximum ▪ 802.11a/g, 6Mbps : -86dBm maximum ▪ 802.11a/g, 54Mbps : -72dBm maximum ▪ 802.11n, MCS07 : -67dBm maximum ▪ 802.11n, MCS15 : -64dBm maximum ▪ 802.11ac, MCS0(VHT80) : -84dBm maximum ▪ 802.11ac, MCS9(VHT80) : -59dBm maximum ▪ 802.11ac, MCS9(VHT160) : -58.5dBm maximum ▪ 802.11ax, MCS11(HE40): -57dBm maximum ▪ 802.11ax, MCS11(HE80): -54dBm maximum ▪ 802.11ax, MCS11(HE160): -53.5dBm maximum
Antenna type	High efficiency antenna with spatial diversity Two embedded tri-band 2.4/5/6 GHz antennas are provided to the card to support WLAN MIMO communications and Bluetooth® communications
Form Factor	PCI-Express M.2 MiniCard
Dimensions	30.00 x 22.00 x 2.30 mm (1.18 x 0.87 x 0.09 inch)
Weight	1. Type 2230: 2.8 g 2. Type 1216: 1.3 g
Operating Voltage	3.3 v +/- 9 %
LED Activity	LED Amber – Radio OFF; LED OFF – Radio ON

HP Integrated Module with Bluetooth® 4.0/4.1/4.2/5.0/5.1/5.2/5.3 Wireless Card Technology

Bluetooth® Specification	4.0/4.1/4.2/5.0/5.1/5.2/5.3 Compliant
Frequency Band	2402 to 2480 MHz
Number of Available Channels	Legacy: 0~79 (1 MHz/CH) BLE: 0~39 (2 MHz/CH)
Signaling Data Rate	Legacy : 3 Mbps data rate; throughput up to 2.17 Mbps

Technical Specifications

	BLE : 1 Mbps data rate; throughput up to 0.2 Mbps Legacy : Synchronous Connection Oriented links up to 3, 64 kbps, voice channels Legacy : Asynchronous Connection Less links 2178.1 kbps/177.1 kbps asymmetric (3-DH5) or 864 kbps symmetric (3-EV5)
Transmit Power	The Bluetooth® component shall operate as a Class II Bluetooth® device with a maximum transmit power of + 4 dBm for BR and EDR.
Power Consumption	Peak (Tx): 330 mW Peak (Rx): 230 mW Selective Suspend: 17 mW
Bluetooth® Software Supported	Microsoft Windows Bluetooth® Software
Link Topology	
Power Management	Microsoft Windows ACPI, and USB Bus Support
Certifications	FCC (47 CFR) Part 15C/E, Section 15.247, 15.249, 15.407; ETSI 300 328, ETSI 301 893, ETSI 303 687
Bluetooth® Profiles Supported	2Mbps LE Advanced Audio Distribution Profile (A2DP) Basic Imaging Profile (BIP) Bluetooth® 4.1-ESR 5/6/7 Compliance Bluetooth® 4.2 ESR08 Compliance Bluetooth® 5.2 Bluetooth® 5.3 Wireless Card Channel Selection Algo Encryption key size control enhancements ESR9/10 Compliance FAX Profile (FAX) Hands Free Profile (HFP) Headset Profile (HSP) LE Advertisement Extensions LE Data Packet Length Extension LE Dual Mode LE L2CAP Connection Oriented Channels LE Link Layer LE Link Layer Ping LE Long Range LE Low Duty Cycle Directed Advertising LE Privacy 1.2 - Extended Scanner Filter Policies LE Privacy 1.2 - Link Layer Privacy LE Secure Connection- Basic/Full Limited High Duty Cycle Non-Connectable Advertising

Technical Specifications

		Periodic Advertisement interval Train Nudging & Interlaced Scan Windows Bluetooth® profiles support

1. Wi-Fi 6E requires a Wi-Fi 6E router, sold separately, to function in the 6GHz band. Availability of public wireless access points limited. Wi-Fi 6E is backwards compatible with prior 802.11 specs. And available in countries where Wi-Fi 6E is supported. Wi-Fi 6E is designed to support gigabit data rate when transferring files between two devices connected to the same router. Requires a wireless router, sold separately, that supports 80MHz and higher channels.
2. Check latest software/driver release for updates on supported security features.
3. The FCC has declared as of September 1, 2014 products that utilize passive scanning on channel 12/13 and are capable of transmitting must fully comply with requirements of 15.247 or otherwise disable those channels.
4. Receiver sensitivity is measured at a packet error rate of 8% for 802.11b (CKK modulation) and a packet error rate of 10% for 802.11a/g (OFDM modulation).

Intel® AX211 Wi-Fi 6E Bluetooth® 5.3 wireless card WLAN [1]	**Wireless LAN Standards**	IEEE 802.11a IEEE 802.11ac IEEE 802.11ax IEEE 802.11b IEEE 802.11d IEEE 802.11e IEEE 802.11g IEEE 802.11h IEEE 802.11i IEEE 802.11k IEEE 802.11n IEEE 802.11r IEEE 802.11v
	Interoperability	Wi-Fi certified
	Frequency Band	▪ 802.11b/g/n/ax 2.402 - 2.482 GHz ▪ 802.11a/n/ac/ax 4.9 - 4.95 GHz (Japan) 5.15 - 5.25 GHz 5.25 - 5.35 GHz 5.47 - 5.725 GHz 5.825 - 5.850 GHz

Technical Specifications

	5.955 – 6.415 GHz 6.435 – 6.515 GHz 6.535 – 6.875 GHz 6.895 – 7.115 GHz
Data Rates	▪ 802.11a: 6, 9, 12, 18, 24, 36, 48, 54 Mbps ▪ 802.11ac : MCS0 ~ MCS9, (20MHz, 40MHz, 80MHz, 160MHz) ▪ 802.11ax : MCS0 ~ MCS11, (20MHz, 40MHz, 80MHz, 160MHz) ▪ 802.11b: 1, 2, 5.5, 11 Mbps ▪ 802.11g: 6, 9, 12, 18, 24, 36, 48, 54 Mbps ▪ 802.11n: MCS 0 ~ MCS 15, (20MHz, 40MHz)
Modulation	Direct Sequence Spread Spectrum 1024QAM, 16-QAM, 256-QAM, 64-QAM, BPSK, CCK, Direct Sequence Spread Spectrum, OFDM, QPSK
Security[2]	▪ 802.1x authentication ▪ AES-CCMP: 128 bit in hardware ▪ IEEE 802.11i ▪ IEEE and WiFi certified 64 / 128 bit WEP encryption for a/b/g mode only ▪ WAPI ▪ WPA, WPA2: 802.1x. WPA-PSK, WPA2-PSK, TKIP, and AES. ▪ WPA2 certification ▪ WPA3 (personal) certification
Network Architecture	Ad-hoc (Peer to Peer)
Models	Infrastructure (Access Point Required)
Roaming	IEEE 802.11 compliant roaming between access points
Output Power[3]	▪ 802.11b : +17dBm minimum ▪ 802.11g : +16dBm minimum ▪ 802.11a : +17dBm minimum ▪ 802.11n HT20(2.4GHz) : +14dBm minimum ▪ 802.11n HT40(2.4GHz) : +13dBm minimum ▪ 802.11n HT20(5GHz) : +14dBm minimum ▪ 802.11n HT40(5GHz) : +13dBm minimum ▪ 802.11ac VHT80(5GHz) : +10dBm minimum ▪ 802.11ac VHT160(5GHz) : +10dBm minimum ▪ 802.11ax HE40(2.4GHz) : +12dBm minimum ▪ 802.11ax HE80(5GHz) : +10dBm minimum ▪ 802.11ax HE160(5GHz) : +10dBm minimum

Technical Specifications

Power Consumption	Transmit mode : 2.3 W Receive mode : 1.6 W Idle mode (PSP) : 180 mW (WLAN Associated) Idle mode: 50 mW (WLAN unassociated) Connected Standby/Modern Standby : 10 mW Radio disabled : 8 mW
Power Management	ACPI and PCI Express compliant power management
Receiver Sensitivity[4]	▪ 802.11b, 1Mbps : -93.5dBm maximum ▪ 802.11b, 11Mbps : -84dBm maximum ▪ 802.11a/g, 6Mbps : -86dBm maximum ▪ 802.11a/g, 54Mbps : -72dBm maximum ▪ 802.11n, MCS07 : -67dBm maximum ▪ 802.11n, MCS15 : -64dBm maximum ▪ 802.11ac, MCS0(VHT80) : -84dBm maximum ▪ 802.11ac, MCS9(VHT80) : -59dBm maximum ▪ 802.11ac, MCS9(VHT160) : -58.5dBm maximum ▪ 802.11ax, MCS11(HE40): -57dBm maximum ▪ 802.11ax, MCS11(HE80): -54dBm maximum ▪ 802.11ax, MCS11(HE160): -53.5dBm maximum
Antenna type	High efficiency antenna with spatial diversity Two embedded tri-band 2.4/5/6 GHz antennas are provided to the card to support WLAN MIMO communications and Bluetooth® communications
Form Factor	PCI-Express M.2 MiniCard
Dimensions	30.00 x 22.00 x 2.30 mm (1.18 x 0.87 x 0.09 inch)
Weight	1. Type 2230: 2.8 g 2. Type 1216: 1.3 g
Operating Voltage	3.3v +/- 9%
LED Activity	LED Amber – Radio OFF; LED OFF – Radio ON

HP Integrated Module with Bluetooth® 4.0/4.1/4.2/5.0/5.1/5.2/5.3 Wireless Card Technology

Bluetooth® Specification	4.0/4.1/4.2/5.0/5.1/5.2/5.3 Compliant
Frequency Band	2402 to 2480 MHz
Number of Available Channels	Legacy : 0~79 (1 MHz/CH) BLE : 0~39 (2 MHz/CH)
Signaling Data Rate	Legacy : 3 Mbps data rate; throughput up to 2.17 Mbps

Technical Specifications

	BLE : 1 Mbps data rate; throughput up to 0.2 Mbps Legacy : Synchronous Connection Oriented links up to 3, 64 kbps, voice channels Legacy : Asynchronous Connection Less links 2178.1 kbps/177.1 kbps asymmetric (3-DH5) or 864 kbps symmetric (3-EV5)
Transmit Power	The Bluetooth® component shall operate as a Class II Bluetooth® device with a maximum transmit power of + 4 dBm for BR and EDR.
Power Consumption	Peak (Tx): 330 mW Peak (Rx): 230 mW Selective Suspend: 17 mW
Bluetooth® Software Supported	Microsoft Windows Bluetooth® Software
Link Topology	
Power Management	Microsoft Windows ACPI, and USB Bus Support
Certifications	FCC (47 CFR) Part 15C/E, Section 15.247, 15.249, 15.407; ETSI 300 328, ETSI 301 893, ETSI 303 687
Bluetooth® Profiles Supported	2Mbps LE Advanced Audio Distribution Profile (A2DP) Basic Imaging Profile (BIP) Bluetooth® 4.1-ESR 5/6/7 Compliance Bluetooth® 4.2 ESR08 Compliance Bluetooth® 5.2 Bluetooth® 5.3 Wireless Card Channel Selection Algo Encryption key size control enhancements ESR9/10 Compliance FAX Profile (FAX) Hands Free Profile (HFP) Headset Profile (HSP) LE Advertisement Extensions LE Data Packet Length Extension LE Dual Mode LE L2CAP Connection Oriented Channels LE Link Layer LE Link Layer Ping LE Long Range LE Low Duty Cycle Directed Advertising LE Privacy 1.2 - Extended Scanner Filter Policies LE Privacy 1.2 - Link Layer Privacy LE Secure Connection- Basic/Full Limited High Duty Cycle Non-Connectable Advertising

Technical Specifications

		Periodic Advertisement interval Train Nudging & Interlaced Scan Windows Bluetooth® profiles support

1. Wi-Fi 6E requires a Wi-Fi 6E router, sold separately, to function in the 6GHz band. Availability of public wireless access points limited. Wi-Fi 6E is backwards compatible with prior 802.11 specs. And available in countries where Wi-Fi 6E is supported. Wi-Fi 6E is designed to support gigabit data rate when transferring files between two devices connected to the same router. Requires a wireless router, sold separately, that supports 80MHz and higher channels.
2. Check latest software/driver release for updates on supported security features.
3. The FCC has declared as of September 1, 2014 products that utilize passive scanning on channel 12/13 and are capable of transmitting must fully comply with requirements of 15.247 or otherwise disable those channels.
4. Receiver sensitivity is measured at a packet error rate of 8% for 802.11b (CKK modulation) and a packet error rate of 10% for 802.11a/g (OFDM modulation).

HP 4G LTE-A Pro Cat16 WWAN eSIM[1]	**Technology/Operating bands**	WCDMA/HSPA+ operating bands: Band 1: 1920 to 1980 MHz (UL), 2110 to 2170 MHz (DL) Band 2: 1850 to 1910 MHz (UL), 1930 to 1990 MHz (DL) Band 4: 1710 to 1755 MHz (UL), 2110 to 2155 MHz (DL) Band 5: 824 to 849 MHz (UL), 869 to 894 MHz (DL) Band 8: 880 to 915 MHz (UL), 925 to 960 MHz (DL) LTE FDD/TDD operating bands: Band 1: 1920 to 1980 MHz (UL), 2110 to 2170 MHz (DL) Band 12: 699 to 716 MHz (UL), 729 to 746 MHz (DL) Band 13: 777 to 787 MHz (UL), 746 to 756 MHz (DL) Band 14: 788 to 798 MHz (UL), 758 to 768 MHz (DL) Band 17: 704 to 716 MHz (UL), 734 to 746 MHz (DL) Band 18: 815 to 830 MHz (UL), 860 to 875 MHz (DL) Band 19: 830 to 845 MHz (UL), 875 to 890 MHz (DL) Band 2: 1850 to 1910 MHz (UL), 1930 to 1990 MHz (DL) Band 20: 832 to 862 MHz (UL), 791 to 821 MHz (DL) Band 25: 1850 to 1915 MHz (UL), 1930 to 1995 MHz (DL) Band 26: 814 to 849 MHz (UL), 859 to 894 MHz (DL) Band 28: 703 to 748 MHz (UL), 758 to 803 MHz (DL) Band 29: 717 to 728 MHz (DL) Band 3: 1710 to 1785 MHz (UL), 1805 to 1880 MHz (DL) Band 30: 2305 to 2315 MHz (UL) 2350 to 2360 MHz (DL) Band 32: 1452 to 1496 MHz (DL) Band 34: 2010 to 2025 MHz (UL/DL) Band 38: 2570 to 2620 MHz (UL/DL) Band 39: 1880 to 1920 MHz (UL/DL)

Technical Specifications

	Band 4: 1710 to 1755 MHz (UL), 2110 to 2155 MHz (DL) Band 40: 2300 to 2400 MHz (UL/DL) Band 41: 2496 to 2690 MHz (UL/DL) Band 42: 3400 to 3600 MHz (UL/DL) Band 43: 3400 to 3800 MHz (UL/DL) Band 48: 3550 to 3700 MHz (UL/DL) Band 5: 824 to 849 MHz (UL), 869 to 894 MHz (DL) Band 66: 1710 to 1800 MHz (UL), 2110 to 2200 MHz (DL) Band 7: 2500 to 2570 MHz (UL), 2620 to 2690 MHz (DL) Band 71: 663 to 698 MHz (UL), 617 to 652 MHz (DL) Band 8: 880 to 915 MHz (UL), 925 to 960 MHz (DL)
Wireless protocol standards	3GPP LTE Rel15 LTE Specification, 100MHz 5 DLCA, 256 QAM, DL 1.0Gbps (CAT16)/ 40MHz 2 ULCA, 256 QAM, UL 211Mbps (CAT18) WCDMA 3GPP Release 8 UMTS Specification, DL UMTS: 384 kbps/UL 384 kbp, DL DC-HSPA+: 42 Mbps (CAT24)/UL 11.5 Mbps (CAT7) WCDMA R99, 3GPP Release 5, 6, 7 and 8 UMTS Specification
GPS	Standalone/A-GPS (MS-A, MS-B)
GPS bands	GPS L1 (1575.42MHz), GLONASS L1 (1602MHz), Beidou B1 (1561.098MHz), Galileo E1 (1575.42MHz), QZSS (1575.42MHz)
Maximum data rates	DC-HSPA+: 42.00 Mbps(Download), 11.50 Mbps (Upload)
Maximum output power	HSPA+: 23.5 dBm LTE (all bands except B41): 23.0 dBm
Maximum power consumption	LTE: 1,300 mA (peak); 1,100 mA (average) HSPA+: 1,100 mA (peak); 800 mA (average)
Form Factor	M.2; 3052-S3 Key B
Weight	8.0 g (0.282 oz)
Dimensions (Length x Width x Thickness)	52.00 x 30.00 x 2.30 mm (2.05 x 1.18 x 0.09 inch)
embedded eSIM	Support

1. Mobile Broadband is an optional feature. Connection requires wireless data service contract, network support, and is not available in all areas. Contact service provider to determine the coverage area and availability. Connection speeds will vary due to location, environment, network conditions, and other factors. 4G LTE not available on all products or in all countries..

Technical Specifications

NFC NXP NPC300	**Dimensions (L x W x H)**	17.00 x 10.00 x 2.00 mm (0.67 x 0.39 x 0.08 inch)
	Chipset	NPC300
	System interface	I2C
	NFC RF standards	ISO/IEC 14443 A ISO/IEC 14443 B ISO/IEC 15693 ISO/IEC 18092 ECMA-340 NFCIP-1 Target and Initiator ECMA-320 NFCIP-2
	NFC Forum Support	Type 1, Type 2, Type3 / Type 4, NFCIP-1 and NFCIP-2
	Reader (PCD-VCD) Mode	ISO/IEC 14443 A ISO/IEC 14443 B ISO/IEC 15693 MIFARE 1K MIFARE 4K MIFARE DESFire FeliCa Jewel and Topaz
	Card Emulation (PICC-VICC) Mode	ISO/IEC 14443 A ISO/IEC 14443 B and B' MIFARE FeliCa
	Frequency	13.56 MHz
	NFC Modes Supported	Reader/Writer, Peer-to-Peer
	Raw RF Data Rates	106, 212, 424, 848 kbps
	Operating temperature	Operating: 0 °C to 70 °C (32 °F to 158 °F) Storage: -20 °C to 125 °C (-4 °F to 257 °F)
	Humidity	Operating: 10% - 90% (non-condensing) Non-Operating: 5% - 95% (non-condensing)
	Supply Operating voltage	4.35 to 5.25 Volts
	I/O Voltage	1.8V or 3.3V
	Power Consumption (Booster enable, VBAT= 3.3V, VCC_BOOST = 5V)	
	Mode	Power Consumption, Typical
	Polling	7.3 mA

Technical Specifications

Detected Test Tag Type 1	Total 283.8 mA Net Module 236.8 mA
Detected Test Tag Type 2	Total 288.8 mA Net Module 241.8 mA
Detected Test Tag Type 3	Total 287.7 mA Net Module 240.7 mA
Detected Test Tag Type 4	Total 282.3 mA Net Module 235.3 mA
Antenna	Antenna connector, 0.5mm pitch, 7 connector FPC. Antenna matching is external to module.

Intel® I219-LM 1 Gigabit Network Connection LOM (vPro®)	**Connector**	RJ-45
	System Interface	PCI (Intel proprietary) + SMBus
	Data rates supported	10 Mbit/s operation (10BASE-T; IEEE 802.3i; IEEE 802.3 clauses 13-14) 100 Mbit/s operation (100BASE-TX; IEEE 802.3u; IEEE 802.3 clauses 21-30) 1000 Mbit/s operation (1000BASE-T; IEEE 802.3ab; IEEE 8023 clauses 40) Auto-Negotiation (Automatic Speed Selection) Full Duplex Operation at all Speeds, Half Duplex operation at 10 and 100 Mbit/s
	IEEE Compliance	IEEE 802.1p QoS (Quality of Service) Support IEEE 802.1q VLAN support IEEE 802.3x Flow Control (IEEE 802.3 clauses 31-32; configurable) IEEE 802.3az EEE (Energy Efficient Ethernet)
	Performance	TCP/IP/UDP Checksum Offload (configurable) Protocol Offload (ARP & NS) Large send offload and Giant send offload Receiving Side Scaling(Hash Mode Only) Jumbo Frame 9K
	Power consumption	Cable Disconnetion: 25mW 100Mbps Full Run: 450mW 1000bp Full Run: 1000mW WoL Enable(S3/S4/S5): 50mW

Technical Specifications

		WoL Disable(S3/S4/S5): 25mW
	Power Management	ACPI compliant – multiple power modes Situation-sensitive features reduce power consumption Advanced link down power saving for reducing link down power consumption
	Management Interface	Auto MDI/MDIX Crossover cable detection
	IT Manageability	Wake-on-LAN from modern standby or sleep state (Magic Packet and Microsoft Wake-Up Frame); Wake-on-LAN from off (Magic Packet only) PXE 2.1 Remote Boot Statistics Gathering (SNMP MIB II, Ethernet-like MIB, Ethernet MIB (802.3x, clause 30)) Comprehensive diagnostic and configuration software suite Virtual Cable Doctor for Ethernet cable status
	Security & Manageability	Intel® vPro™ support with appropriate Intel® chipset components
Intel® I219v 1 Gigabit Network Connection LOM (non-vPro®)	**Connector**	RJ-45
	System Interface	PCI (Intel proprietary) + SMBus
	Data rates supported	10 Mbit/s operation (10BASE-T; IEEE 802.3i; IEEE 802.3 clauses 13-14) 100 Mbit/s operation (100BASE-TX; IEEE 802.3u; IEEE 802.3 clauses 21-30) 1000 Mbit/s operation (1000BASE-T; IEEE 802.3ab; IEEE 802.3 clauses 40) Auto-Negotiation (Automatic Speed Selection) Full Duplex Operation at all Speeds, Half Duplex operation at 10, 100 & 1000 Mbit/s
	IEEE Compliance	IEEE 802.1p QoS (Quality of Service) Support IEEE 802.1q VLAN support IEEE 802.3x Flow Control (IEEE 802.3 clauses 31-32; configurable) IEEE 802.3az EEE (Energy Efficient Ethernet) IEEE 802.3i 10BASE-T IEEE 802.3u 100BASE-TX IEEE 802.3ab 1000BAE-T IEEE 802.3bz 2.5GBASE-T

Technical Specifications

	Performance	TCP/IP/UDP Checksum Offload (configurable) Protocol Offload (ARP & NS) Large send offload and Giant send offload Receiving Side Scaling (Hash Mode only) Jumbo Frame 9K
	Power consumption	Cable Disconnetion: 25mW 100Mbps Full Run: 450mW 1000bps Full Run: 1000mW WoL Enable(S3/S4/S5): 50mW WoL Disable(S3/S4/S5): 25mW
	Power Management	ACPI compliant – multiple power modes Situation-sensitive features reduce power consumption Advanced link down power saving for reducing link down power consumption
	Management Interface	Auto MDI/MDIX Crossover cable detection
	IT Manageability	Wake-on-LAN from modern standby or sleep state (Magic Packet and Microsoft Wake-Up Frame); Wake-on-LAN from off (Magic Packet only) PXE 2.1 Remote Boot Statistics Gathering (SNMP MIB II, Ethernet-like MIB, Ethernet MIB (802.3x, clause 30)) Comprehensive diagnostic and configuration software suite Virtual Cable Doctor for Ethernet cable status
	Security & Manageability	Intel® non-vPro™ support with appropriate Intel® chipset components

Qualcomm 9205 LTE-M (no Internet)	**Technology/Operating bands**	FDD LTE: 1700/2100 (Band 4), 1700/2100 (Band 66), 1800 (Band 3), 1900 (Band 2), 1900 (Band 25), 2100 (Band 1), 700 (Band 12 lower), 700 (Band 13 upper), 700 (Band 14 upper), 700 (Band 28), 700 (band 85), 800 (Band 20), 800 (Band 27), 850 (Band 18 lower), 850 (Band 19 upper), 850 (Band 26), 850 (Band 5), 900 (Band 8) MHz GSM/GPRS/EGPRS: 1800, 1900, 850, 900 MHz
	Wireless protocol standards	3GPP TS 21.111 V10.0.0: USIM and IC card requirements 3GPP TS 27.005 V10.0.1: Use of Data Terminal Equipment - Data Circuit terminating Equipment (DTE - DCE) interface for Short Message Service (SMS) and Cell Broadcast Service (CBS)

Technical Specifications

	3GPP TS 27.007 V10.0.8: AT command set for User Equipment (UE) 3GPP TS 31.102 V10.11.0: Characteristics of the Universal Subscriber Identity Module (USIM) application 3GPP TS 31.11 V10.16.0: Universal Subscriber Identity Module (USIM) Application Toolkit (USAT) 3GPP TS 36.124 V10.3.0: Electro Magnetic Compatibility (EMC) requirements for mobile terminals and ancillary equipment 3GPP TS 36.521-1 V14.3.0: User Equipment (UE) conformance specification; Radio transmission and reception; Part 1: Conformance testing 3GPP TS 51.010-1 V10.5.0: Mobile Station (MS) conformance specification; Part 1: Conformance specification 3GPP TS 51.011 V4.15.0: Specification of the Subscriber Identity Module -Mobile Equipment (SIM-ME) interface
GPS	Standalone GPS/Beidou/GLONASS
GPS bands	1575.42 MHz ± 1.023 MHz, GLONASS 1596-1607MHz, Beidou 1561.098 MHz
Maximum data rates	LTE FDD: 375.00 Kbps (Download), 1119.00 Kbps (Upload) GPRS: 107.00 Kbps (Download), 85.60 Kbps (Upload) EGPRS: 296.00 Kbps (Download), 236.80 Kbps (Upload)
Maximum output power	LTE (all bands except B41): 21.5 dBm GSM: 34.0 dBm
Maximum power consumption	LTE: 147 mA(peak), 60 mA(average)
Form Factor	M.2, 2242-S3 Key B
Weight	4.0 g (0.141 oz)
Dimensions (Length x Width x Thickness)	22.00 x 42.00 x 2.30 mm (0.87 x 1.65 x 0.09 inch)
embedded eSIM	Support

Technical Specifications

POWER

1. Actual battery Watt-hours (Wh) will vary from design capacity. Battery capacity will naturally decrease with shelf life, time, usage, environment, temperature, system configuration, loaded apps, features, power management settings and other factors

AC Adapter 65 Watt nPFC Standard USB type C Straight 1.8m	**Weight**	240g ± 10g	
	Input	100-240Vac	
		Input Efficiency	81.50% min at 115 Vac/ 230 Vac @5.00V 86.70% min at 115 Vac/ 230 Vac @9.00V 88.00% min at 115 Vac/ 230 Vac @12.00V 89.00% min at 115 Vac/ 230 Vac @15.00V 89.00% min at 115 Vac/ 230 Vac @20.00V
		Input frequency range	47-63Hz
		Input AC current	Max. 1.6 A at 90 Vac
	Output	**Output power**	5V/15W 9V/27W 12V/60W 15V/65W 20V/65W
		DC output	5V/9V/12V/15V/20V
		Hold-up time	100% load 5ms at 115 Vac input
		Output current limit	< 8.0A
		AC Inlet Type	C6
		DC Cable Connector	USB type C
		DC Cable Material	PVC
	Connector	C6	
	Environmental Design	**Operating temperature**	32˚ F to 95˚ F (0˚ to 35˚ C)
		Non-operating (storage) temperature	-4˚ F to 185˚ F (-20˚ to 85˚ C)
		Altitude	0 to 16,400 ft (0 to 5000m)
		Humidity	20% to 95%
		Storage Humidity	10% to 95%
	EMI and Safety Certifications	CE Mark - full compliance with LVD and EMC directives Worldwide safety standards - IEC60950-1 and IEC62368-1 : 2018, EN62368-1:2014+A11, UL 62368-1 Agency approvals - C-UL-US, TUV/GS, TUV/PSE, EN55032 Class B, FCC Class B, CISPR32 Class B, CCC and CECP, CU(EAC), EAEU, KCC(Safety+EMC) and K-MEPS, NOM-001 and 029 NYCE, NRcan,	

Technical Specifications

NRCS, ISC, SEC, PSB, Argentina S-mark, Australia RCM, BIS, BSMI, UAE, UKCA DoC

Technical Specifications

HP 65W Standard USB-C Straight AC Power Adapter	**Weight**	240g ± 10g	
	Input	100-240Vac	
		Input Efficiency	81.50% min at 115 Vac/ 230 Vac @5.00V 86.70% min at 115 Vac/ 230 Vac @9.00V 88.00% min at 115 Vac/ 230 Vac @12.00V 89.00% min at 115 Vac/ 230 Vac @15.00V 89.00% min at 115 Vac/ 230 Vac @20.00V
		Input frequency range	47-63Hz
		Input AC current	Max. 1.6 A at 90 Vac
	Output	**Output power**	5V/15W 9V/27W 12V/60W 15V/65W 20V/65W
		DC output	5V/9V/12V/15V/20V
		Hold-up time	100% load 5ms at 115 Vac input
		Output current limit	< 8.0A
		AC Inlet Type	C6
		DC Cable Connector	USB type C
		DC Cable Material	Halogen Free
	Connector	C6	
	Environmental Design	**Operating temperature**	32˚ F to 95˚ F (0˚ to 35˚ C)
		Non-operating (storage) temperature	-4˚ F to 185˚ F (-20˚ to 85˚ C)
		Altitude	0 to 16,400 ft (0 to 5000m)
		Humidity	20% to 95%
		Storage Humidity	10% to 95%
	EMI and Safety Certifications	CE Mark - full compliance with LVD and EMC directives Worldwide safety standards - IEC60950-1 and IEC62368-1 : 2018, EN62368-1:2014+A11, UL 62368-1 Agency approvals - C-UL-US, TUV/GS, TUV/PSE, EN55032 Class B, FCC Class B, CISPR32 Class B, CCC and CECP, CU(EAC), EAEU, KCC(Safety+EMC) and K-MEPS, NOM-001 and 029 NYCE, NRcan, NRCS, ISC, SEC, PSB, Argentina S-mark, Australia RCM, BIS, BSMI, UAE, UKCA DoC	

	Weight	380g ± 10g

Technical Specifications

HP 100W Slim USB-C Straight AC Power Adapter	Input	100-240Vac	
		Input Efficiency	81.50% min at 115 Vac/ 230 Vac @5.00V 86.70% min at 115 Vac/ 230 Vac @9.00V 88.00% min at 115 Vac/ 230 Vac @12.00V 89.00% min at 115 Vac/ 230 Vac @15.00V 89.00% min at 115 Vac/ 230 Vac @20.00V
		Input frequency range	47-63Hz
		Input AC current	Max. 1.6 A at 90 Vac
	Output	Output power	5V/15W 9V/27W 12V/60W 15V/75W 20V/100W
		DC output	5V/9V/12V/15V/20V
		Hold-up time	100% load 5ms at 115 Vac input/80% load 10ms at 115 Vac input
		Output current limit	5V/9V/12V/15V<125% max current, 20V<135% max current
		AC Inlet Type	C6
		DC Cable Connector	USB type C
		DC Cable Material	PVC
	Connector	C6	
	Environmental Design	Operating temperature	32˚ F to 95˚ F (0˚ to 35˚ C)
		Non-operating (storage) temperature	-4˚ F to 185˚ F (-20˚ to 85˚ C)
		Altitude	0 to 16,400 ft (0 to 5000m)
		Humidity	20% to 95%
		Storage Humidity	10% to 95%
	EMI and Safety Certifications	CE Mark - full compliance with LVD and EMC directives Worldwide safety standards - IEC60950-1, IEC 62368-1:2014 and IEC62368-1 : 2018, EN62368-1:2020+A11, UL 62368-1 Agency approvals - C-UL-US, TUV/GS, TUV/PSE, EN55032 Class B, FCC Class B, CISPR32 Class B, CCC, CU(EAC), KCC(Safety+EMC), NOM-001 NYCE, NRcan, NRCS, ISC, SEC, PSB, Argentina S-mark, Australia RCM, BIS, BSMI, UAE, UKCA DoC, Ukraine(CoC+DoC+RoHS+ECO)	

Technical Specifications

RX 48Whr Long Life Polymer Fast Charge 3 cell Battery*	**Weight**	0.192kg +/- 10g (0.423 lb)	
	Cells/Type	3cell Lithium-Ion Polymer cell / NCM 565875	
	Energy	**Voltage**	11.4V
		Amp-hour capacity	4.285Ah
		Watt-hour capacity[1]	48.84Wh
	Temperature	**Operating (Charging)**	32˚ to 113˚ F (0˚ to 45˚ C) 32˚ to 122˚ F (0˚ to 50˚ C)
		Operating (Discharging)	14˚ to 140˚ F (10˚ to 60˚ C)
		Optional Travel Battery Available	No

NOTE*: Only available for selected regions and selected configurations.

RX 56Whr Long Life Polymer Fast Charge 3 cell Battery	**Weight**	0.208kg +/- 10g (0.459 lb)	
	Cells/Type	3cell Lithium-Ion Polymer cell / 586075	
	Energy	**Voltage**	11.58V
		Amp-hour capacity	4.840Ah
		Watt-hour capacity[1]	56.04Wh
	Temperature	**Operating (Charging)**	32˚ to 113˚ F (0˚ to 45˚ C) 32˚ to 122˚ F (0˚ to 50˚ C)
		Operating (Discharging)	14˚ to 140˚ F (-10˚ to 60˚ C)
		Optional Travel Battery Available	No

Technical Specifications

AUDIO

HD Stereo Codec	ALC3247
Audio I/O Ports	3.5mm Headset: CTIA only; Headphone-out
Internal Speaker Amplifier	Integrate in ALC3247
Multi-streaming Capable	Playback multi-streaming can be enabled in the audio control panel to allow independent audio streams to be sent to/from the front jacks or integrated speaker., Following MSFT Behavior
Sampling	DAC: Supports resolutions from 16-bit to 16-bit;48.0 kHZ to 48.0 kHz ADC: Supports resolutions from 16-bit to 16-bit;48.0 kHZ to 48.0 kHz
Wavetable Syntheses	Yes - Uses OS soft wavetable
Internal Speaker	Yes

FINGERPRINT READER

Sensor vendor	ELAN
Sensor type	Capacitive
DPI resolution	508 DPI
Scan area	80 x 80 pixels
False Rejection Rate	< 3%
False Acceptance Rate	< 0.001%
Mobile Voltage Operation	2.7 V ~ 3.6 V
Operating Temperature	-20°C ~ 80°C (-4°F ~ 176°F)
Current Consumption Image	35 mA max
Low Latency Wait For Finger	300 uA
Capture Rate	50 frames/sec
ESD Resistance	IEC 61000-4-2 4B (+15KV)
Detection Matrix	508 dpi / 4.0 x 4.0 mm sensor area

Sensor vendor	SYNAPTICS
Sensor type	Capacitive
DPI resolution	363 DPI
Scan area	104 x 86 pixels

Technical Specifications

False Rejection Rate	< 3%
False Acceptance Rate	< 0.001%
Mobile Voltage	
Operation	2.7 V ~ 3.6 V
Operating Temperature	0°C ~ 60°C (32°F ~ 140°F)
Current Consumption	
Image	100 mA max
Low Latency Wait For	
Finger	260 uA
Capture Rate	50 frames/sec
ESD Resistance	IEC 61000-4-2 4B (+15KV)
Detection Matrix	363 dpi / 7.4 x 6.0 mm sensor area

Technical Specifications

ENVIRONMENTAL DATA

Environmental Data	**Eco-Label Certifications & declarations**	This product has received or is in the process of being certified to the following approvals and may be labeled with one or more of these marks: • IT ECO declaration • US ENERGY STAR® • US Federal Energy Management Program (FEMP) • EPEAT® Gold registered in the United States. See http://www.epeat.net for registration status in your country. • TCO Certified • China Energy Conservation Program (CECP) • China State Environmental Protection Administration (SEPA) • Taiwan Green Mark • Korea Eco-label • Japan PC Green label*		
	Sustainable Impact Specifications	• Product Carbon Footprint • Ocean-bound plastic in Fan and Speaker • 20% post-consumer recycled plastic • 50% recycled metal • Low halogen • Outside Box and corrugated cushions are 100% sustainably sourced and recyclable • Molded Paper Pulp Cushion inside box is 100% sustainably sourced and recyclable. • Bulk packaging available		
	System Configuration	The configuration used for the Energy Consumption and Declared Noise Emissions data for the Notebook model is based on a "Typically Configured Notebook".		
	Energy Consumption (in accordance with US ENERGY STAR® test method)	**115VAC, 60Hz**	**230VAC, 50Hz**	**100VAC, 50Hz**
	Normal Operation (Sort idle)	4.19 W	4.29 W	3.97 W
	Normal Operation (Long idle)	0.82 W	0.83 W	0.79 W
	Sleep	0.82 W	0.83 W	0.79 W
	Off	0.34 W	0.38 W	0.33 W
		NOTE: Energy efficiency data listed is for an ENERGY STAR® compliant product if offered within the model family. HP computers marked with the ENERGY STAR® Logo are compliant with the applicable U.S. Environmental Protection Agency (EPA) ENERGY STAR® specifications for computers. If a model family does not		

Technical Specifications

		offer ENERGY STAR® compliant configurations, then energy efficiency data listed is for a typically configured PC featuring a hard disk drive, a high efficiency power supply, and a Microsoft Windows® operating system.		
	Heat Dissipation*	**115VAC, 60Hz**	**230VAC, 50Hz**	**100VAC, 50Hz**
	Normal Operation (Short idle)	14.29 BTU/hr	14.63 BTU/hr	13.54 BTU/hr
	Normal Operation (Long idle)	2.80 BTU/hr	2.83 BTU/hr	2.69 BTU/hr
	Sleep	2.80 BTU/hr	2.83 BTU/hr	2.69 BTU/hr
	Off	1.16 BTU/hr	1.30 BTU/hr	1.13 BTU/hr
		***NOTE:** Heat dissipation is calculated based on the measured watts, assuming the service level is attained for one hour.		
	Declared Noise Emissions (in accordance with ISO 7779 and ISO 9296)	**Sound Power (L_{WAd}, bels)**	**Sound Pressure (L_{pAm}, decibels)**	
	Typically Configured – Idle	2.7	13.9	
	Fixed Disk – Random writes	3.2	21.4	
	Optical Drive – Sequential reads	4.0	30.3	
	Longevity and Upgrading	This product can be upgraded, possibly extending its useful life by several years. Upgradeable features and/or components contained in the Spare parts are available throughout the warranty period and or for up to "5" years after the end of production.		
	Additional Information	• This product is in compliance with the Restrictions of Hazardous Substances (RoHS) directive - 2011/65/EC. • This HP product is designed to comply with the Waste Electrical and Electronic Equipment (WEEE) Directive – 2002/96/EC. • This product is in compliance with California Proposition 65 (State of California; Safe Drinking Water and Toxic Enforcement Act of 1986). • This product is in compliance with the IEEE 1680 (EPEAT) standard at the Gold level, see www.epeat.net • Plastics parts weighing over 25 grams used in the product are marked per ISO11469 and ISO1043.		

Technical Specifications

		• This product is 95.0% recycle-able when properly disposed of at end of life.		
	Packaging Materials	**External:**	PAPER/Corrugated	245 g
			PAPER/Paperboard	50 g
			PAPER/Molded Pulp	150 g
		Internal:	PLASTIC/Polyethylene low density - LDPE	10 g
		The plastic packaging material contains at least 0.0% recycled content.		
		The corrugated paper packaging materials contains at least 55.6% recycled content.		
	RoHS Compliance	HP Inc. complies fully with materials regulations. We were among the first companies to extend the restrictions in the European Union (EU) Restriction of Hazardous Substances (RoHS) Directive to our products worldwide through the HP GSE. HP has contributed to the development of related legislation in Europe, as well as China, India, and Vietnam. We believe the RoHS directive and similar laws play an important role in promoting industry-wide elimination of substances of concern. We have supported the inclusion of additional substances—including PVC, BFRs, and certain phthalates—in future RoHS legislation that pertains to electrical and electronics products. We met our voluntary objective to achieve worldwide compliance with the new EU RoHS requirements for virtually all relevant products by July 2013, and we will continue to extend the scope of the commitment to include further restricted substances as regulations continue to evolve. To obtain a copy of the HP RoHS Compliance Statement, see HP RoHS position statement.		
	Material Usage	This product does not contain any of the following substances in excess of regulatory limits (refer to the HP General Specification for the Environment at http://www.hp.com/hpinfo/globalcitizenship/environment/supplychain/gen_specifications.html): • Asbestos		

Technical Specifications

		• Certain Azo Colorants • Certain Brominated Flame Retardants – may not be used as flame retardants in plastics • Cadmium • Chlorinated Hydrocarbons • Chlorinated Paraffins • Bis(2-Ethylhexyl) phthalate (DEHP) • Benzyl butyl phthalate (BBP) • Dibutyl phthalate (DBP) • Diisobutyl phthalate (DIBP) • Formaldehyde • Halogenated Diphenyl Methanes • Lead carbonates and sulfates • Lead and Lead compounds • Mercuric Oxide Batteries • Nickel – finishes must not be used on the external surface designed to be frequently handled or carried by the user. • Ozone Depleting Substances • Polybrominated Biphenyls (PBBs) • Polybrominated Biphenyl Ethers (PBBEs) • Polybrominated Biphenyl Oxides (PBBOs) • Polychlorinated Biphenyl (PCB) • Polychlorinated Terphenyls (PCT) • Polyvinyl Chloride (PVC) – except for wires and cables, and certain retail packaging has been voluntarily removed from most applications. • Radioactive Substances • Tributyl Tin (TBT), Triphenyl Tin (TPT), Tributyl Tin Oxide (TBTO)
	Packaging Usage	HP follows these guidelines to decrease the environmental impact of product packaging: • Eliminate the use of heavy metals such as lead, chromium, mercury and cadmium in packaging materials. • Eliminate the use of ozone-depleting substances (ODS) in packaging materials. • Design packaging materials for ease of disassembly. • Maximize the use of post-consumer recycled content materials in packaging materials. • Use readily recyclable packaging materials such as paper and corrugated materials. • Reduce size and weight of packages to improve transportation fuel efficiency.

Technical Specifications

		• Plastic packaging materials are marked according to ISO 11469 and DIN 6120 standards.
	End-of-life Management and Recycling	HP offers end-of-life HP product return and recycling programs in many geographic areas. To recycle your product, please go to: http://www.hp.com/go/reuse-recycle or contact your nearest HP sales office. Products returned to HP will be recycled, recovered or disposed of in a responsible manner. The EU WEEE directive (2002/95/EC) requires manufacturers to provide treatment information for each product type for use by treatment facilities. This information (product disassembly instructions) is posted on the Hewlett Packard web site at: http://www.hp.com/go/recyclers. These instructions may be used by recyclers and other WEEE treatment facilities as well as HP OEM customers who integrate and re-sell HP equipment.
	HP, Inc. Corporate Environmental Information	For more information about HP's commitment to the environment: Global Citizenship Report http://www.hp.com/hpinfo/globalcitizenship/gcreport/index.html Eco-label certifications http://www8.hp.com/us/en/hp-information/environment/ecolabels.html ISO 14001 certificates: http://h20195.www2.hp.com/V2/GetDocument.aspx?docname=c04755842 and http://www.hp.com/hpinfo/globalcitizenship/environment/pdf/cert.pdf

Technical Specifications

	footnotes	• Percentage of ocean-bound plastic contained in each component varies by product • Recycled plastic content percentage is based on the definition set in the IEEE 1680.1-2018 standard. • External power supplies, WWAN modules, power cords, cables and peripherals excluded. • 100% outer box packaging and corrugated cushions made from sustainably sourced certified and recycled fibers. • Fiber cushions made from 100% recycled wood fiber and organic materials. • Disclaimer: recycled metal is expressed as a percentage of the total weight of the metal according to ISO 14021 definitions for metal parts over 25 grams.

Options and Accessories (Sold separately and availability may vary by country)

DOCKING (Sold Separately)

Docking station model #1	HP Thunderbolt 4 100W G6 Dock
Total number of supported displays (incl. the notebook display)	4
Max. resolutions supported	(4) 4K @60Hz* (2) 4K @ 120Hz* (3) QHD @ 120Hz* (1) QHD @ 360Hz*
Dock Connectors	1x HDMI 2.1, 2x DisplayPort 1.4, 1x Thunderbolt 4
HP Quick Connect Support	Yes
Technical limitations	**HP Quick Connect is supported on this platform.** *Requires DisplayPort 1.4 support with Display Stream Compression (DSC). Bluetooth required for HP Quick Connect. HP Quick Connect available on select HP notebooks. Maximum resolution and display support is dependent on the maximum capability of the notebook. **Maximum of (4) displays with maximum resolution of 5K@ 30Hz running** Thunderbolt Hosts: Maximum resolution possible is dual 8K displays @ 60Hz running Thunderbolt host or running a non-Thunderbolt host in high resolution mode @30Hz Non-Thunderbolt hosts: **The highest resolution for dual displays running a non-Thunderbolt host in multi-function mode is** (1) 5K dual cable (using both DP ports) +(1) 4K on USB-C DP port Non-Thunderbolt hosts support (3) displays with a maximum resolution of (2) 5K single cable + (1) 4K UHD @ 60 Hz in high resolution mode. In multi-function mode the maximum resolution for (3) displays is (2) 5K single cable @ 30Hz + (1) 4K UHD @ 30Hz.
Docking station model #2	HP USB-C Dock G5
Total number of supported displays (incl. the notebook display)	3
Max. resolutions supported	Multi-Function Mode: (2) 5k @ 30Hz and (1) 4k UHD @ 30Hz on any port High-Resolution Mode: (2) 5k @ 60Hz on DisplayPort ports and (1) 4k UHD @ 60Hz on HDMI port
Dock Connectors	1x HDMI 2.0, 2x DisplayPort 1.4

Options and Accessories (Sold separately and availability may vary by country)

Technical limitations	**Maximum resolution and display support is dependent on the maximum capability of the notebook.** **Highest resolution with dual displays is two 8K@ 60Hz host in High Resolution mode.** Three maximum displays supported are two 5K@ 30 Hz on DP ports plus one 4K UHD@ 30 Hz on HDMI in Multi-function mode. The highest resolution for a non-Thunderbolt host in Multi-function mode is a single 5K dual cable (using both DP ports) + (1) 4K on HDMI port.
Docking station model #3	HP Thunderbolt™ 120W G4 Dock
Total number of supported displays (incl. the notebook display)	4
Max. resolutions supported	Quad 4K @60Hz Dual 8K single cable@30 for Thunderbolt hosts or USB-C hosts DisplayPort 1.4 with Display Stream Compression in High-Resolution Mode
Dock Connectors	2 x HDMI 2.0, 1 x USB-C Alt Mode, 1 x Thunderbolt 4, 2 x DisplayPort 1.4
Technical limitations	**Maximum resolution and display support is dependent on the maximum capability of the notebook.** Thunderbolt Hosts: Maximum of (4) displays with maximum resolution of 5K@ 30Hz running Thunderbolt host. Maximum resolution possible is dual 8K displays @ 60Hz running Thunderbolt host or running a non-Thunderbolt host in high resolution mode @30Hz. Non-Thunderbolt hosts: **The highest resolution for dual displays running a non-Thunderbolt host in multi-function mode is** (1) 5K dual cable (using both DP ports) +(1) 4K on USB-C DP port. Non-Thunderbolt hosts support (3) displays with a maximum resolution of (2) 5K single cable + (1) 4K UHD @ 60 Hz in high resolution mode. In multi-function mode the maximum resolution for (3) displays is (2) 5K single cable @ 30Hz + (1) 4K UHD @ 30Hz.

Options and Accessories (Sold separately and availability may vary by country)

Docking station model #4	HP USB-C G5 Essential Dock
Total number of supported displays (incl. the notebook display)	3
Max. resolutions supported	Multi-Function Mode: (2) 5k @ 30Hz and (1) 4k UHD @ 30Hz on any port High-Resolution Mode: (2) 5k @ 60Hz on DisplayPort ports and (1) 4k UHD @ 60Hz on HDMI port
Dock Connectors	1x HDMI 2.0, 2x DisplayPort 1.4
Technical limitations	**Maximum resolution and display support is dependent on the maximum capability of the notebook.** **Highest resolution with dual displays is two 8K@ 60Hz host in High Resolution mode.** Three maximum displays supported are two 5K@ 30 Hz on DP ports plus one 4K UHD@ 30 Hz on HDMI in Multi-function mode The highest resolution for a non-Thunderbolt host in Multi-function mode is a single 5K dual cable (using both DP ports) + (1) 4K on HDMI port.
Docking station model #5	HP USB-C/A Universal Dock G2
Total number of supported displays (incl. the notebook display)	3
Max. resolutions supported	Multi-Function Mode: (3) 4K DCI @ 30Hz on any port High-Resolution Mode: (3) 4K DCI @ 30Hz on any port
Dock Connectors	1x HDMI 2.0, 2x DisplayPort 1.2
Technical limitations	**Maximum resolution and display support is dependent on the maximum capability of the notebook.** **The best resolution for dual or triple displays is 4K UHD@ 60Hz.** For use with the USB-A adapter that comes in the box the maximum number of displays supported is (2) 4k x 60 Hz on the Type-A Gen 1 connection from the host.

Options and Accessories (Sold separately and availability may vary by country)

Type	Description	Part Number
Adapter	HP HDMI to VGA Adapter	H4F02AA
	HP USB 3.0 to Gigabit RJ45 Adapter G2	4Z7Z7AA
	HP USB-C to DisplayPort Adapter	6M148AA
	HP USB-C to DisplayPort Adapter G2	8Y8Y1AA, 8Y8Y2AA
	HP USB-C to HDMI 2.0 Adapter	1WC36AA
	HP USB-C to RJ45 Adapter G2	4Z527AA
	HP USB-C to USB 3.0 Adapter	N2Z63AA
	HP USB-C to VGA Adapter	N9K76AA
Cases	HP Campus XL Marble Stone Backpack	7K0E2AA
	HP Campus XL Tie Dye Backpack	7K0E3AA
	HP Renew Business 17.3 Laptop Backpack	3E2U5AA
	HP Renew Business 17.3 Laptop Bag	3E2U6AA
	HP Renew Executive 16 Laptop Backpack	6B8Y1AA
	HP Renew Executive 16 Laptop Bag	6B8Y2AA
Commodity	HP USB DVD-Writer External ODD	F2B56AA
	HP Nano Keyed Cable Lock	1AJ39AA
	HP Nano Master Keyed Cable Lock	1AJ40AA
	HP SureKey Standard/Nano/Wedge Cable Lock	6UW42AA
Docking	HP Thunderbolt 4 100W G6 Dock	9X472UT
	HP Thunderbolt 4 Ultra 180W G6 Dock	9X481UT
	HP Thunderbolt 4 Ultra 280W G6 Dock	AW5M5UT
	HP Thunderbolt™ 120W G4 Dock	4J0A2AA
	HP USB-C™ 120W G5 Dock	5TW10AA
	HP USB-C™ G5 Essential Dock	72C71AA
	HP USB-C™/A 120W G2 Universal Dock	5TW13AA

Options and Accessories (Sold separately and availability may vary by country)

Hub	HP 4K USB-C Multiport Hub	6G843AA
	HP Universal USB-C Hub and Laptop Charger Combo	9H0H9AA
	HP Universal USB-C Multiport Hub	50H55AA
	HP USB-C to USB-A Hub	Z6A00AA
	HP USB-C Travel Hub G3	86S97AA
Keyboard/Combo	HP 655 Wireless Keyboard and Mouse Combo	4R009AA
	HP 655 Wireless Keyboard and Mouse Combo (Blk Qty.10)	4R009A6
	HP 655 Wireless Keyboard and Mouse Combo White	860P8AA
	HP Wireless Rechargeable 950MK Mouse and Keyboard	3M165AA
	HP 405 Multi-Device Backlit Wired Keyboard	7N7C1AA
	HP 455 Programmable Wireless Keyboard	4R177AA
	HP 455 Programmable Wireless Keyboard (Bulk Qty.12)	4R177A6
	HP 475 Dual-Mode Wireless Keyboard	7N7B9AA
	HP 965 black Ergonomic Wireless Keyboard	7E756AA
	HP 975 Dual-Mode USB+Bluetooth® Wireless Keyboard	3Z726AA
Mouse	HP 125 Wired Mouse	265A9AA
	HP 125 Wired Mouse (Bulk Qty.120)	265A9A6
	HP 128 Laser Wired Mouse	265D9AA
	HP 128 Laser Wired Mouse (Bulk Qty.120)	265D9A6
	HP 320M Wired Mouse	9VA80AA
	HP 425 Programmable Wireless Mouse	7M1D5AA
	HP 435 Multi-Device Wireless Mouse	3B4Q5AA
	HP 715 Rechargeable Multi-Device Bluetooth® Mouse	6E6F0AA
	HP 925 Ergonomic Vertical Wireless Mouse	6H1A5AA
	HP Creator Black 935 Wireless Mouse	1D0K8AA
	HP Multi-Device Black 635 Wireless Mouse	1D0K2AA
	HP Premium Wireless Mouse	1JR31AA
Power	HP 110W USB-C Laptop Charger	8B3Y2AA
	HP 65W GaN USB-C Laptop Charger	600Q8AA

Options and Accessories (Sold separately and availability may vary by country)

	HP 65W USB-C Laptop Charger	671R3AA
	HP 65W USB-C LC AC Power Adapter	1P3K6AA
Video	HP USB-A 325 Webcam	53X27AA
	HP Streaming 965 Webcam	695J5AA
	HP 625 Webcam	6Y7L1AA
	HP 435 Webcam	77B10AA

Change Log

Date of change:	Version History:		Description of change:
June 10, 2024	V1 to V2	Added	System unit Section
June 11, 2024	V2 to V3	Added	Display Section
June 17, 2024	V3 to V4	Added	Graphics Section
July 9, 2024	V4 to V5	Added	Display Section
July 15, 2024	V5 to V6	Updated	Weight and Dimensions Section
August 9, 2024	V6 to V7	Updated	Graphics Section
October9, 2024	V7 to V8	Updated	Update Port Specification to: Thunderbolt™ 4
December 5, 2024	V14 to V15	Updated	UEFI version
January 22, 2025	V15 to V16	Updated	Display Section
February 18, 2025	V16 to V17	Updated	Power Section
March 6, 2025	V17 to V18	Updated	Software and Security Section
May 21, 2025	V18 to 19	Updated	Docking Section
September 19, 2025	V19 to V20	Updated	Software and Security Section
March 30, 2026	V20 to V21	Updated	Memory Section
April 27, 2026	V21 to V22	Updated	Memory Section

© Copyright 2026 HP Development Company, L.P. The information contained herein is subject to change without notice. The only warranties for HP products and services are set forth in the express warranty statements accompanying such products and services. Nothing herein should be construed as constituting an additional warranty. HP shall not be liable for technical or editorial errors or omissions contained herein.

Intel, Core and Intel vPro are trademarks or registered trademarks of Intel Corporation or its subsidiaries in the United States and other countries. DisplayPort™ and the DisplayPort™ logo are trademarks owned by the Video Electronics Standards Association (VESA®) in the United States and other countries. USB Type-C® and USB-C® are trademarks of USB Implementers Forum. ENERGY STAR is a registered trademark of the U.S. Environmental Protection Agency. Microsoft and Windows are either registered trademarks or trademarks of Microsoft Corporation in the United States and/or other countries.