5

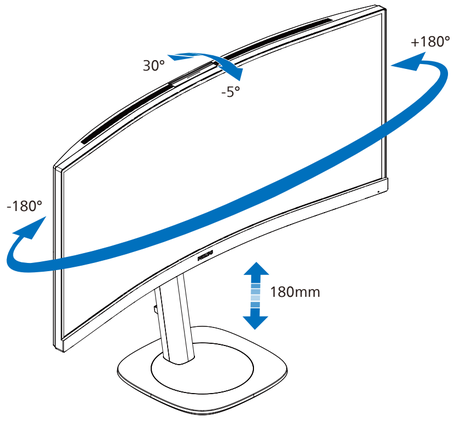

Register your product and get support at
www.philips.com/support

FAQ

Software

User Manual

2025 © TOP Victory Investments Ltd. All rights reserved.

This product has been manufactured by and is sold under the responsibility of Top Victory Investments Ltd., and Top Victory Investments Ltd. is the warrantor in relation to this product. Philips and the Philips Shield Emblem are registered trademarks of Koninklijke Philips N.V. and are used under license.

Specifications are subject to change without notice.

The terms HDMI, HDMI High-Definition Multimedia Interface, HDMI Trade Dress and the HDMI Logos are trademarks or registered trademarks of HDMI Licensing Administrator, Inc.

www.philips.com

Energy Labelling
34B2U3600CH

H41G78S781318B

PHILIPS

34B2U3600CH
34B2U3600HW

Quick Start

Register your product and get support at **www.philips.com/welcome**

Contents

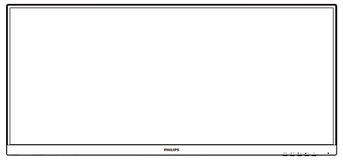

Power

HDMI

DP

USB C-C

USB C-A

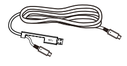

USB C-C/A

en The images shown are for illustrative purposes only. Actual product and accessory may vary by country or regions. Actual product and accessory shall prevail in kind.

fr Les images sont uniquement fournies à des fins d'illustration. Le produit et les accessoires actuels peuvent différer selon le pays ou la région. Le produit et les accessoires réels prévaudront dans tous les cas.

es Las imágenes que se muestran son solo de carácter ilustrativo. El producto y los accesorios reales pueden variar según el país o las regiones. El producto real y el accesorio prevalecerán en especie.

sc 所有插图和产品配件仅为示意参考。因销售区域差异，产品可能不含有以上配件，具体以实物为准。

jp 表示されている画像は説明のみを目的としています。実際の付属品は国や地域によって異なる場合がございます。

ko 표시된 이미지는 이해를 돕기 위한 것으로 실제 제품 및 액세서리는 국가 또는 지역에 따라 다를 수 있습니다. 실제 제품 및 동봉된 액세서리를 확인하세요.

1

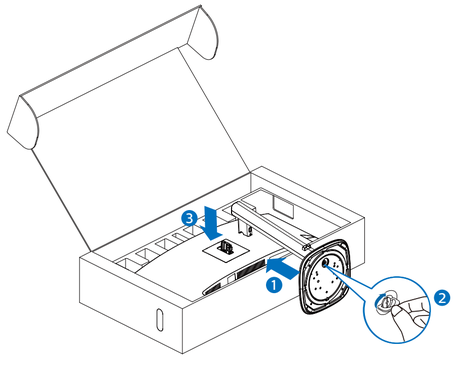

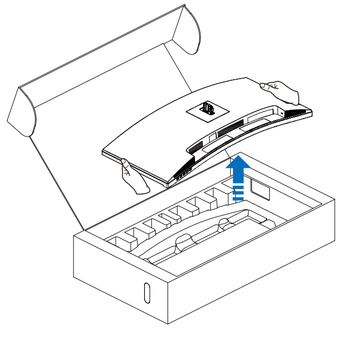

2

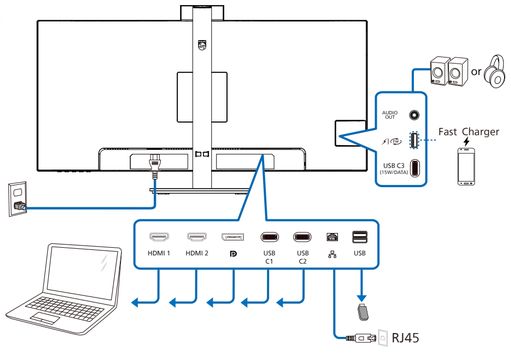

USB hub (USB A-C)

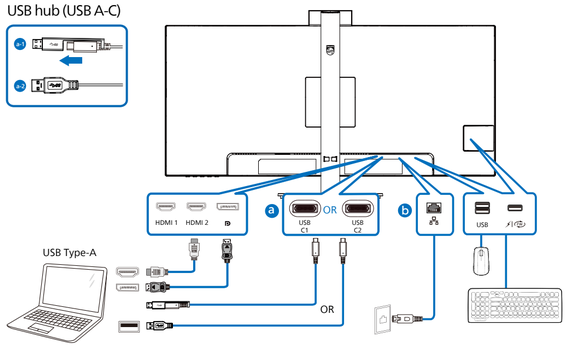

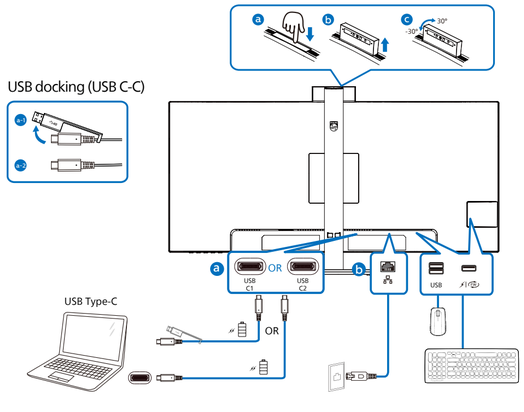

KVM

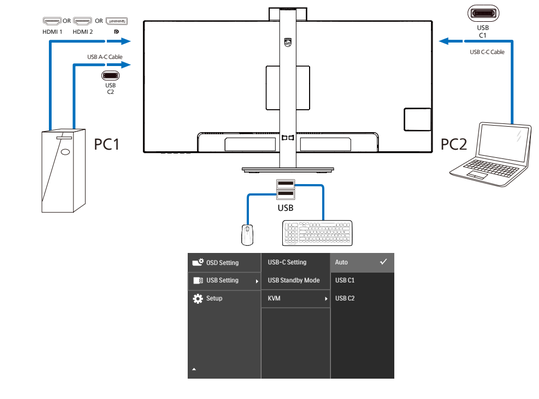

3

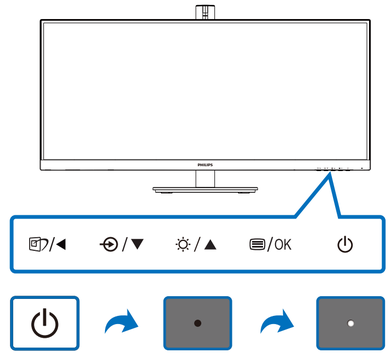

4

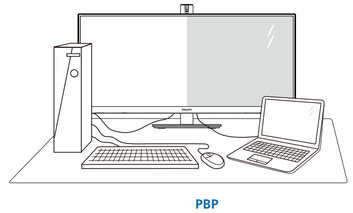

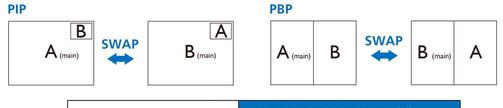

MultiView		SUB SOURCE POSSIBILITY (xl)			
	Inputs	HDMI 1	HDMI 2	DisplayPort	USB C
MAIN SOURCE (xl)	HDMI 1	●	●	●	●
	HDMI 2	●	●	●	●
	DisplayPort	●	●	●	●
	USB C	●	●	●	●