View this document in HTML
crestron.com/docs/9132

Product Manual

Crestron Flex Unified Communications Solutions

Crestron Electronics, Inc.

Have feedback on this document? Contact docfeedback@crestron.com.

Original Instructions
The U.S. English version of this document is the original instructions.
All other languages are a translation of the original instructions.

Crestron product development software is licensed to Crestron dealers and Crestron Service Providers (CSPs) under a limited nonexclusive, nontransferable Software Development Tools License Agreement. Crestron product operating system software is licensed to Crestron dealers, CSPs, and end-users under a separate End-User License Agreement. Both of these Agreements can be found on the Crestron website at www.crestron.com/legal/software_license_agreement.

The product warranty can be found at www.crestron.com/warranty.

The specific patents that cover Crestron products are listed at www.crestron.com/legal/patents.

Certain Crestron products contain open source software. For specific information, visit www.crestron.com/opensource.

Crestron, the Crestron logo, Crestron Fusion, Crestron Toolbox, XiO Cloud, and Smart Graphics are either trademarks or registered trademarks of Crestron Electronics, Inc., in the United States and/or other countries. ASUS is either a trademark or registered trademark of ASUSTeK Computer Inc. in the United States and/or other countries. Avaya Aura is either a trademark or registered trademark of Avaya, Inc. in the United States and/or other countries. Bluetooth is either a trademark or registered trademark of Bluetooth SIG, Inc. in the United States and/or other countries. Cisco and Cisco Webex are either trademarks or registered trademarks of Cisco Technology, Inc. in the United States and/or other countries. GotoMeeting is either a trademark or registered trademark of Citrix Online, LLC in the United States and/or other countries. Dell is either a trademark or registered trademark of Dell Inc. in the United States and/or other countries. DECT is either a trademark or a registered trademark of the European Telecommunications Standards Institute in the United States and/or other countries. Android is either a trademark or registered trademark of Google Inc. in the United States and/or other countries. Jabra and PanaCast are trademarks of GN Audio A/S in the United States and/or other countries. HDMI and the HDMI logo are either trademarks or registered trademarks of HDMI Licensing LLC in the United States and/or other countries. Huddly IQ is either a trademark or registered trademark of Huddly AS in the United States and/or other countries. Lenovo and ThinkSmart are either trademarks or registered trademarks of Lenovo in the United States and/or other countries. Microsoft, Microsoft Exchange Server, Microsoft Intune, Microsoft Teams, Microsoft 365, Outlook, Skype, and Windows are either trademarks or registered trademarks of Microsoft Corporation in the United States and/or other countries. Mitel is either a trademark or registered trademark of Mitel Networks Corporation in the United States and/or other countries. ShoreTel is either a trademark or registered trademark of ShoreTel, Inc. in the United States and/or other countries. Shure and IntelliMix are either trademarks or registered trademarks of Shure Incorporated or Shure Acquisition Holdings, Inc. in the United States and/or other countries. Slack is either a trademark or registered trademark of Slack Technologies, Inc. in the United States and/ or other countries. USB Type-C is either a trademark or registered trademark of USB Implementers Forum, Inc. in the United States and/or other countries. DisplayPort is either a trademark or registered trademark of Video Electronics Standards Association in the United States and/or other countries. Zoom and Zoom Rooms are either trademarks or registered trademarks of Zoom Video Communications, Inc. in the United States and/or other countries. Other trademarks, registered trademarks, and trade names may be used in this document to refer to either the entities claiming the marks and names or their products. Crestron disclaims any proprietary interest in the marks and names of others. Crestron is not responsible for errors in typography or photography.



©2025 Crestron Electronics, Inc.

Contents

What's New? ix
December 23, 2024 (Doc ID: 9132L) ix
September 23, 2024 (Doc ID: 9132K) ix
September 06, 2024 (Doc ID: 9132J) ix
August 16, 2024 (Doc ID: 9132H) ix
August 9, 2024 (Doc ID: 9132G) ix
July 22, 2024 (Doc ID: 9132F) x
March 29, 2024 (Doc ID: 9132E) x
February 26, 2024 (Doc ID: 9132D) x
September 19, 2022 (Doc ID: 9132C) xi
April 29, 2022 (Doc ID: 9132B) xi
October 5, 2021 (Doc ID: 9132A) xi

Overview 1
Intended Audience 2
System Hardware 3
UC Engine Bracket Assembly 4
Control Device 7
Camera 10
Intelligent Videobar 12
UC-PR 14
HDMI® over CATx Receiver 15
Extension Microphone Pod 16

Getting Started 17

Pre-Deployment 17
Pre-Deployment Checklist 17
Licenses Required: 19

Hardware Installation and Connections 19

Configuration 21

Operation 21

Troubleshooting 21

Maintenance 22

Known Issues 23

Room Design 25
Small Room Application 26

Medium Room Application 28
Large Room Application 31
Custom Room Application 34

Microsoft Teams® Rooms Solution 35

Features 35
UC-B30-T and UC-B31-T Series Features 36
UC-BX30-T and UC-BX31-T Series Features 40
UC-B70-A-T and UC-B70-A-T-I Features 44
UC-MM30-T and UC-MMX30-T Series Features 47
UC-MM30-NC-T and UC-MMX30-NC-T Series Features 50
UC-C100-T and UC-CX100-T Series Features 53
UC-M50-T and UC-MX50-T Features 57
UC-M50-NC-T and UC-MX50-NC-T Features 60
UC-M70-T and UC-MX70-T Features 63
UC-M70-NC-T and UC-MX70-NC-T Features 66
UC-ENGINE-BRKT-T-UPGRD and UC-ENGINE-BRKTX-T-UPGRD Features 69
Specifications and Dimension Drawings 72
Tabletop Conferencing Device Specifications 73
Tabletop Conferencing Device Dimension Drawing 74
Mini Tabletop Conferencing Device Specifications 75
Mini Tabletop Conferencing Device Dimension Drawing 76
Tabletop and Wall Mount Touch Screen Specifications 77
Tabletop Touch Screen Dimension Drawing 78
Wall Mount Touch Screen Dimension Drawing 79
Crestron Videobar 70 Specifications 81
Crestron Videobar 70 Dimension Drawing 82
Smart Soundbar and Camera Specifications 83
UC-SB1-CAM-FLEX Dimension Drawing 84
Camera Specifications 86
UC Engine Bracket Assembly Specifications 87
UC Engine Bracket Assembly Dimension Drawing 88
UC Presentation Transmitter Specifications 91
UC Presentation Transmitter Dimension Drawing 92
Microphone Pod Specifications 93
Microphone Pod Dimension Drawing 93
Microsoft Teams Rooms Deployment and Setup 93
Minimum Requirements 93
Pre-Deployment Checklist 95
Initial Setup 96
Quick Start Guides 97
UC-B70-A-T and UC-B70-A-T-I Installation 102
Configure 108
Microsoft Teams Rooms with Dell UC Engine 110
Microsoft Teams Rooms with ASUS UC Engine 295
Configuration 296

Microsoft Teams Rooms Software Updates 297
Crestron Settings App 298
Switching from Microsoft Teams Rooms to Zoom Rooms 309
Operation 319

Zoom Rooms® Solution 320

Features 320
UC-B30-Z and UC-B31-Z Series Features 321
UC-BX30-Z and UC-BX31-Z Series Features 324
UC-B70-A-Z and UC-B70-A-Z-I Features 327
UC-MM30-Z and UC-MMX30-Z Series Features 330
UC-MM30-NC-Z and UC-MMX30-NC-Z Series Features 333
UC-C100-Z and UC-CX100-Z Series Features 336
UC-C100-PRO-Z and UC-CX100-PRO-Z Series Features 339
UC-M50-Z and UC-MX50-Z Features 342
UC-M50-NC-Z and UC-MX50-NC-Z Features 345
UC-M70-Z and UC-MX70-Z Features 347
UC-M70-NC-Z and UC-MX70-NC-Z Features 350
UC-ENGINE-BRKT-Z-UPGRD and UC-ENGINE-BRKTX-Z-UPGRD Features 352
Specifications and Dimension Drawings 354
Tabletop Conferencing Device Specifications 355
Tabletop Conferencing Device Dimension Drawing 356
Mini Tabletop Conferencing Device Specifications 357
Mini Tabletop Conferencing Device Dimension Drawing 358
Tabletop and Wall Mount Touch Screen Specifications 359
Tabletop Touch Screen Dimension Drawing 360
Wall Mount Touch Screen Dimension Drawing 361
Crestron Videobar 70 Specifications 363
Crestron Videobar 70 Dimension Drawing 364
Smart Soundbar and Camera Specifications 365
UC-SB1-CAM-FLEX Dimension Drawing 366
Camera Specifications 368
UC Engine Bracket Assembly Specifications 369
UC Engine Bracket Assembly Dimension Drawing 370
UC Presentation Transmitter Specifications 376
UC Presentation Transmitter Dimension Drawing 377
Microphone Pod Specifications 378
Microphone Pod Dimension Drawing 378
Zoom Rooms Deployment and Setup 379
Minimum Requirements 379
Pre-Deployment Checklist 379
Initial Setup 379
Quick Start Guides 381
UC-B70-A-Z and UC-B70-A-Z-I 385
Zoom Rooms with Dell UC Engine 393
Zoom Rooms with ASUS UC Engine 552

Configuration ... 553
Zoom Rooms Software Updates ... 554
Crestron Settings App ... 555
Switching from Zoom Rooms to Microsoft Teams Rooms ... 566
Custom Controls on a Zoom Rooms System ... 577
Crestron Control for Zoom Rooms Software ... 579
Operation ... 580

Open-Platform Solutions ... 581

Features ... 581
UC-M50-UA Features ... 582
UC-M50-U Features ... 584
UC-MX50-U Features ... 587
UC-M70-UA Features ... 590
UC-M70-U Features ... 592
UC-MX70-U Features ... 595
Specifications and Dimension Drawings ... 598
Tabletop Conferencing Device Specifications ... 599
Tabletop Conferencing Device Dimension Drawing ... 600
Camera Specifications ... 601
Microphone Pod Specifications ... 602
Microphone Pod Dimension Drawing ... 602
HDMI over CATx Receiver Specifications ... 603
HDMI over CATx Receiver Dimension Drawing ... 604
Quick Start Guides ... 605
UC-M50-UA ... 606
UC-M50-U ... 609
UC-MX50-U ... 612
UC-M70-UA ... 616
UC-M70-U ... 619
UC-MX70-U ... 622

Crestron Flex Accessories ... 626

ADPT-USB3.0-GBENET ... 627
Connecting ADPT-USB3.0-GBENET ... 627
Configuring ADPT-USB3.0-GBENET ... 628
ADPT-USB-ENET ... 633
CCS-UCA-MIC ... 634
Connecting CCS-UCA-MIC ... 634
CCS-UCA-SMK ... 637
Installing CCS-UCA-SMK ... 637
UC-CAMA-ADPT-ENET-USB ... 638
Key Features ... 638
Specifications ... 638
UCA-PWE-UC-2/UC-P8/P10 ... 640
Connecting UCA-PWE-UC-2/UC-P8/P10 ... 640

UCA-RMK-1U 642
Installing UCA-RMK-1U 642
UCA-SMK-UC2 and UCA-SMKR-UC2-3 645
Installing UCA-SMK-UC2 and UCA-SMKR-UC2-3 646
In the Box 646
Install the Swivel Mount Accessory 647
Connect and Dock the Tabletop Conference Device 651
UC-SB2-DMK 656
Mount the UC-SB2-DMK 657
Install the UC-SB2-DMK with a Wall Mount Bracket (Not Included) 663
UC-SB2-TTK 669
Install the Videobar 70 with UC-SB2-TTK 669

Crestron Flex Products (sold separately) 671

UC-AUDIO-HUB 672
Installing UC-AUDIO-HUB 672
UC-AUDIO-POD 673
Installing UC-AUDIO-POD 673
UC-CAM-L1 674
Installing UC-CAM-L1 675
CCS-CAM-USB-F-400 676
Mounting CCS-CAM-USB-F-400 676
In the Box (UC-CAM-WMK) 677
Installing the Wall Mount Kit 677
Choose a Location 677
Choose a Bracket 677
Secure the Bracket 678
Attach the Camera 680
Connect 680
UC-SB1 681
Mounting UC-SB1 681
In the Box 681
Connect 684
Operation 685
UC-SB1-CAM 686
Mounting UC-SB1-CAM 686
In the Box 686
Connect 689
Operation 690
UC-SB-P50 and UC-SB-P50-INDIA 691
Installing UC-SB-P50 and UC-SB-P50-INDIA 691

Crestron Flex Care (extended support) 692

UC-FLEXCARE 693
Key Features 693
Specifications 694

UC-FLEXCARE-C 696
Key Features 696
Specifications 697

Discontinued Solutions 699

Crestron Flex Room Solutions 700
UC-MM30-TA and UC-MM30-TA-I 702
UC-MM30-TA and UC-MM30-TA-I Features 702
UC-MM30-TA and UC-MM30-TA-I Installation 704
Crestron Flex P8/P10 Series Desk Phones and Displays 707
UC-P8 and UC-P10 Series Displays for Microsoft Teams Software 708
UC-P8 and UC-P10 Series Desk Phones for Microsoft Teams Software 709

Troubleshooting and Known Issues 710

Resources 711

Crestron Support 711
Crestron Training Institute (CTI) Portal 711
Security Reference Guides 711
Configuration Guides for Crestron Mercury and Mercury X 712
Product Information (Compliance) Sheet 713
Product Certificates 713
Programmer and Developer Resources 713

What's New?

December 23, 2024 (Doc ID: 9132L)

Included the UC-SB2-TTK on page 669 tabletop mounting bracket for the Crestron Videobar 70.

September 23, 2024 (Doc ID: 9132K)

Added the following new Crestron Flex solutions to the manual.

- UC-B70-A-T(-I) Features and Installation.
- UC-ENGINE-BRKT-T-UPGRD-BRKTX Installation.
- UC-ENGINE-BRKT-Z-UPGRD-BRKTX Installation.

September 06, 2024 (Doc ID: 9132J)

Added the installation instructions for UC-SB2-DMK, the display mounting kit (sold separately) for Crestron Videobar 70.

August 16, 2024 (Doc ID: 9132H)

Added the following new Crestron Flex solutions to the manual.

- UC-C100-PRO-Z Features and Installation.
- UC-C100-PRO-Z-WM Features and Installation.
- UC-CX100-PRO-Z Features and Installation.
- UC-CX100-PRO-Z-WM Features and Installation.

August 9, 2024 (Doc ID: 9132G)

Added the installation instructions for the following Crestron Flex solutions to the manual.

- UC-B30-T-GV Installation.
- UC-BX30-T-GV Installation.
- UC-C100-T-GV Installation.
- UC-CX100-T-GV Installation.

July 22, 2024 (Doc ID: 9132F)

Added the following new Crestron Flex solutions to the manual.

- UC-MM30-NC-T(-I) Features and Installation.
- UC-MMX30-NC-T(-I) Features and Installation.
- UC-M50-NC-T Features and Installation.
- UC-MX50-NC-T Features and Installation.
- UC-MM30-NC-Z(-I) Features and Installation.
- UC-MMX30-NC-Z(-I) Features and Installation.
- UC-M50-NC-Z Features and Installation.
- UC-MX50-NC-Z Features and Installation.
- UC-ENGINE-BRKT-T-UPGRD Features and Installation.
- UC-ENGINE-BRKTX-T-UPGRD Features and Installation.
- UC-ENGINE-BRKT-Z-UPGRD Features and Installation.
- UC-ENGINE-BRKTX-Z-UPGRD Features and Installation.
- UC-B30-T-GV Features.
- UC-BX30-T-GV Features.
- UC-C100-T-GV Features.
- UC-CX100-T-GV Features.

March 29, 2024 (Doc ID: 9132E)

- Included UC-B70-A-Z and UC-B70-A-Z-I on page 385.
- Included UC-CAMA-ADPT-ENET-USB on page 638 features and specifications.
- Revised M70 Series BYOD solutions features to include the reference to the UC-CAMA-ADPT-ENET-USB product page in the footnote.
- Revised all application scenarios in Room Design on page 25 for clarity.

February 26, 2024 (Doc ID: 9132D)

- All content regarding Crestron Flex room solutions, separately sold products, FlexCare, and accessories have been consolidated into a single document, offering a comprehensive overview of Crestron Flex Unified Communications solutions and products.

- Links to the product page of the selected Crestron Flex solution have been replaced with detailed product specifications and feature descriptions. For details, refer to:
    - Features on page 35 and Specifications and Dimension Drawings on page 72 (for Microsoft Teams® Rooms solution)
    - Features on page 320 and Specifications and Dimension Drawings on page 354 (for Zoom Rooms® solution)
    - Features on page 581 and Specifications and Dimension Drawings on page 598 (for Open-platform solutions)
- Links to the Quick Start guide of the selected Open-platform and Dell UC Engine-based Crestron Flex solution have been replaced with comprehensive installation instructions. For details, refer to:
    - Microsoft Teams Rooms with Dell UC Engine on page 110
    - Zoom Rooms with Dell UC Engine on page 393
    - Quick Start Guides on page 605
- The Crestron Settings app content has been revised to align with the new user interface. For details, refer to:
    - Crestron Settings App on page 298 (for Microsoft Teams® Rooms solution)
    - Crestron Settings App on page 555 (for Zoom Rooms® solution)
- Added links to Quick Start guides for discontinued solutions. For details, refer to Discontinued Solutions on page 699.
- The Resources on page 711 section has been revised to include:
    - Links to Security Reference Guides on page 711 for products related to Crestron Flex solutions.
    - Links to Configuration Guides for Crestron Mercury and Mercury X on page 712.
    - Links to Product Information (Compliance) Sheet on page 713 for Crestron Flex products.
    - Links to Product Certificates on page 713.
    - Links to Programmer and Developer Resources on page 713.

September 19, 2022 (Doc ID: 9132C)

Updated to reflect the discontinued solutions.

April 29, 2022 (Doc ID: 9132B)

Added links to the Quick Start guides for new room solutions to the product manual.

October 5, 2021 (Doc ID: 9132A)

Initial Release.

Overview

Crestron Flex room solutions are designed to present, call, conference, and collaborate reliably, securely, and seamlessly in any size conference room. These solutions are offered with native Microsoft Teams® Rooms, Zoom Rooms®, and open-platform UC software. You can start your meeting with one touch and control room lighting, shades, thermostats, and other equipment with the same control device. For more information on selecting or building your room solution, visit Crestron Flex Solutions.

> **NOTE:** Room control capability (lighting, shades, thermostats, etc.) requires additional equipment and commissioning provided by a Crestron authorized integrator and/or programmer. Additional costs may apply.

Crestron Flex Room solutions are categorized based on the room size and conferencing software, as detailed below:

Space	Number of People	Conferencing Software	Crestron Flex Solutions
Private Space / Desktop	Single person	• Microsoft Teams Rooms	• UC-MM30-TA • UC-MM30-TA-I
Huddle Space / Small Meeting Room	Up to 4	• Microsoft Teams Rooms • Zoom Rooms software	• UC-MM30 Series • UC-MMX30 Series • UC-B30 Series • UC-B31 Series • UC-BX30 Series • UC-BX31 Series
Medium Meeting Room	Up to 8	• Microsoft Teams Rooms • Zoom Rooms software • Open platform UC applications	• UC-M50 Series • UC-MX50 Series • UC-B70 Series
Large Meeting Room	Up to 10	• Microsoft Teams Rooms • Zoom Rooms software • Open platform UC applications	• UC-M70 Series • UC-MX70 Series • UC-B70 Series
Custom Meeting Room	Any	• Microsoft Teams Rooms • Zoom Rooms software	• UC-C100 Series • UC-CX100 Series

Intended Audience

This manual provides instructions and other technical resources to installers and platform administrators for setting up the Crestron Flex UC conference solutions.

Installers

The installer should have the following knowledge and skills:

- Crestron® technology
- Basic networking
- Basic AV
- Crestron Remote Control
- XiO Cloud® service

Platform Administrators

The administrator should have the following knowledge and skills.

For Microsoft Teams Rooms Solutions

- Microsoft Teams application
- Microsoft 365® cloud services
- Windows® 11 operating system troubleshooting

For Zoom Rooms Solutions

- Zoom Rooms configuration

System Hardware

Crestron Flex solutions are typically comprised of the following components:

- UC Engine Bracket Assembly on page 4
- Control Device on page 7
- Camera on page 10
- Intelligent Videobar on page 12
- UC-PR on page 14
- HDMI® over CATx Receiver on page 15
- Extension Microphone Pod on page 16

UC Engine Bracket Assembly

The UC Engine Bracket Assembly streamlines the installation of a Crestron Flex UC system by incorporating the UC Engine and content ingest device on one convenient mounting bracket. A bracket assembly is sold exclusively as part of a Crestron Flex UC video conferencing room solution.

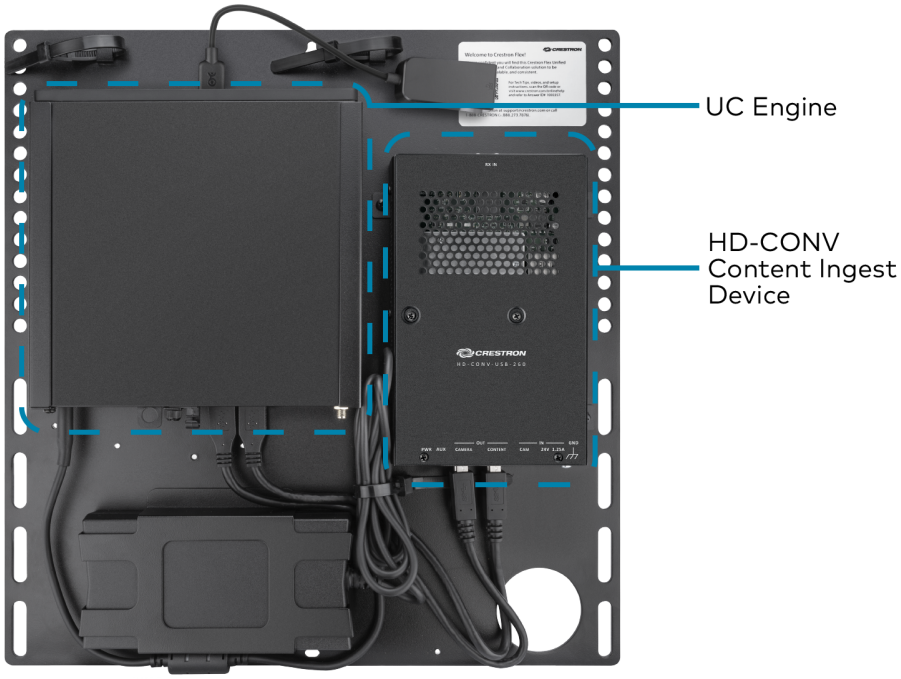

- **UC Engine**: A computer that runs the conferencing software. The computer model varies between systems but is referred to here as the UC Engine.
- **Content Ingest Device**: An ingest device that connects to the user's computer for sharing content with meeting attendees.

The complete assembly can be mounted on a wall, or it can be attached to the rear of a display device. A 1-gang sized cutout at the lower right-hand corner allows for mounting over a flush wall-mounted electrical box to manage wiring and conceal connections for a clean, secure installation.

The bracket assemblies are categorized as:

Standard Bracket Assembly

Crestron Flex solutions with a standard bracket assembly deliver a complete video conferencing solution except for the Bring Your Own Device (BYOD) functionality. Bracket assemblies come in various configurations, as shown below, and are shipped based on availability.

> **NOTE:** The shipped bracket assembly may look different from what appears on the Crestron website. However, all bracket assemblies offer the same functionality and performance as committed on the selected Crestron Flex solution's product specifications sheet or web page.

UC Bracket Assembly with Dell UC Engine and HD-CONV-USB-200

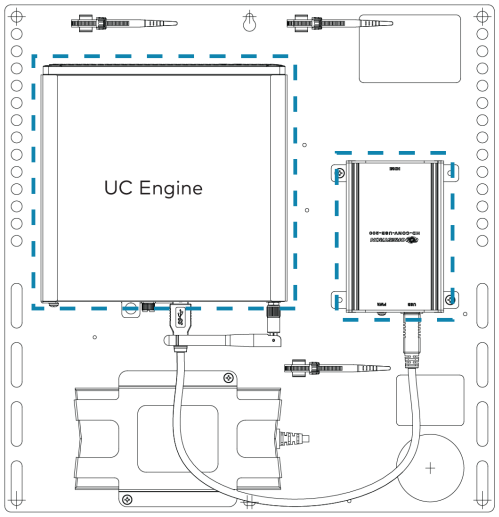

UC Bracket Assembly with Dell UC Engine and HD-CONV-USB-300

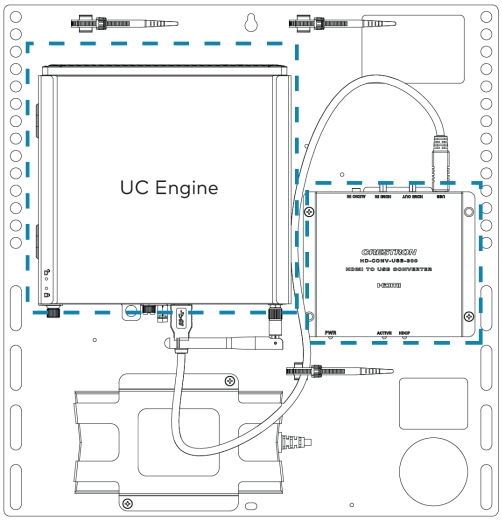

UC Bracket Assembly with ASUS UC Engine and HD-CONV-USB-200

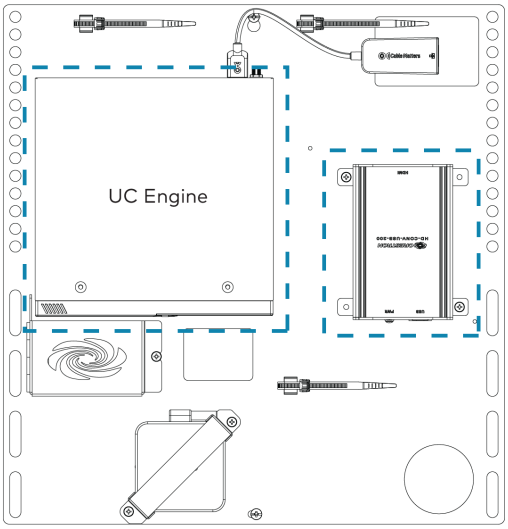

Premium Bracket Assembly

Crestron Flex solutions with a premium bracket assembly deliver a complete video conferencing solution, including the Bring Your Own Device (BYOD) functionality. Bracket assemblies come in various configurations, as shown below, and are shipped based on availability.

> **NOTE:** The shipped bracket assembly may look different from what appears on the Crestron website. However, all bracket assemblies offer the same functionality and performance as committed on the selected Crestron Flex solution's product specifications sheet or web page.

UC Bracket Assembly with Dell UC Engine and HD-CONV-USB-260

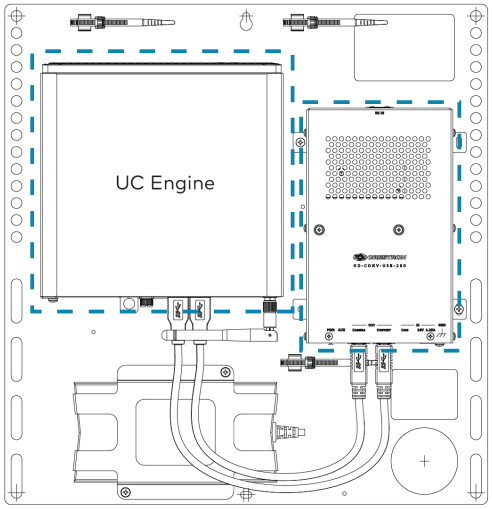

UC Bracket Assembly with ASUS UC Engine and HD-CONV-USB-260

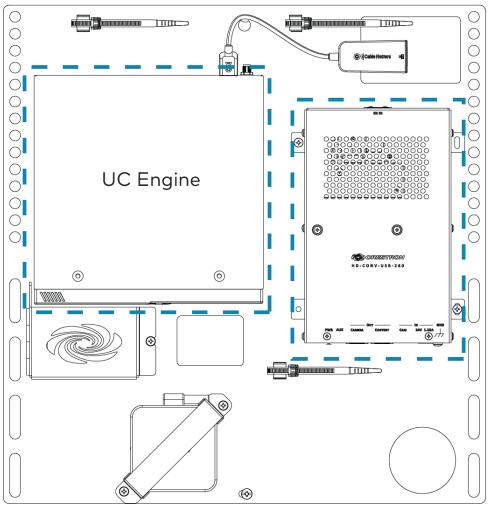

UC Bracket Assembly with ASUS UC Engine and HD-CONV-USB-250

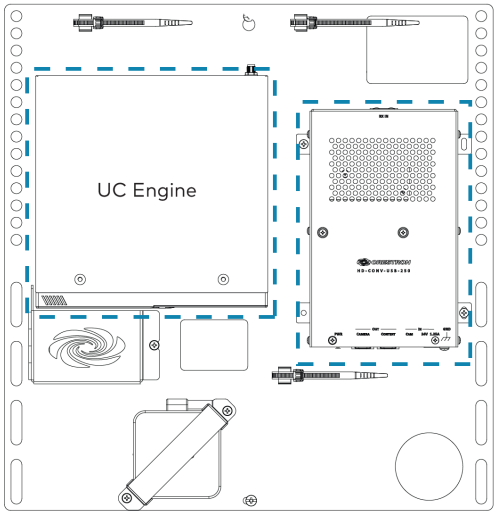

Control Device

A control device operates the conference system controls. Crestron Flex solutions typically use the following control devices:

Crestron Mercury and Mercury X Tabletop Conference Device

The Crestron Mercury / Mercury X Tabletop Conference System is a high-performance, full duplex conferencing speakerphone and touch screen controller with extensive connectivity for BYOD scenarios and UC conference systems.

> **NOTE:** The Crestron Mercury conference system receives and plays program audio for Crestron Flex through its built-in microphones and speaker.



Crestron Mini Tabletop Conference Device

The mini tabletop conference device is a full-featured VoIP conferencing speakerphone that facilitates conversations with exceptional audio fidelity and pickup using the device's integrated 360° quad microphone array. Its high-powered, full-range speaker produces high quality audio for both voice and program material. AEC technology achieves transparent full-duplex performance free of distracting echo or noise, and wideband audio codec support allows for full-spectrum, bidirectional voice communication.

> **NOTE:** The Crestron Mercury conference system receives and plays program audio for Crestron Flex through its built-in microphones and speaker.



Tabletop or Wall Mount Touch Screen

With a large 10.1 in. (257 mm) capacitive touch screen display, the Crestron touch screen provides superior conferencing control in meeting rooms, huddle spaces, and executive offices. The touch screen also offers optional control of room lighting, shades, thermostats, and other equipment.

Tabletop Touch Screen



Wall Mount Touch Screen

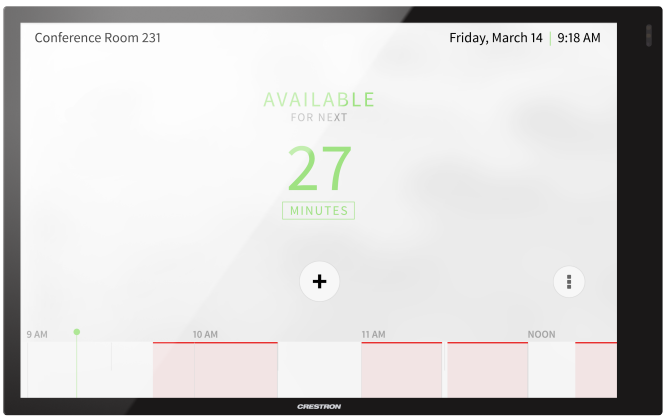

Camera

Crestron Flex solutions offer the following high-definition cameras based on the selected videoconferencing solution.

> **NOTE:** Some Crestron Flex solutions do not include a camera. These solutions require the installer to supply a USB conference camera.

UC-CAM-L1

The UC-CAM-L1 is an intelligent, high-definition collaboration camera compatible with Crestron Flex large meeting room videoconferencing solutions. It features a wide-angle 103° diagonal field of view to capture an entire conference room with Full HD 1080p resolution. High precision aspherical optics, a 20.30 MP 1 in. CMOS sensor, portrait lighting, and advanced video processing ensure an immersive, crystal clear video image free from light or noise artifacts or optical aberrations. The camera has no moving parts, ensuring quiet operation, reliability, and accuracy while adjusting Pan, Tilt and Zoom functions.



CCS-CAM-USB-F-400

Compact in size, yet tremendous on performance, the CCS-CAM-USB-F-400 camera features an ultra wide-angle 150° diagonal field of view to capture an entire conference room with Full HD 1080p resolution. High precision aspherical optics, a 12 MP CMOS sensor, and advanced video processing ensure an immersive, crystal clear video image free from light or noise artifacts or optical aberrations. The camera has no moving parts, ensuring quiet operation, reliability, and accuracy.



Intelligent Videobar

Crestron Flex solutions offer the following intelligent videobars based on the selected videoconferencing solution.

NOTES:

- Crestron Flex solutions supplied with a Crestron Mercury conference system do not include a Crestron Flex Soundbar. The Crestron Mercury conference system receives and plays program audio through its built-in microphones and speaker.
- Some Crestron Flex solutions do not include a Crestron Mercury conference system or Crestron Flex Soundbar. These solutions require the installer to supply audio equipment to receive and play program audio.

UC-SB2-CAM-A-Z

The powerful and elegant all-in-one (AIO) Crestron Videobar 70 provides a convenient and compact conferencing solution for medium to large-sized meeting rooms. It comprises:

- A quad-camera setup that captures the full room in 4K, automatically tracks and frames the presenter or everyone in the room based on its configuration, and enhances the video content using AI.
- 10-watt dual speakers produce full, rich, and natural-sounding audio. Additional digital signal processing with AEC and noise reduction assures optimal sound quality for an immersive experience.
- Integrated 24-microphone array to capture voices throughout the room using adaptive beamforming technology. AI noise cancellation is also provided to ensure crystal-clear communication with exceptional audio fidelity and pickup.
- Android™ OS running on the QCS8250 chipset that ensures a smooth and reliable conferencing experience every time.



UC-SB1-CAM-FLEX

The Crestron UC Video Conference Smart Soundbar & Camera is a front-of-room device that eliminates the need to install additional microphones, speakers, or cameras in a conference space. Mounted on the wall or placed on a credenza beneath the room display(s), the smart soundbar looks great and sounds even better in a small to medium-sized meeting space.



UC-SB-P50(-INDIA)

The Jabra® PanaCast® 50 intelligent videobar for Crestron Flex systems combines microphones, speakers, and cameras in one front-of-room device. High-quality speakers and microphones deliver exceptional full-duplex performance in a small to medium-sized meeting space. Three built-in conferencing cameras capture the room in panoramic 4K resolution with a seamless 180° horizontal field of view. The Jabra PanaCast 50 is optimized for all leading UC platforms, including both Microsoft Teams Rooms and Zoom Rooms software.

For more information on the Jabra PanaCast 50 video bar for Crestron Flex systems, refer to Jabra PanaCast 50.



UC-PR

The UC Presentation Transmitter provides the BYOD functionality by switching to the connected laptop's UC platform and returning to the native Microsoft Teams Rooms or Zoom Rooms platform when disconnected.



HDMI® over CATx Receiver

The HD-RX-USB-2000-C HDMI® over CATx receiver brings the BYOD functionality by enabling high-definition video presentations from all types of BYOD sources. The HD-RX-USB-2000-C is a receiver for uncompressed HDMI®, CEC, RS-232, Ethernet, and IR signals sent from a CCS-UC-1-X Crestron Mercury® X Tabletop Conference System. It is intended for use with the CCS-UC-1-X, the CCS-CAM-USB-F-400 camera, and a single HD or UHD display device (not included).

NOTES:

- The HDMI over CATx Receiver is required only for Crestron Flex kits using a Crestron Mercury X Tabletop Conference device for open-platform UC applications.
- This product is not addressable from a control system and offers no programmable functionality. Video, audio, CEC, IR, Ethernet, and RS-232 signals are simply passed through.



Extension Microphone Pod

The CCS-UCA-MIC is a low-profile extension microphone pod designed exclusively for use with a Crestron Flex Tabletop Conference System. Up to two mic pods may be connected to a single conference device to extend its pickup range to cover large tables.

Optionally, two microphone pods may be daisy-chained, or connected to the mic pod ports on the rear of the conference device, using the cables provided with each microphone pod.

> **NOTE:** The extension microphone pod can only connect to a Crestron Mercury or Crestron Mercury X tabletop conference device.



Getting Started

The following instructions are intended to expedite a Crestron® Flex conference room solution deployment by offering essential information and links for installation, configuration, troubleshooting, and maintenance.

In addition, the Crestron Flex Product Manual can be accessed by scanning the QR code on the product information sheet included with the solution or from the Resources section of the product page.

Pre-Deployment

Before proceeding with the installation, ensure the following pre-deployment checklist and license requirements are fulfilled.

Pre-Deployment Checklist

Task	Requirement	Notes
Verify Accounts/Configure Solution	Microsoft Teams® Rooms account credentials	Account credentials are required to log in to Microsoft Teams Rooms. When purchasing a Crestron Flex solution for use with Microsoft Teams Rooms, the Microsoft Teams desktop client is preinstalled on the UC-ENGINE. For guidelines on configuring accounts for Microsoft Teams Rooms, visit Configure accounts for Microsoft Teams Rooms.
	Zoom Rooms® account credentials	When purchasing a Crestron Flex solution for Zoom Rooms, the Zoom Rooms desktop client is preinstalled on the UC-ENGINE. For guidelines on how to configure accounts for Zoom Rooms, visit Setup & Configuration in the Zoom Rooms Help Center.
Confirm Connection Points	Two (2) Gigabit LAN Ports	Ensure the installation space has two available gigabit LAN ports connected to the same VLAN on the same network.

Task	Requirement	Notes
Configure Network Server	Configure your network to provide an IP address using DHCP.	**For Microsoft Teams Rooms**: The UC-ENGINE and tabletop devices communicate over a VLAN network connection and require access to the internet. Port 49500 is used by default. > **NOTE:** Upon initial startup, Microsoft Teams Rooms may not be configured with a static IP address. Run the Microsoft® Network Assessment Tool to confirm that your network is properly configured. For more information, visit Evaluate my environment.
		For Zoom Rooms: Crestron Flex solution for Zoom Rooms does not require tabletop devices to communicate directly with the UC-ENGINE. However, each device requires internet access to the Zoom® cloud service.
Establish Network Communications	Open the required TCP and UDP ports.	Open TCP ports 80 and 443 and UDP ports 3478 through 3481. The TCP ports are used to connect to Microsoft's Online Services, such as SharePoint™ Online, Exchange Online, and the Teams Chat services. For more information, visit Prepare your network.
		Open TCP ports 80, 443, 8801, and 8802. Open UDP ports 3478, 3479, and 8801 through 8810. For more information, visit Network Firewall or Proxy Server Settings for Zoom and Firewall Configuration for Zoom Rooms.

Licenses Required:

- For Microsoft Teams Rooms Solutions:
  - A Microsoft Teams Rooms provisioned account
  - Microsoft 365 administrator access to create resource accounts and assign licenses. For more information on required licenses, visit Online Licensing.
- For Zoom Rooms Solutions:
  - A Zoom Rooms account or activation code to set up a Zoom Rooms system
  - Zoom Rooms administrator access to create and modify Zoom rooms.

Hardware Installation and Connections

To verify the contents of the kit, perform hardware installation, and make connections, select the hyperlinked SKU name in the table below:

	Microsoft Teams Rooms Software	Zoom Rooms Software	Open-Platform Software
B-Series Small Room Solutions	UC-B30-T	UC-B30-Z	
	UC-B30-T-WM	UC-B30-Z-WM	
	UC-BX30-T	UC-BX30-Z	
	UC-BX30-T-WM	UC-BX30-Z-WM	
	UC-B30-T-GV	-	-
	UC-BX30-T-GV	-	-
	UC-B31-T	UC-B31-Z	
	UC-B31-T-WM	UC-B31-Z-WM	
	UC-BX31-T	UC-BX31-Z	
	UC-BX31-T-WM	UC-BX31-Z-WM	
	UC-B31-T-INDIA	UC-B31-Z-INDIA	
	UC-B31-T-WM-INDIA	UC-B31-Z-WM-INDIA	
	UC-BX31-T-INDIA	UC-BX31-Z-INDIA	
	UC-BX31-T-WM-INDIA	UC-BX31-Z-WM-INDIA	

	Microsoft Teams Rooms Software	Zoom Rooms Software	Open-Platform Software
AIO B70 Solutions	UC-B70-A-T	UC-B70-A-Z	-
	UC-B70-A-T-I	UC-B70-A-Z-I	-
C-Series Custom Room Solutions	UC-C100-T	UC-C100-Z	
	UC-C100-T-WM	UC-C100-Z-WM	
	UC-CX100-T	UC-CX100-Z	
	UC-CX100-T-WM	UC-CX100-Z-WM	
	UC-C100-T-GV	-	-
	UC-CX100-T-GV	-	-
	-	UC-C100-PRO-Z	-
	-	UC-C100-PRO-Z-WM	-
	-	UC-CX100-PRO-Z	-
	-	UC-CX100-PRO-Z-WM	-
MM-Series Small Room Solutions	UC-MM30-T	UC-MM30-Z	
	UC-MM30-T-I	UC-MM30-Z-I	
	UC-MMX30-T	UC-MMX30-Z	
	UC-MMX30-T-I	UC-MMX30-Z-I	
	UC-MM30-NC-T	UC-MM30-NC-Z	
	UC-MM30-NC-T-I	UC-MM30-NC-Z-I	
	UC-MMX30-NC-T	UC-MMX30-NC-Z	
	UC-MMX30-NC-T-I	UC-MMX30-NC-Z-I	
M-Series Medium Room Solutions	UC-M50-T	UC-M50-Z	UC-M50-UA
	UC-MX50-T	UC-MX50-Z	UC-M50-U
	UC-M50-NC-T	UC-M50-NC-Z	UC-MX50-U
	UC-MX50-NC-T	UC-MX50-NC-Z	
M-Series Large Room Solutions	UC-M70-T	UC-M70-Z	UC-M70-UA
	UC-MX70-T	UC-MX70-Z	UC-M70-U
	UC-M70-NC-T	UC-M70-NC-Z	UC-MX70-U
	UC-MX70-NC-T	UC-MX70-NC-Z	

	Microsoft Teams Rooms Software	Zoom Rooms Software	Open-Platform Software
Upgrade Solutions	UC-ENGINE-BRKT-T-UPGRD	UC-ENGINE-BRKT-Z-UPGRD	
	UC-ENGINE-BRKTX-T-UPGRD	UC-ENGINE-BRKTX-T-UPGRD	
	UC-ENGINE-BRKT-T-UPGRD-BRKTX	UC-ENGINE-BRKT-Z-UPGRD-BRKTX	

Configuration

For **Microsoft Teams Rooms** Configuration, refer to the following links for details:

- Microsoft Teams Rooms Software Updates
- Crestron Settings App
- Switching from Microsoft Teams Rooms to Zoom Rooms

For **Zoom Rooms** Configuration, refer to the following links for details:

- Zoom Rooms Software Updates
- Crestron Settings App
- Switching from Zoom Rooms to Microsoft Teams Rooms
- Custom Controls on a Zoom Rooms System
- Crestron Control for Zoom Rooms Software

Operation

For instructions on using a Microsoft Teams Rooms solution, visit Getting Started with a Microsoft Teams Rooms Solution.

For instructions on using a Zoom Rooms solution, visit Getting Started with a Zoom Rooms Solution.

Troubleshooting

Refer to the following online help articles for troubleshooting:

- Crestron Flex Room Solutions
- Crestron Mercury Conferencing Device
- Other Unified Communications Devices

Maintenance

Refer to the following key online help articles for information about maintaining a Crestron Flex solution:

1. Crestron Flex: Manually Updating Firmware: https://community.crestron.com/s/article/id-1000862
2. Crestron Flex: Current Firmware Versions: Details on software and firmware versions compatible with Crestron Flex deployments for Microsoft Teams® Rooms or Zoom Rooms®. https://community.crestron.com/s/article/id-1000397
3. Gathering Logs from Crestron Flex Systems: Instructions for Teams and Zoom. https://community.crestron.com/s/article/id-1000347
4. Crestron Flex: ASUS® Computer Recovery Image: https://community.crestron.com/s/article/2902
5. Crestron Flex: DELL® 7080 Computer Recovery Image: https://community.crestron.com/s/article/2896
6. Crestron Flex: ASUS® Compute Not Outputting HDMI® Video – Solution: https://community.crestron.com/s/article/3002
7. Crestron Remote Client: https://community.crestron.com/s/article/id-1000725
8. Dell CMOS : https://community.crestron.com/s/article/2959

Known Issues

Visit Known Issues for the most recent problems impacting Crestron products and services.

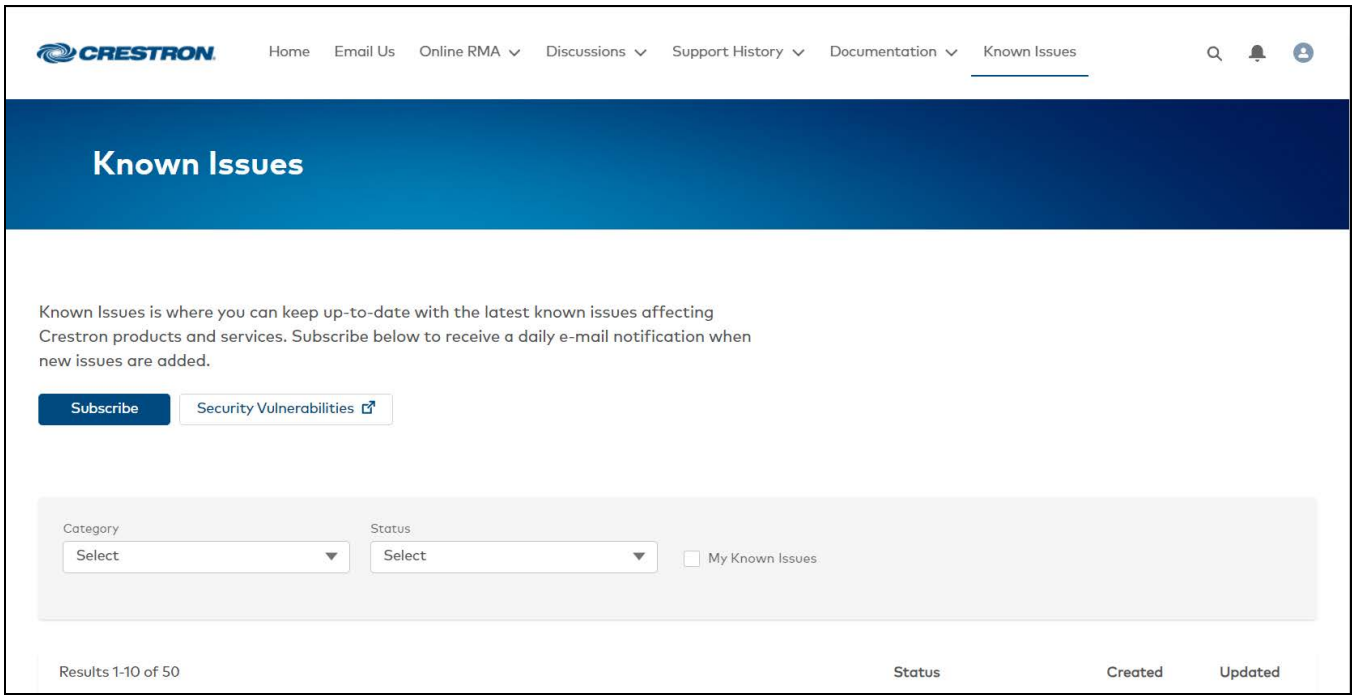

To filter the known issues for Crestron Flex:

1. Select the Category drop-down button.

   A list of product categories appears.

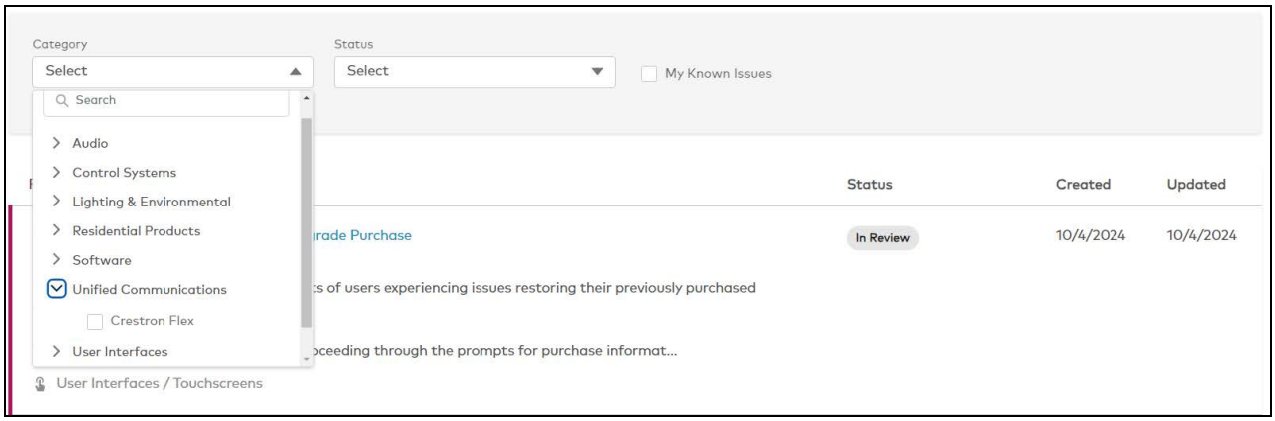

2. Select **Unified Communications** > **Crestron Flex**.

   The relevant known issues for Crestron Flex will be displayed

   Optionally, you can enter the product category name in the search bar and then select **Crestron Flex**.

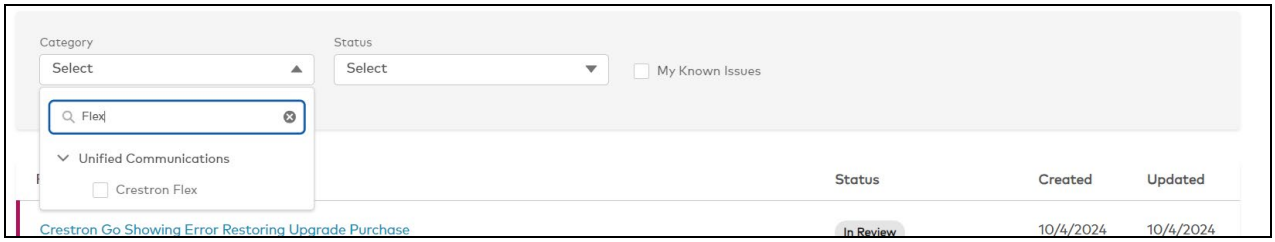

Room Design

The room designs for Crestron Flex are based on the conference room size, conferencing software, and control device.

> **NOTE:** These room designs show a typical hardware arrangement in a small, medium, large, or custom room. Hardware combinations may differ based on the selected Crestron Flex solution.

This section provides the following information:

- Small Room Application
- Medium Room Application
- Large Room Application
- Custom Room Application

Small Room Application

Scenario 1: Tabletop video conferencing system

- **Conferencing software**: Microsoft Teams Rooms or Zoom Rooms
- **Control device**: Mini Tabletop conference device
- **Applicable to**: MM30 / MMX30 series conferencing solutions

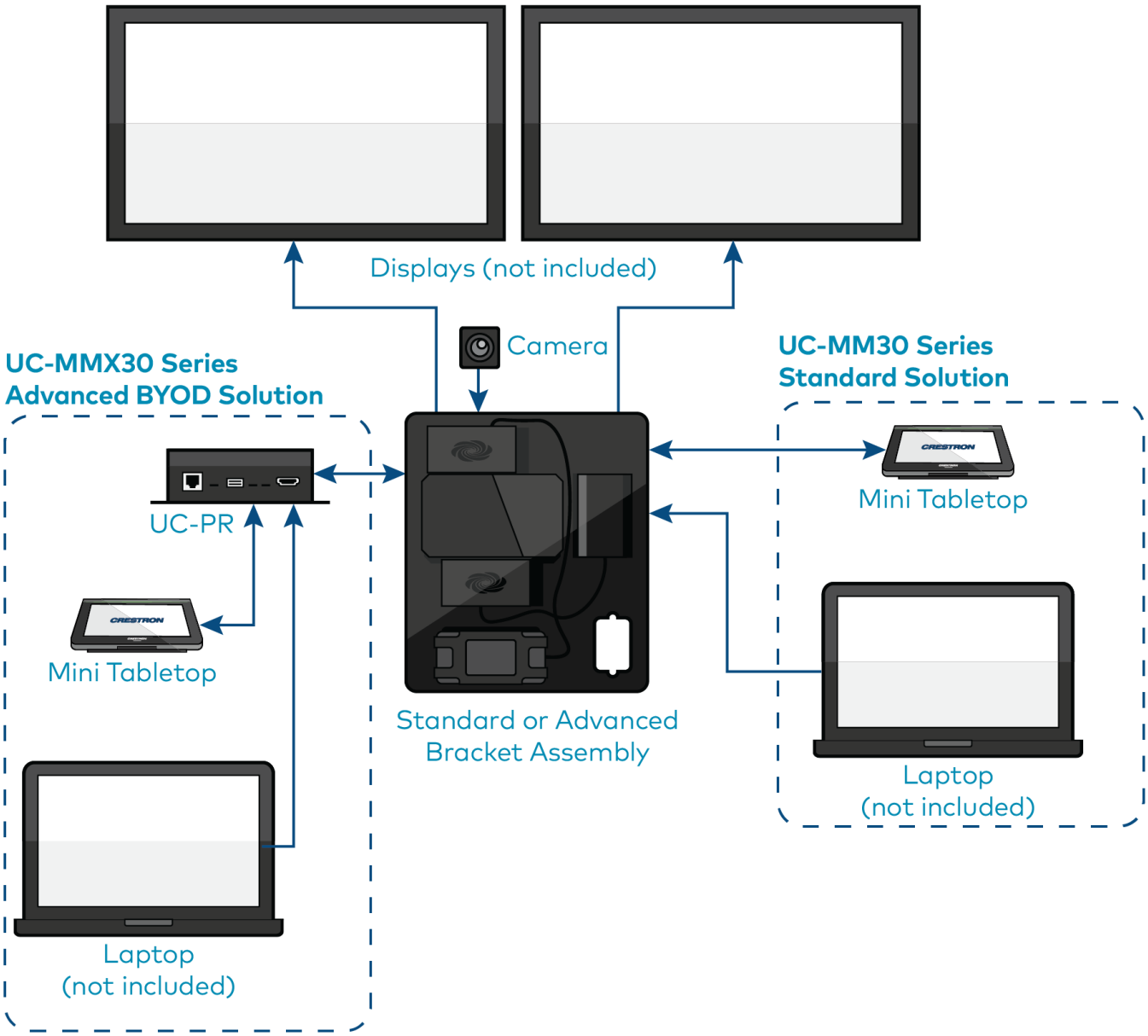

Scenario 2: Front-of-room video conferencing system

- **Conferencing software**: Microsoft Teams Rooms or Zoom Rooms
- **Control device**: Wall mount or surface mount touch screen
- **Applicable to**: B30 / BX30 and B31 / BX31 series conferencing solutions

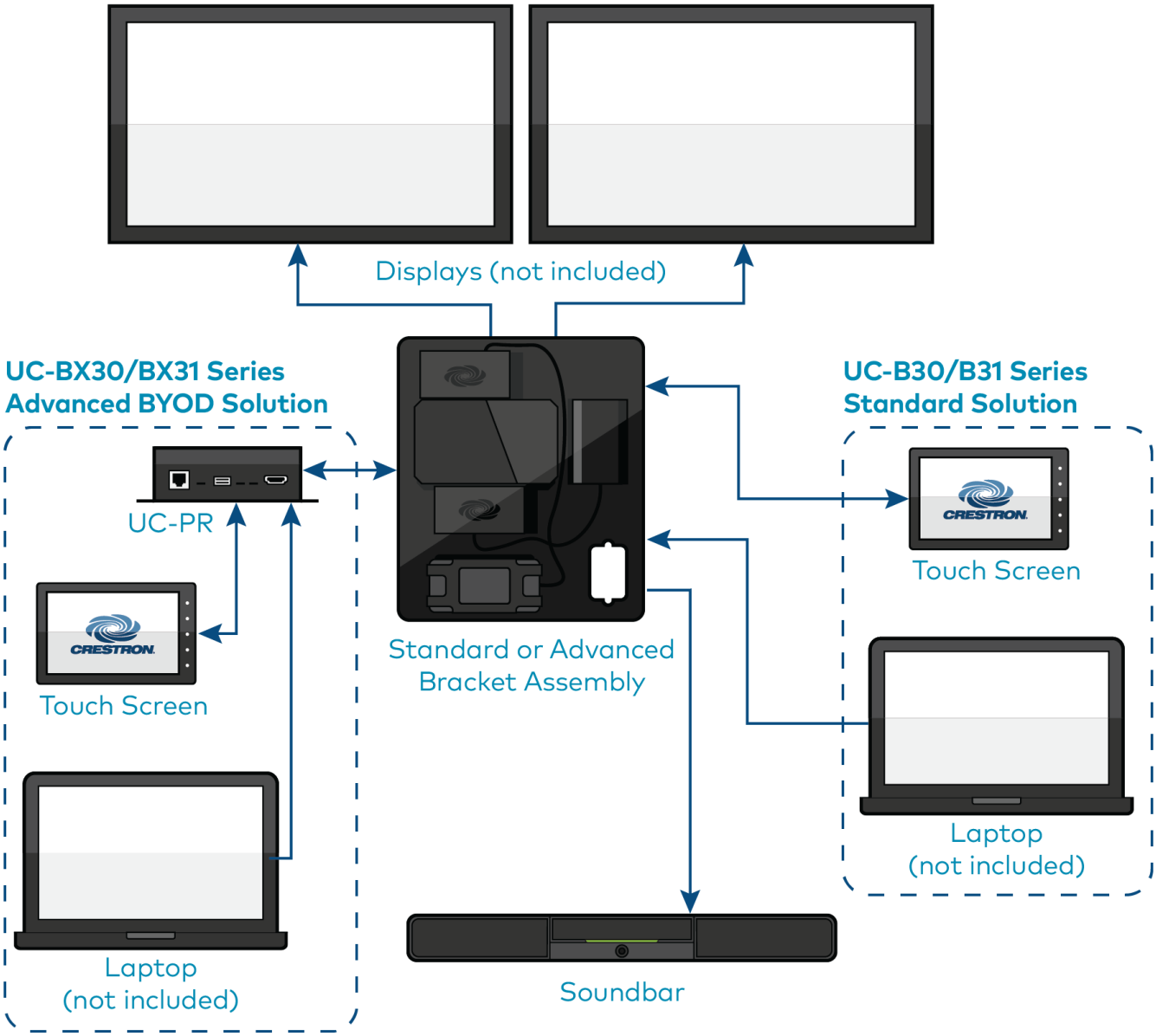

Medium Room Application

Scenario 1: Tabletop video conferencing system

- **Conferencing software**: Microsoft Teams Rooms or Zoom Rooms
- **Control device**: Crestron Mercury or Crestron Mercury X
- **Applicable to**: M50 / MX50 series conferencing solutions

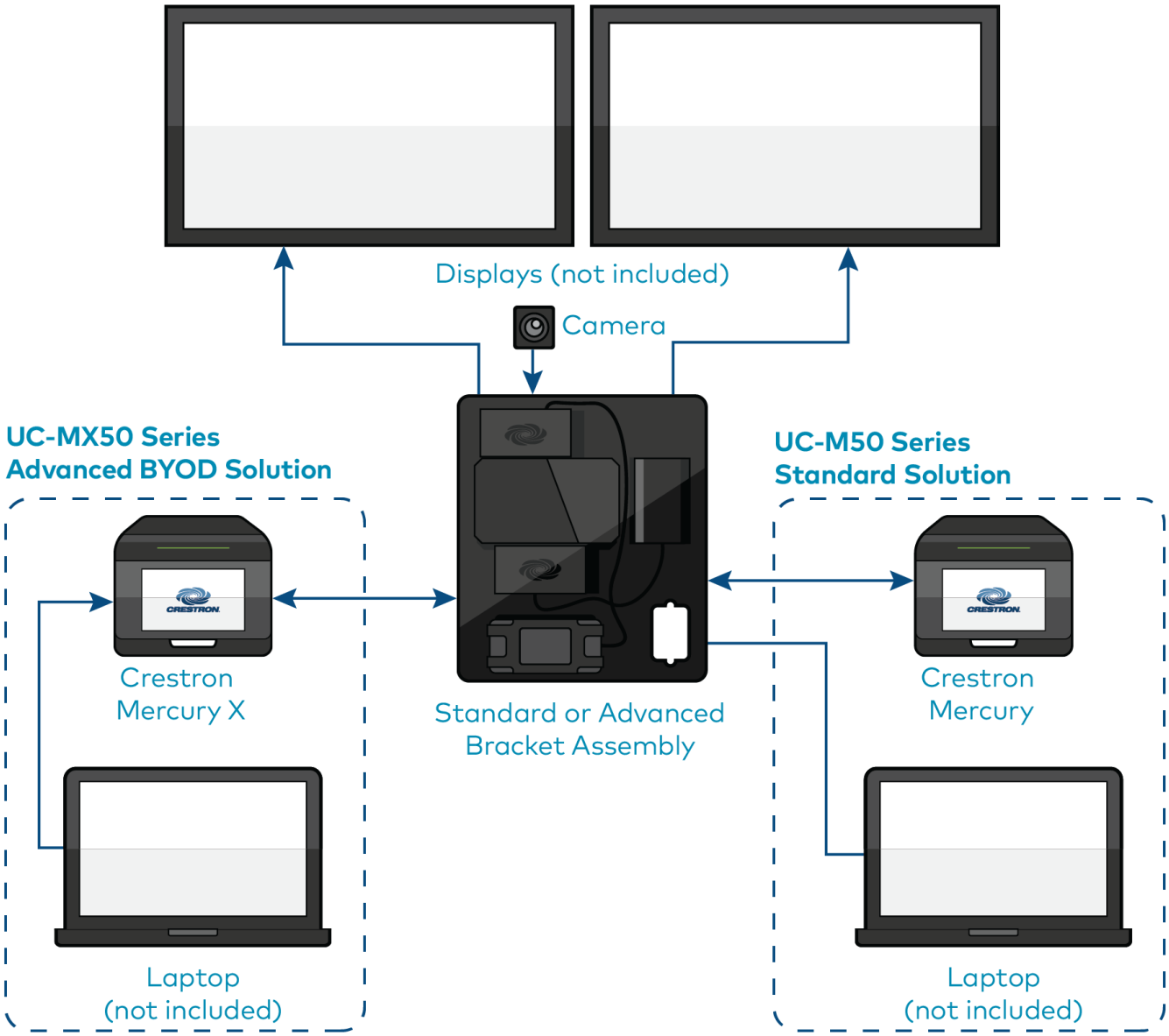

Scenario 2: Tabletop video conferencing system

- **Conferencing software**: Open-platform UC applications
- **Control device**: Crestron Mercury or Crestron Mercury X
- **Applicable to**: M50 / MX50 series conferencing solutions

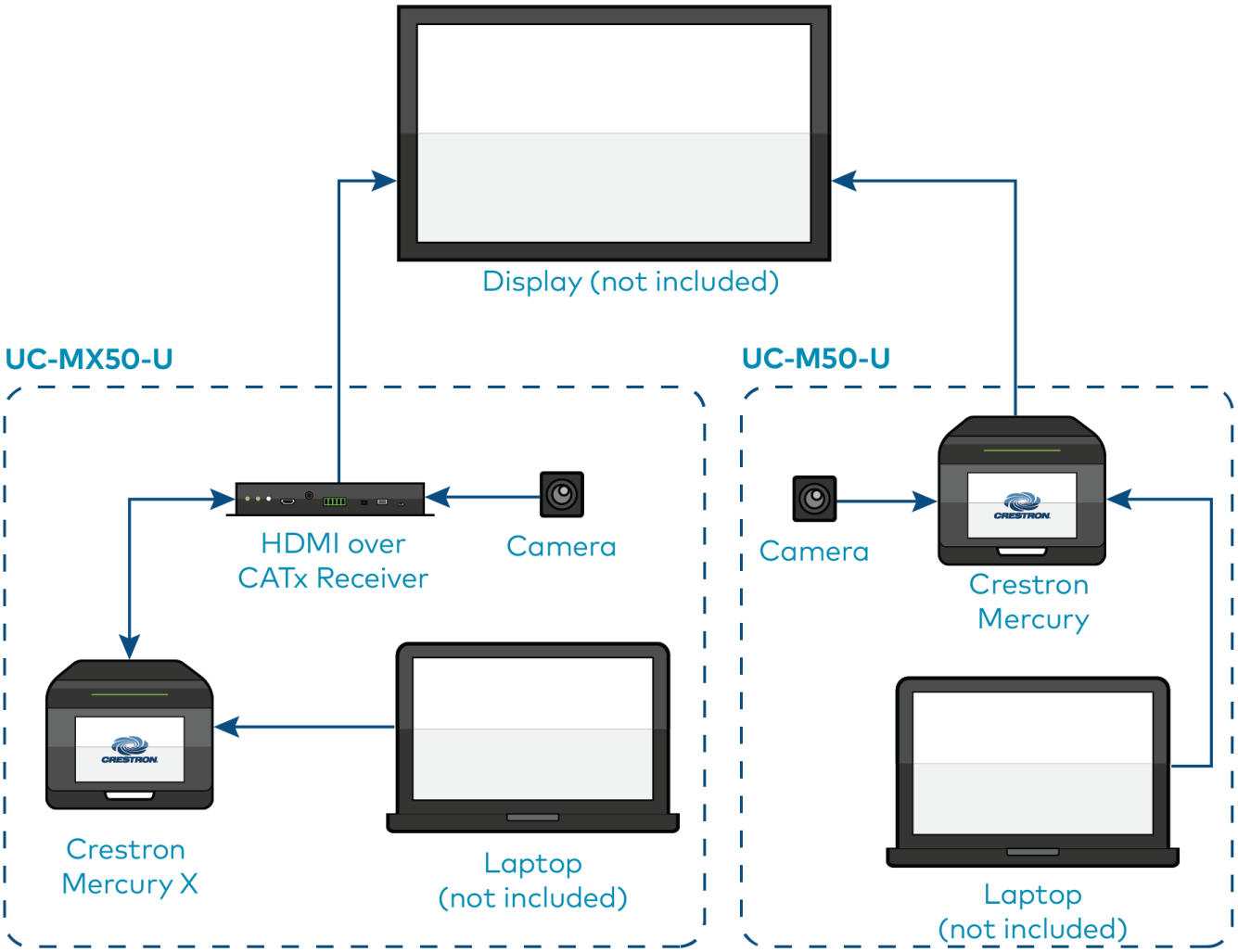

Scenario 3: Front-of-room video conferencing system

- **Conferencing software**: Zoom Rooms
- **Control device**: Wall mount or surface mount touch screen
- **Applicable to**: B70 series conferencing solutions

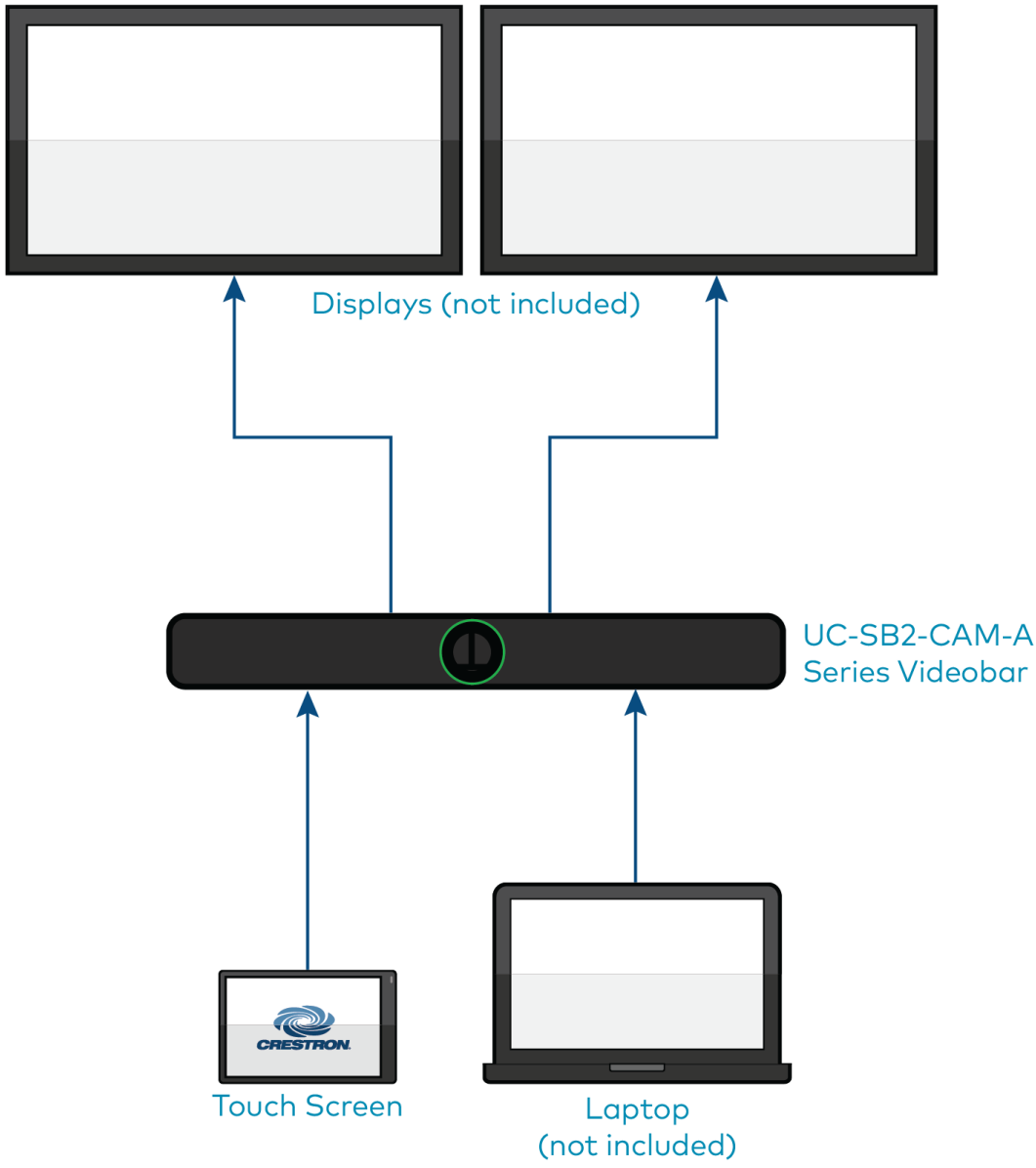

Large Room Application

Scenario 1: Tabletop video conferencing system

- **Conferencing software**: Microsoft Teams Rooms or Zoom Rooms
- **Control device**: Crestron Mercury or Crestron Mercury X
- **Applicable to**: M70 / MX70 series conferencing solutions

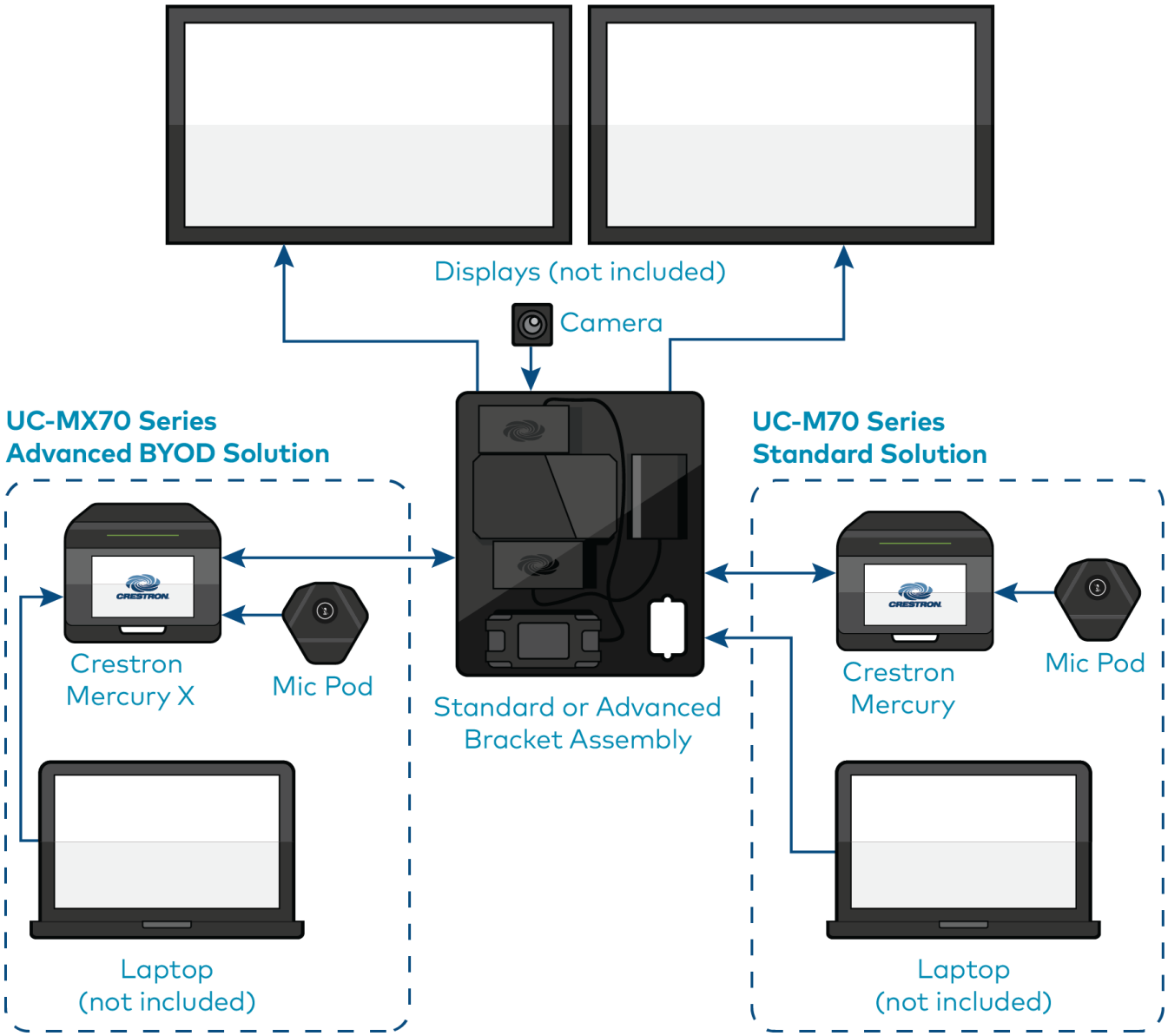

Scenario 2: Tabletop video conferencing system

- **Conferencing software**: Open-platform UC applications
- **Control device**: Crestron Mercury or Crestron Mercury X
- **Applicable to**: M70 / MX70 series conferencing solutions

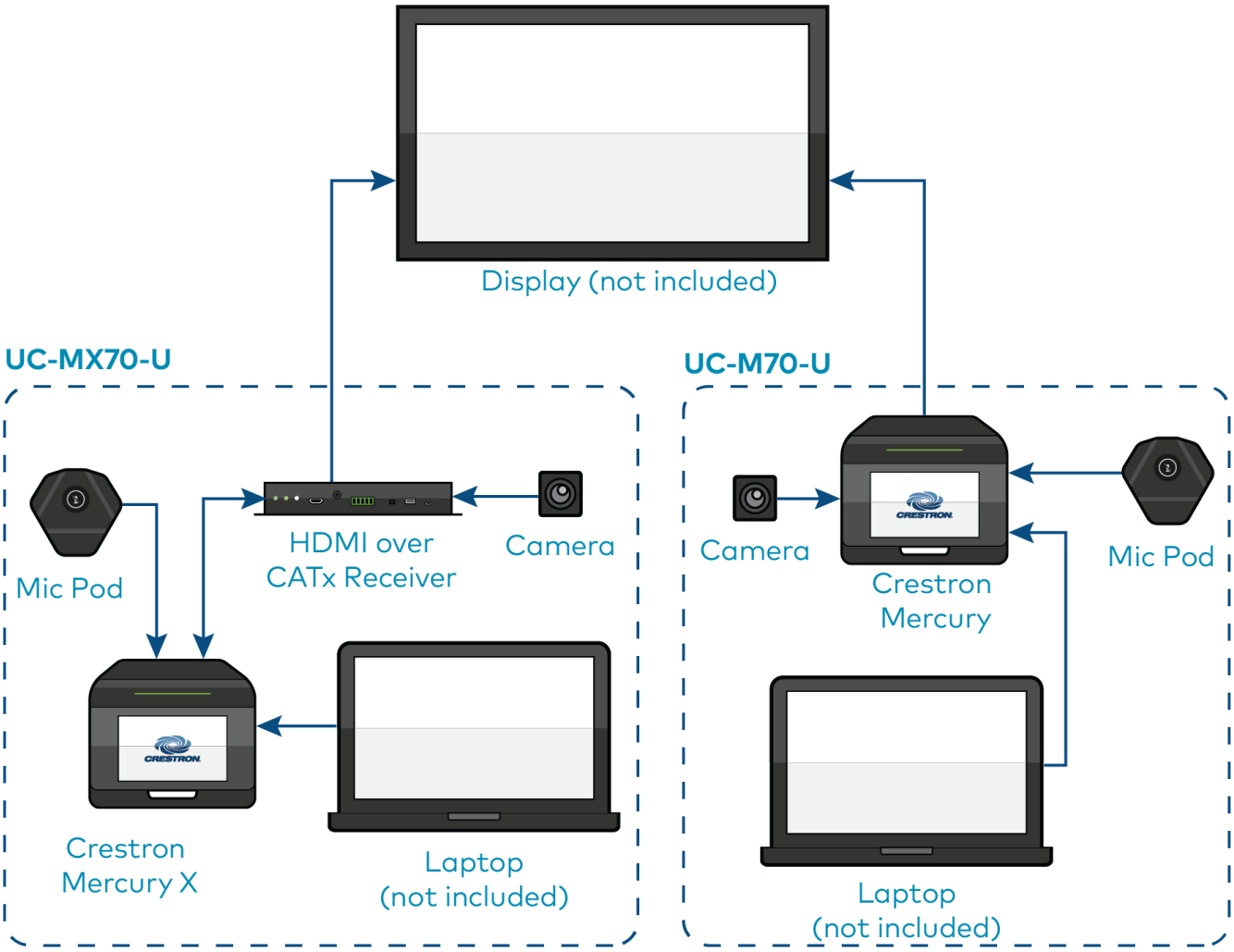

Scenario 3: Front-of-room video conferencing system

- **Conferencing software**: Zoom Rooms
- **Control device**: Wall mount or surface mount touch screen
- **Applicable to**: B70 series conferencing solutions

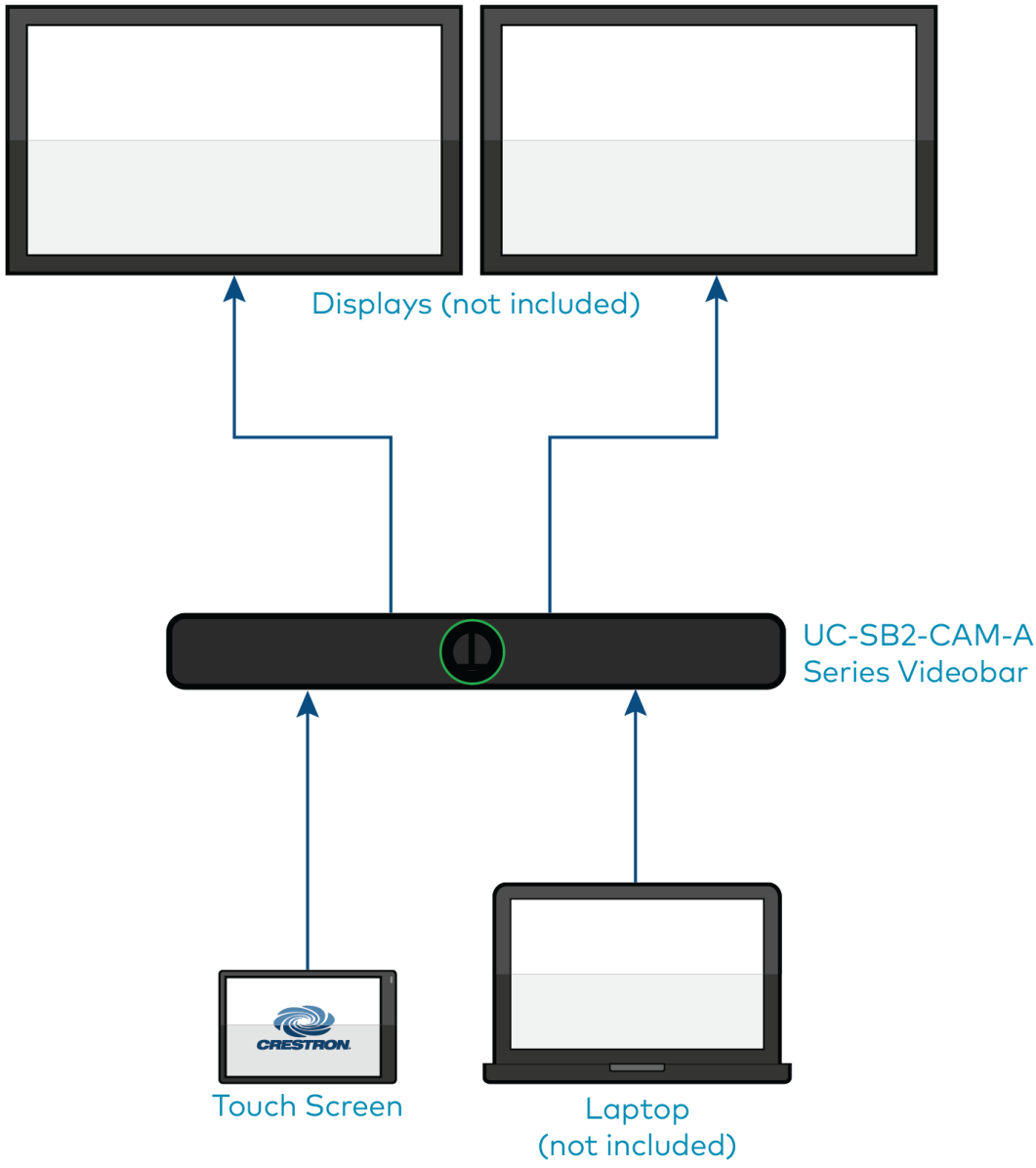

Custom Room Application

- **Conference room size**: Custom (audio and video devices need to be purchased separately)
- **Conferencing software**: Microsoft Teams Rooms or Zoom Rooms
- **Control device**: Wall mount or surface mount touch screen
- **Applicable to**: C100 / CX100 series conferencing solutions

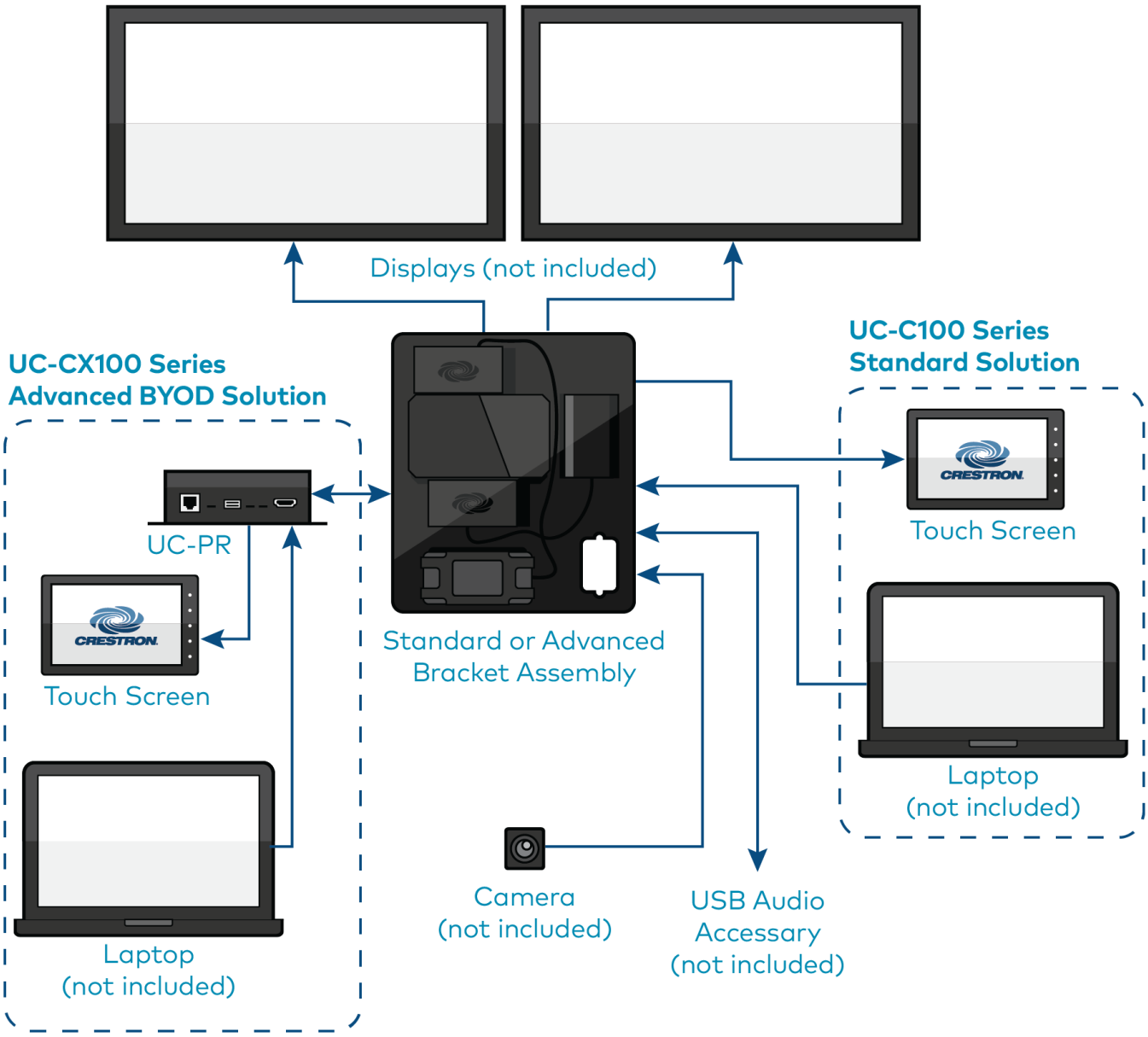

Microsoft Teams® Rooms Solution

Crestron Flex makes any space a productive Microsoft Teams Room. From hotdesking to training rooms, Crestron Flex products deliver the optimum audio and video to each space. With the ease of one-touch join and the ability to effortlessly move a meeting from the desktop to the conference room, Crestron Flex enables teams to work together more efficiently. For more details regarding Crestron Flex and Microsoft Teams collaboration, refer to Crestron Flex + Microsoft Teams.

Select the following sections to learn about the product features, specifications, installation, configuration, and operation for all UC B30/BX30, C100/CX100, MM30/MMX30, M50/MX50, and M70/MX70 series Microsoft Teams Rooms solutions.

Features

Refer to the following sections for more information on the features provided by various Microsoft Teams Rooms solutions.

UC-B30-T and UC-B31-T Series Features

The UC-B30-T and UC-B31-T series standard Crestron Flex tabletop front-of-room video conferencing system provides a small room video conference solution for use with Microsoft Teams® Rooms software. It supports single or dual video displays[1] (not included).

The government version, UC-B30-T-GV, is a TAA-compliant conference solution suitable for government deployments.

UC-B30-T/ UC-B30-T-GV



UC-B30-T-WM



UC-B31-T / UC-B31-T-INDIA



UC-B31-T-WM / UC-B31-T-WM-INDIA



Included Components

	UC-B30-T	UC-B31-T(-INDIA)	UC-B30-T-GV	UC-B30-T-WM	UC-B31-T-WM(-INDIA)
UC-SB1-CAM-FLEX	✓	✗	✓	✓	✗
UC-SB-P50 or UC-SB-P50-INDIA	✗	✓	✗	✗	✓
TS-1070-B-S-T-V	✓	✓	✗	✗	✗
TS-1070-GV-B-S	✗	✗	✓	✗	✗
TSW-1070-B-S-T-V	✗	✗	✗	✓	✓
UC-BRKT-200-S-T-ASSY	✓	✓	✓	✓	✓
PoE Injector	✓	✓	✗	✓	✓
Cables	✓	✓	✓	✓	✓

To view the specifications and dimensions of the included components of the selected kit, refer to Specifications and Dimension Drawings.

Key Features

- Front-of-room video conferencing solution for a Microsoft Teams Rooms environment
- Native Microsoft Teams Rooms touch screen UI provides a consistent user experience with simple operation and one-touch meeting joins
- Optional integration with Crestron control systems
- Direct connection option between UC Engine and touch screen for simple installation and configuration
- Network management and provisioning, system alerts, and the pairing of the touch screen to the system's UC Engine through the XiO Cloud service
- Supports single or dual video displays (not included)
- Easy to specify and install — no custom design, programming, or software installation required
- Enterprise-grade security — connects and communicates securely over any enterprise or SMB network
- Premium-level support with Crestron Flex Care (optional)

Native Microsoft Teams Rooms Experience

The conferencing solution brings the full Microsoft Teams Rooms UC experience to any meeting space in an enterprise or SMB facility.

Intuitive User Interface

With a large 10.1 in. (257 mm) capacitive touch screen display, the Crestron tabletop or wall mount touch scree provides superior conferencing control in meeting rooms, huddle spaces, and executive offices. The touch screen also offers optional control of room lighting, shades, thermostats, and other equipment.[2]

Using the bracket provided with the wall mount touch screen, the touch screen is easily installed over a 2-gang or 3-gang US electrical box, or a 2-gang European or UK electrical box. A security latch option is included to deter unauthorized removal of the touch screen.

Simplified Deployment

The UC Bracket Assembly provides preassembled components on one ready-to-mount bracket to simplify installation. The assembly can be mounted on a wall, or it can be attached to the rear of the display device. Crestron's direct connection method further simplifies installation with a single connection from the touch screen to the UC Bracket Assembly.[3]

High-Definition Video Conferencing with Impressive Audio

UC-SB1-CAM-FLEX: High-quality speakers, microphone, and digital signal processing deliver exceptional full-duplex speakerphone performance from the Crestron UC video conference soundbar and camera (UC-SB1-CAM-FLEX). The built-in conferencing camera captures the room in HD 1080p video resolution and with an ultra-wide 150° diagonal field of view.

UC-SB-P50 or UC-SB-P50-INDIA: High-quality speakers and microphones deliver exceptional full-duplex performance from the Jabra PanaCast 50 video bar for Crestron Flex systems (UC-SB-P50 or UC-SB-P50-INDIA). Three built-in conferencing cameras capture the room in panoramic 4K resolution with a seamless 180° horizontal field of view.

Visit jabra.com/panacast50 for more information on the Jabra PanaCast 50 video bar for Crestron Flex systems.

Crestron Control System Integration

The conferencing solution can integrate with a Crestron control system to enable touch screen control of room lighting, motorized window shades, climate control, AV, and other amenities.[2]

Enterprise-Grade Security

Crestron Flex is an enterprise-grade solution, engineered in partnership with Microsoft to integrate seamlessly into any Microsoft Teams Rooms software deployment. Crestron Flex is ideally equipped for mass deployment throughout any sized corporate, university, medical, military, or government facility.

Easy Provisioning and Device Management

The XiO Cloud service is an IoT cloud based provisioning service (available separately) that enables installers and IT managers to deploy and manage thousands of devices easily. The XiO Cloud service allows for system alerts, network management and provisioning, and the pairing of a control device to the system's UC Engine. System updates are controlled by Windows software update.

Visit www.crestron.com/xiocloud for additional information.

Premium-Level Support

Crestron Flex Care is an optional subscription service that can be renewed annually for up to 5 years from the ship date. It includes 24/7 live remote technical support, an extended fiveyear warranty on Crestron® hardware, expedited advance replacements, and a discounted rate for on-site support.

Visit www.crestron.com/flexcare for detailed terms and conditions and additional information.

Dual Control Option

A TS- or TSW- 70 series 10.1 in. touch screen may be added to the solution as an additional control point for the Microsoft Teams Rooms environment.[2, 3]

Deployment Resources

View the Pre-Deployment Checklist on page 95 to help plan your Crestron Flex installation.

Notes:

1. Display must support "Wake on Sync" and "Sleep on No Sync" functionality. Consult the display manufacturer's specifications or internal settings of the specific display.
2. Room control capability (lighting, shades, thermostats, etc.) requires additional equipment and commissioning to be provided by a Crestron authorized integrator and/or programmer. Additional costs may apply.
3. Only one control device may be connected via direct connection method.

UC-BX30-T and UC-BX31-T Series Features

The UC-BX30-T and UC-BX31-T series advanced (with BYOD functionality) Crestron Flex tabletop front-of-room video conferencing system provides a small room video conference solution for use with Microsoft Teams® Rooms software. It supports single or dual video displays[1] (not included).

The government version, UC-BX30-T-GV, is a TAA-compliant conference solution suitable for government deployments.

UC-BX30-T / UC-BX30-T-GV



UC-BX30-T-WM



UC-BX31-T / UC-BX31-T-INDIA



UC-BX31-T-WM / UC-BX31-T-WM-INDIA



Included Components

	UC-BX30-T	UC-BX30-T-GV	UC-BX31-T(-INDIA)	UC-BX30-T-WM	UC-BX31-T-WM(-INDIA)
UC-SB1-CAM-FLEX	✓	✓	✗	✓	✗
UC-SB-P50 or UC-SB-P50-INDIA	✗	✗	✓	✗	✓
TS-1070-B-S-T-V	✓	✗	✓	✗	✗
TS-1070-GV-B-S	✗	✓	✗	✗	✗
TSW-1070-B-S-T-V	✗	✗	✗	✓	✓
UC-BRKT-250-P-T-ASSY or UC-BRKT-260-P-T-ASSY	✓	✓	✓	✓	✓

	UC-BX30-T	UC-BX30-T-GV	UC-BX31-T(-INDIA)	UC-BX30-T-WM	UC-BX31-T-WM(-INDIA)
UC-PR with Cable Organizer	✔	✔	✔	✔	✔
Cables	✔	✔	✔	✔	✔

To view the specifications and dimensions of the included components of the selected kit, refer to Specifications and Dimension Drawings.

Key Features

- Front-of-room video conferencing solution for a Microsoft Teams Rooms environment
- Native Microsoft Teams Rooms touch screen UI provides a consistent user experience with simple operation and one-touch meeting joins
- Optional integration with Crestron control systems
- Direct connection option between UC Engine and touch screen for simple installation and configuration
- Network management and provisioning, system alerts, and the pairing of the touch screen to the system's UC Engine through the XiO Cloud service
- Supports single or dual video displays (not included)
- Present, call, conference, and collaborate using your own device's UC conference platform (BYOD) or the native Microsoft Teams Rooms platform
- Easy to specify and install — no custom design, programming, or software installation required
- Enterprise-grade security — connects and communicates securely over any enterprise or SMB network
- Premium-level support with Crestron Flex Care (optional)

Native Microsoft Teams Rooms Experience

The conferencing solution brings the full Microsoft Teams Rooms UC experience to any meeting space in an enterprise or SMB facility.

Intuitive User Interface

With a large 10.1 in. (257 mm) capacitive touch screen display, the Crestron tabletop or wall mount touch scree provides superior conferencing control in meeting rooms, huddle spaces, and executive offices. The touch screen also offers optional control of room lighting, shades, thermostats, and other equipment.[2]

Using the bracket provided with the wall mount touch screen, the touch screen is easily installed over a 2-gang or 3-gang US electrical box, or a 2-gang European or UK electrical box. A security latch option is included to deter unauthorized removal of the touch screen.

Simplified Deployment

The UC Bracket Assembly provides preassembled components on one ready-to-mount bracket to simplify installation. The assembly can be mounted on a wall, or it can be attached to the rear of the display device. Crestron's direct connection method further simplifies installation with a single connection from the touch screen to the UC Bracket Assembly.[3]

High-Definition Video Conferencing with Impressive Audio

UC-SB1-CAM-FLEX: High-quality speakers, microphone, and digital signal processing deliver exceptional full-duplex speakerphone performance from the Crestron UC video conference soundbar and camera (UC-SB1-CAM-FLEX). The built-in conferencing camera captures the room in HD 1080p video resolution and with an ultra-wide 150° diagonal field of view.

UC-SB-P50 or UC-SB-P50-INDIA: High-quality speakers and microphones deliver exceptional full-duplex performance from the Jabra PanaCast 50 video bar for Crestron Flex systems (UC-SB-P50 or UC-SB-P50-INDIA). Three built-in conferencing cameras capture the room in panoramic 4K resolution with a seamless 180° horizontal field of view.

Visit jabra.com/panacast50 for more information on the Jabra PanaCast 50 video bar for Crestron Flex systems.

Crestron Control System Integration

The conferencing solution can integrate with a Crestron control system to enable touch screen control of room lighting, motorized window shades, climate control, AV, and other amenities.[2]

Bring Your Own Device

Conference room visitors can connect their laptop to the Crestron Flex system to use their own UC conference platform. The UC Presentation Transmitter (UC-PR) switches to the connected laptop's UC platform and returns to the native platform when disconnected.[4] For a list of BYOD tested devices on the UC-PR, refer to OLH Article 1000889.

Enterprise-Grade Security

Crestron Flex is an enterprise-grade solution, engineered in partnership with Microsoft to integrate seamlessly into any Microsoft Teams Rooms software deployment. Crestron Flex is ideally equipped for mass deployment throughout any sized corporate, university, medical, military, or government facility.

Easy Provisioning and Device Management

The XiO Cloud service is an IoT cloud based provisioning service (available separately) that enables installers and IT managers to deploy and manage thousands of devices easily. The XiO Cloud service allows for system alerts, network management and provisioning, and the pairing of a control device to the system's UC Engine. System updates are controlled by Windows software update.

Visit www.crestron.com/xiocloud for additional information.

Premium-Level Support

Crestron Flex Care is an optional subscription service that can be renewed annually for up to 5 years from the ship date. It includes 24/7 live remote technical support, an extended fiveyear warranty on Crestron® hardware, expedited advance replacements, and a discounted rate for on-site support.

Visit www.crestron.com/flexcare for detailed terms and conditions and additional information.

Dual Control Option

A TS- or TSW- 70 series 10.1 in. touch screen may be added to the solution as an additional control point for the Microsoft Teams Rooms environment.[2, 3]

Deployment Resources

View the Pre-Deployment Checklist on page 95 to help plan your Crestron Flex installation.

Notes:

1. Display must support "Wake on Sync" and "Sleep on No Sync" functionality. Consult the display manufacturer's specifications or internal settings of the specific display.
2. Room control capability (lighting, shades, thermostats, etc.) requires additional equipment and commissioning to be provided by a Crestron authorized integrator and/or programmer. Additional costs may apply.
3. Only one control device may be connected via direct connection method.
4. The UC-PR uses a USB-C 2.0 connection to provide content sharing, BYOD support, and charging for a user's device. Because USB-C supports multiple functions, device compatibility often varies. While some devices can accept power and data through the same USB-C connection, others cannot. The USB-C port on the UC-PR (labelled "USB") uses DisplayPort alternate mode for transporting video signals. Consult the connected device's user manual or manufacturer to ensure that the device supports DisplayPort alternate mode. Some devices that support DisplayPort alternate mode may not support device charging. For a list of tested devices, refer to OLH Article 1000889. USB-C transfer speeds may vary based on the connected device's processing speed, system configuration, the operating environment, and/or other factors. If the user's device does not support USB-C, then a combination of HDMI and USB B may be used for content sharing or BYOD functionality. For details, see Connections (UC-BX30-T and UC-BX31-T series).

UC-B70-A-T and UC-B70-A-T-I Features

The UC-B70-A-T Crestron Flex tabletop conferencing system provides a medium to large room video conference solution for use with Microsoft Teams® Rooms. It simplifies the communications and collaboration needs with fewer components and maximum efficiency. The UC-B70-A-T features a 10 in. tabletop touch screen, Crestron Videobar 70 with intelligent high-definition video and audio, a PoE injector, and cables. The UC-B70-A-T also supports up to two video displays[1] (not included).

The UC-B70-A-T conferencing solution delivers a hassle-free setup and installation, better space utilization, a cleaner and visually appealing environment, easy collaboration and content sharing, and scalable deployment.

UC-B70-A-T(-I)



Included Components

	UC-B70-A-T	UC-B70-A-T-I
UC-SB2-CAM-A-T	✔	✔
TS-1070-B-S-T-A	✔	✔
PoE Injector	✔	✔
Cables	✔	✔

To view the specifications and dimensions of the included components of the selected kit, refer to Specifications and Dimension Drawings.

Key Features

- Front-of-room video conferencing solution for a Microsoft Teams Rooms environment
- Intelligent high-definition video, immersive high-quality audio, built-in digital signal processer, and Microsoft Teams Rooms conferencing software, all in one Android™ OS-based Crestron Videobar 70 enclosure

- Native Microsoft Teams Rooms touch screen UI provides a consistent user experience with simple operation and one-touch meeting joins
- Easy to deploy and install — no custom design, programming, or software installation required
- Network management and provisioning and system alerts through the XiO Cloud service
- Enterprise-grade security - connects and communicates securely over any enterprise or SMB (Server Message Block) network
- Supports video displays (not included)

High-Definition Video Conferencing with Impressive Audio

The powerful and elegant all-in-one (AIO) Crestron Videobar 70 provides a convenient and compact conferencing solution for medium to large-sized meeting rooms. It comprises:

- A quad-camera setup that captures the full room in 4K, automatically tracks and frames the presenter or everyone in the room based on its configuration, and enhances the video content using AI.
- 10-watt dual speakers produce full, rich, and natural-sounding audio. Additional digital signal processing with AEC and noise reduction assures optimal sound quality for an immersive experience.
- Integrated 24-microphone array to capture voices throughout the room using adaptive beamforming technology. AI noise cancellation is also provided to ensure crystal-clear communication with exceptional audio fidelity and pickup.
- Android™ OS running on the QCS8250 chipset that ensures a smooth and reliable conferencing experience every time.

Native Microsoft Teams Rooms Experience

The conferencing solution brings the full Microsoft Teams Rooms UC experience to any meeting space in an enterprise or SMB facility.

Android™ OS-Based Conferencing System

As an Android OS-based conferencing system, the conferencing solution provides a consistent, secure Microsoft Teams® Rooms experience. The system's tabletop controller and Videobar 70 both run on Android OS to ensure compliance with enterprise requirements.

Intuitive User Interface

With a large 10 in. (254 mm) capacitive touch screen display, the Crestron tabletop touch screen provides superior conferencing control in meeting rooms, huddle spaces, and executive offices. The touch screen also offers optional control of room lighting, shades, thermostats, and other equipment.[2]

Simplified Deployment

The AIO Crestron Videobar 70 comes with one ready-to-mount wall bracket allowing the video bar to install cleanly beneath the display – connect the displays and touch screen and mount.

Enterprise-Grade Security

Crestron Flex is an enterprise-grade solution, engineered in partnership with Microsoft to integrate seamlessly into any Microsoft Teams Rooms software deployment. Crestron Flex is ideally equipped for mass deployment throughout any sized corporate, university, medical, military, or government facility.

Easy Provisioning and Device Management

The XiO Cloud service is an IoT cloud based provisioning service (available separately) that enables installers and IT managers to deploy and manage thousands of devices easily. The XiO Cloud service allows for system alerts, network management and provisioning, and the pairing of a control device to the system's UC Engine. System updates are controlled by Windows software update.

Visit www.crestron.com/xiocloud for additional information.

Premium-Level Support

Crestron Flex Care is an optional subscription service that can be renewed annually for up to 5 years from the ship date. It includes 24/7 live remote technical support, an extended fiveyear warranty on Crestron® hardware, expedited advance replacements, and a discounted rate for on-site support.

Visit www.crestron.com/flexcare for detailed terms and conditions and additional information.

Note:

1. Display must support "Wake on Sync" and "Sleep on No Sync" functionality. Consult the display manufacturer's specifications or internal settings of the specific display.

UC-MM30-T and UC-MMX30-T Series Features

The UC-MM30-T(-I) standard and UC-MMX30-T(-I) advanced (with BYOD functionality) series Crestron Flex tabletop conferencing system provides a small room video conference solution for use with Microsoft Teams® Rooms software. It supports single or dual video displays[1] (not included).

UC-MM30-T / UC-MM30-T-I



UC-MMX30-T / UC-MMX30-T-I



Included Components

	UC-MM30-T(-I)	UC-MMX30-T(-I)
UC-2-T-V	✓	✓
CCS-CAM-USB-F-400	✓	✓
UC-CAM-WMK	✓	✓
UC-BRKT-200-S-T-ASSY	✓	✗
UC-BRKT-250-P-T-ASSY or UC-BRKT-260-P-T-ASSY	✗	✓
UC-PR with Cable Organizer	✗	✓
Cables	✓	✓

To view the specifications and dimensions of the included components of the selected kit, refer to Specifications and Dimension Drawings.

Key Features

- Tabletop video conferencing solution for Microsoft Teams Rooms environment
- Native Microsoft Teams Rooms touch screen UI provides a consistent user experience with simple operation and one-touch meeting joins
- Optional integration with Crestron control systems
- Direct connection option between UC Engine and Crestron Flex tabletop conference device for simple installation and configuration
- Network management and provisioning, system alerts, and the pairing of the Crestron Flex tabletop conference device to the system's UC Engine through the XiO Cloud service

- Supports single or dual video displays (not included)
- With MMX30 series solutions — present, call, conference, and collaborate using your own device's UC conference platform (BYOD) or the native Microsoft Teams Rooms platform
- Easy to specify and install — no custom design, programming, or software installation required
- Enterprise-grade security — connects and communicates securely over any enterprise or SMB network
- Premium-level support with Crestron Flex Care (optional)

Native Microsoft Teams Rooms Experience

The conferencing solution brings the full Microsoft Teams Rooms UC experience to any meeting space in an enterprise or SMB facility.

Intuitive User Interface with Impressive Audio

With a large 7 in. HD color touch screen and an integrated AEC-enabled USB speakerphone that affords full-duplex wideband audio performance, the mini Crestron Flex Tabletop Conference device provides a superior conferencing and collaboration experience for meeting rooms, huddle spaces, and executive offices.

Simplified Deployment

The UC Bracket Assembly provides preassembled components on one ready-to-mount bracket to simplify installation. The assembly can be mounted on a wall, or it can be attached to the rear of the display device. Crestron's direct connection method further simplifies installation with a single connection from the touch screen to the UC Bracket Assembly.[3]

High-Definition Video Conferencing

The included collaboration camera (CCS-CAM-USB-F-400) features an ultra wide-angle 150° diagonal field of view to capture an entire conference room in Full HD 1080p video resolution. High precision aspherical optics, 12 MP CMOS sensor, and advanced video processing ensure a clear video image free from light or noise artifacts. Genius Framing digital autozoom detects the people in the room and frames them for an optimal view.

Crestron Control System Integration

The conferencing solution can integrate with a Crestron control system to enable touch screen control of room lighting, motorized window shades, climate control, AV, and other amenities.[2]

Bring Your Own Device (offered with MMX series solutions)

Conference room visitors can connect their laptop to the Crestron Flex system to use their own UC conference platform. The UC Presentation Transmitter (UC-PR) switches to the connected laptop's UC platform and returns to the native platform when disconnected.[4] For a list of BYOD tested devices on the UC-PR, refer to OLH Article 1000889.

Enterprise-Grade Security

Crestron Flex is an enterprise-grade solution, engineered in partnership with Microsoft to integrate seamlessly into any Microsoft Teams Rooms software deployment. Crestron Flex is ideally equipped for mass deployment throughout any sized corporate, university, medical, military, or government facility.

Easy Provisioning and Device Management

The XiO Cloud service is an IoT cloud based provisioning service (available separately) that enables installers and IT managers to deploy and manage thousands of devices easily. The XiO Cloud service allows for system alerts, network management and provisioning, and the pairing of a control device to the system's UC Engine. System updates are controlled by Windows software update.

Visit www.crestron.com/xiocloud for additional information.

Premium-Level Support

Crestron Flex Care is an optional subscription service that can be renewed annually for up to 5 years from the ship date. It includes 24/7 live remote technical support, an extended fiveyear warranty on Crestron® hardware, expedited advance replacements, and a discounted rate for on-site support.

Visit www.crestron.com/flexcare for detailed terms and conditions and additional information.

Dual Control Option

A TS- or TSW- 70 series 10.1 in. touch screen may be added to the solution as an additional control point for the Microsoft Teams Rooms environment.[2, 3]

Deployment Resources

View the Pre-Deployment Checklist on page 95 to help plan your Crestron Flex installation.

Notes:

1. Display must support "Wake on Sync" and "Sleep on No Sync" functionality. Consult the display manufacturer's specifications or internal settings of the specific display.
2. Room control capability (lighting, shades, thermostats, etc.) requires additional equipment and commissioning to be provided by a Crestron authorized integrator and/or programmer. Additional costs may apply.
3. Only one control device may be connected via direct connection method.
4. The UC-PR uses a USB-C 2.0 connection to provide content sharing, BYOD support, and charging for a user's device. Because USB-C supports multiple functions, device compatibility often varies. While some devices can accept power and data through the same USB-C connection, others cannot. The USB-C port on the UC-PR (labelled "USB") uses DisplayPort alternate mode for transporting video signals. Consult the connected device's user manual or manufacturer to ensure that the device supports DisplayPort alternate mode. Some devices that support DisplayPort alternate mode may not support device charging. For a list of tested devices, refer to OLH Article 1000889. USB-C transfer speeds may vary based on the connected device's processing speed, system configuration, the operating environment, and/or other factors. If the user's device does not support USB-C, then a combination of HDMI and USB B may be used for content sharing or BYOD functionality. For details, see Connections (UC-MMX30-T).

UC-MM30-NC-T and UC-MMX30-NC-T Series Features

The UC-MM30-NC-T(-I) standard and UC-MMX30-NC-T(-I) advanced (with BYOD functionality) series Crestron Flex tabletop conferencing system provides a small room conference solution for use with Microsoft Teams® Rooms software. It supports single or dual video displays[1] (not included).

UC-MM30-NC-T / UC-MM30-NC-T-I	UC-MMX30-NC-T / UC-MMX30-NC-T-I
	

Included Components

	UC-MM30-NC-T(-I)	UC-MMX30-NC-T(-I)
UC-2-T-V	✓	✓
UC-BRKT-200-S-T-ASSY	✓	✗
UC-BRKT-250-P-T-ASSY or UC-BRKT-260-P-T-ASSY	✗	✓
UC-PR with Cable Organizer	✗	✓
Cables	✓	✓

To view the specifications and dimensions of the included components of the selected kit, refer to Specifications and Dimension Drawings.

Key Features

- Tabletop conferencing solution for Microsoft Teams Rooms environment
- Native Microsoft Teams Rooms touch screen UI provides a consistent user experience with simple operation and one-touch meeting joins
- Optional integration with Crestron control systems
- Direct connection option between UC Engine and Crestron Flex tabletop conference device for simple installation and configuration
- Network management and provisioning, system alerts, and the pairing of the Crestron Flex tabletop conference device to the system's UC Engine through the XiO Cloud service
- Supports single or dual video displays (not included)
- With MMX30 series solutions — present, call, conference, and collaborate using your own device's UC conference platform (BYOD) or the native Microsoft Teams Rooms platform

- Easy to specify and install — no custom design, programming, or software installation required
- Enterprise-grade security — connects and communicates securely over any enterprise or SMB network
- Premium-level support with Crestron Flex Care (optional)

Native Microsoft Teams Rooms Experience

The conferencing solution brings the full Microsoft Teams Rooms UC experience to any meeting space in an enterprise or SMB facility.

Intuitive User Interface with Impressive Audio

With a large 7 in. HD color touch screen and an integrated AEC-enabled USB speakerphone that affords full-duplex wideband audio performance, the mini Crestron Flex Tabletop Conference device provides a superior conferencing and collaboration experience for meeting rooms, huddle spaces, and executive offices.

Simplified Deployment

The UC Bracket Assembly provides preassembled components on one ready-to-mount bracket to simplify installation. The assembly can be mounted on a wall, or it can be attached to the rear of the display device. Crestron's direct connection method further simplifies installation with a single connection from the touch screen to the UC Bracket Assembly.[3]

High-Definition Video Conferencing

High-definition video conferencing is supported by using the following Crestron 1 Beyond cameras: IV-CAM-P12-B, IV-CAM-P12-W, IV-CAM-P20-B, IV-CAM-P20-W, IV-CAM-I12-B, IV-CAM-I20-B, and IV-CAM-I20-W. Microsoft Teams certified third-party cameras are also compatible with the system.

Crestron Control System Integration

The conferencing solution can integrate with a Crestron control system to enable touch screen control of room lighting, motorized window shades, climate control, AV, and other amenities.[2]

Bring Your Own Device (offered with MMX series solutions)

Conference room visitors can connect their laptop to the Crestron Flex system to use their own UC conference platform. The UC Presentation Transmitter (UC-PR) switches to the connected laptop's UC platform and returns to the native platform when disconnected. For a list of BYOD tested devices on the UC-PR, refer to OLH Article 1000889.

Enterprise-Grade Security

Crestron Flex is an enterprise-grade solution, engineered in partnership with Microsoft to integrate seamlessly into any Microsoft Teams Rooms software deployment. Crestron Flex is ideally equipped for mass deployment throughout any sized corporate, university, medical, military, or government facility.

Easy Provisioning and Device Management

The XiO Cloud service is an IoT cloud based provisioning service (available separately) that enables installers and IT managers to deploy and manage thousands of devices easily. The XiO Cloud service allows for system alerts, network management and provisioning, and the pairing of a control device to the system's UC Engine. System updates are controlled by Windows software update.

Visit www.crestron.com/xiocloud for additional information.

Premium-Level Support

Crestron Flex Care is an optional subscription service that can be renewed annually for up to 5 years from the ship date. It includes 24/7 live remote technical support, an extended fiveyear warranty on Crestron® hardware, expedited advance replacements, and a discounted rate for on-site support.

Visit www.crestron.com/flexcare for detailed terms and conditions and additional information.

Dual Control Option

A TS- or TSW- 70 series 10.1 in. touch screen may be added to the solution as an additional control point for the Microsoft Teams Rooms environment.[2, 3]

Deployment Resources

View the Pre-Deployment Checklist on page 95 to help plan your Crestron Flex installation.

Notes:

1. Display must support "Wake on Sync" and "Sleep on No Sync" functionality. Consult the display manufacturer's specifications or internal settings of the specific display.
2. Room control capability (lighting, shades, thermostats, etc.) requires additional equipment and commissioning to be provided by a Crestron authorized integrator and/or programmer. Additional costs may apply.
3. Only one control device may be connected via direct connection method.
4. The UC-PR uses a USB-C 2.0 connection to provide content sharing, BYOD support, and charging for a user's device. Because USB-C supports multiple functions, device compatibility often varies. While some devices can accept power and data through the same USB-C connection, others cannot. The USB-C port on the UC-PR (labelled "USB") uses DisplayPort alternate mode for transporting video signals. Consult the connected device's user manual or manufacturer to ensure that the device supports DisplayPort alternate mode. Some devices that support DisplayPort alternate mode may not support device charging. For a list of tested devices, refer to OLH Article 1000889. USB-C transfer speeds may vary based on the connected device's processing speed, system configuration, the operating environment, and/or other factors. If the user's device does not support USB-C, then a combination of HDMI and USB B may be used for content sharing or BYOD functionality. For details, see Connections (UC-MMX30-T).

UC-C100-T and UC-CX100-T Series Features

The UC-C100-T standard and UC-CX100-T advanced (with BYOD functionality) series Crestron Flex integrator kit provides a customizable video conference solution for use with Microsoft Teams® Rooms software. It supports single or dual video displays[1] (not included).

The government versions, UC-C100-T-GV standard and UC-CX100-T-GV advanced, are TAA-compliant conference solutions suitable for government deployments.

UC-C100-T/UC-C100-T-GV



UC-C100-T-WM



UC-CX100-T/UC-CX100-T-GV



UC-CX100-T-WM



Included Components

	UC-C100-T	UC-C100-T-GV	UC-C100-T-WM	UC-CX100-T	UC-CX100-T-GV	UC-CX100-T-WM
TS-1070-B-S-T-V	✓	✗	✗	✓	✗	✗
TSW-1070-B-S-T-V	✗	✗	✓	✗	✗	✓
TS-1070-GV-B-S	✗	✓	✗	✗	✓	
UC-BRKT-200-S-T-ASSY	✓	✓	✓	✗	✗	✗
UC-BRKT-260-P-T-ASSY	✗	✗	✗	✓	✓	✓
UC-PR with Cable Organizer	✗	✗	✗	✓	✓	✓
PoE Injector	✓	✗	✓	✗	✗	✗
Cables	✓	✓	✓	✓	✓	✓

To view the specifications and dimensions of the included components of the selected kit, refer to Specifications and Dimension Drawings.

Key Features

- Conferencing integration solution for Microsoft Teams Rooms software
- Native Microsoft Teams Rooms touch screen UI provides a consistent user experience with simple operation and one-touch meeting joins
- Supports Shure® IntelliMix® Room DSP software (offered with UC-C100-T and UC-C100-T-WM)
- Optional integration with Crestron control systems
- Direct connection option between UC Engine and touch screen for simple installation and configuration
- Network management and provisioning, system alerts, and the pairing of the touch screen to the system's UC Engine through the XiO Cloud service
- Supports single or dual video displays (not included)
- With CX100 series solutions — Present, call, conference, and collaborate using your own device's UC conference platform (BYOD) or the native Microsoft Teams Rooms platform
- Enterprise-grade security — connects and communicates securely over any enterprise or SMB network
- Premium-level support with Crestron Flex Care (optional)

Native Microsoft Teams Rooms Experience

The conferencing solution brings the full Microsoft Teams Rooms UC experience to any meeting space in an enterprise or SMB facility.

Custom Room Integration

The conferencing solution provides the essential components needed to design a fully custom video conferencing space using your choice of display devices, cameras, speakers, microphones, and other AV equipment. Any Microsoft Teams software compliant USB camera and USB audio conferencing interface (or speakerphone) may be used.

Intuitive User Interface

With a large 10.1 in. (257 mm) capacitive touch screen display, the Crestron tabletop or wall mount touch scree provides superior conferencing control in meeting rooms, huddle spaces, and executive offices. The touch screen also offers optional control of room lighting, shades, thermostats, and other equipment.[2]

Using the bracket provided with the wall mount touch screen, the touch screen is easily installed over a 2-gang or 3-gang US electrical box, or a 2-gang European or UK electrical box. A security latch option is included to deter unauthorized removal of the touch screen.

Simplified Deployment

The UC Bracket Assembly provides preassembled components on one ready-to-mount bracket to simplify installation. The assembly can be mounted on a wall, or it can be attached to the rear of the display device. Crestron's direct connection method further simplifies installation with a single connection from the touch screen to the UC Bracket Assembly.[3]

Crestron Control System Integration

The conferencing solution can integrate with a Crestron control system to enable touch screen control of room lighting, motorized window shades, climate control, AV, and other amenities.[2]

Bring Your Own Device (offered with CX series solutions)

Conference room visitors can connect their laptop to the Crestron Flex system to use their own UC conference platform. The UC Presentation Transmitter (UC-PR) switches to the connected laptop's UC platform and returns to the native platform when disconnected.[4] For a list of BYOD tested devices on the UC-PR, refer to OLH Article 1000889.

Shure® IntelliMix® Room Integration (offered with UC-C100-T and UC-C100-T-WM)

The conferencing solution supports Shure IntelliMix Room[5] digital signal processing (DSP) software to enable integration with custom audio components such as networked microphones and power amplifiers.

IntelliMix Room integrates seamlessly with the conferencing solution and runs on the UC Engine as conferencing software with no additional hardware requirements.

Enterprise-Grade Security

Crestron Flex is an enterprise-grade solution, engineered in partnership with Microsoft to integrate seamlessly into any Microsoft Teams Rooms software deployment. Crestron Flex is ideally equipped for mass deployment throughout any sized corporate, university, medical, military, or government facility.

Easy Provisioning and Device Management

The XiO Cloud service is an IoT cloud based provisioning service (available separately) that enables installers and IT managers to deploy and manage thousands of devices easily. The XiO Cloud service allows for system alerts, network management and provisioning, and the pairing of a control device to the system's UC Engine. System updates are controlled by Windows software update.

Visit www.crestron.com/xiocloud for additional information.

Premium-Level Support

Crestron Flex Care is an optional subscription service that can be renewed annually for up to 5 years from the ship date. It includes 24/7 live remote technical support, an extended fiveyear warranty on Crestron® hardware, expedited advance replacements, and a discounted rate for on-site support.

Visit www.crestron.com/flexcare for detailed terms and conditions and additional information.

Dual Control Option

A TS- or TSW- 70 series 10.1 in. touch screen may be added to the solution as an additional control point for the Microsoft Teams Rooms environment.[2, 3]

Deployment Resources

View the Pre-Deployment Checklist on page 95 to help plan your Crestron Flex installation.

Notes:

1. Display must support "Wake on Sync" and "Sleep on No Sync" functionality. Consult the display manufacturer's specifications or internal settings of the specific display.
2. Room control capability (lighting, shades, thermostats, etc.) requires additional equipment and commissioning to be provided by a Crestron authorized integrator and/or programmer. Additional costs may apply.
3. A maximum of two touch screens or one touch screen and one Crestron Mercury device can be accommodated by the system. Only one control device may be connected via direct connection method.
4. The UC-PR uses a USB-C 2.0 connection to provide content sharing, BYOD support, and charging for a user's device. Because USB-C supports multiple functions, device compatibility often varies. While some devices can accept power and data through the same USB-C connection, others cannot. The USB-C port on the UC-PR (labelled "USB") uses DisplayPort alternate mode for transporting video signals. Consult the connected device's user manual or manufacturer to ensure that the device supports DisplayPort alternate mode. Some devices that support DisplayPort alternate mode may not support device charging. For a list of tested devices, refer to OLH Article 1000889. USB-C transfer speeds may vary based on the connected device's processing speed, system configuration, the operating environment, and/or other factors. If the user's device does not support USB-C, then a combination of HDMI and USB B may be used for content sharing or BYOD functionality. For details, see Connections (UC-CX100-T).
5. For detailed instructions on planning, deploying, and managing Shure IntelliMix Room, refer to Shure's documentation.

UC-M50-T and UC-MX50-T Features

The UC-M50-T standard and UC-MX50-T advanced (with BYOD functionality) Crestron Flex tabletop conferencing system provides a medium room video conference solution for use with Microsoft Teams® Rooms software. It supports single or dual video displays[1] (not included).

UC-M50-T



UC-MX50-T



Included Components

	UC-M50-T	UC-MX50-T
CCS-UC-1-T-V	✓	✗
CCS-UC-1-X-T-V	✗	✓
CCS-CAM-USB-F-400	✓	✓
UC-CAM-WMK	✓	✓
PW-2420RU	✓	✗
UC-BRKT-200-S-T-ASSY	✓	✗
UC-BRKT-250-P-T-ASSY or UC-BRKT-260-P-T-ASSY	✗	✓
Cables	✓	✓

To view the specifications and dimensions of the included components of the selected kit, refer to Specifications and Dimension Drawings.

Key Features

- Tabletop video conferencing solution for Microsoft Teams Rooms environment
- Native Microsoft Teams Rooms touch screen UI provides a consistent user experience with simple operation and one-touch meeting joins
- Optional integration with Crestron control systems
- Direct connection option between UC Engine and Crestron Flex tabletop conference device for simple installation and configuration
- Network management and provisioning, system alerts, and the pairing of the Crestron Flex tabletop conference device to the system's UC Engine through the XiO Cloud service
- Supports single or dual video displays (not included)

- With MX50 series solutions — present, call, conference, and collaborate using your own device's UC conference platform (BYOD) or the native Microsoft Teams Rooms platform
- Easy to specify and install — no custom design, programming, or software installation required
- Enterprise-grade security — connects and communicates securely over any enterprise or SMB network
- Premium-level support with Crestron Flex Care (optional)

Native Microsoft Teams Rooms Experience

The conferencing solution brings the full Microsoft Teams Rooms UC experience to any meeting space in an enterprise or SMB facility.

Intuitive User Interface with Impressive Audio

With a large 7 in. HD color touch screen and an integrated AEC-enabled USB speakerphone that affords full-duplex wideband audio performance, the Crestron Flex Tabletop Conference device provides a superior conferencing and collaboration experience for meeting rooms, huddle spaces, and executive offices. The conference device also offers optional control of room lighting, shades, thermostats, and other equipment.[2]

Simplified Deployment

The UC Bracket Assembly provides preassembled components on one ready-to-mount bracket to simplify installation. The assembly can be mounted on a wall, or it can be attached to the rear of the display device. Crestron's direct connection method further simplifies installation with a single connection from the touch screen to the UC Bracket Assembly.[3]

High-Definition Video Conferencing

The included collaboration camera (CCS-CAM-USB-F-400) features an ultra wide-angle 150° diagonal field of view to capture an entire conference room in Full HD 1080p video resolution. High precision aspherical optics, 12 MP CMOS sensor, and advanced video processing ensure a clear video image free from light or noise artifacts. Genius Framing digital autozoom detects the people in the room and frames them for an optimal view.

Crestron Control System Integration

The conferencing solution can integrate with a Crestron control system to enable touch screen control of room lighting, motorized window shades, climate control, AV, and other amenities.[2]

Bring Your Own Device (offered with MX series solutions)

Conference room visitors can connect their laptop to the Crestron Flex system to use their own UC conference platform. The system's built-in content ingest device switches to the connected laptop's UC platform and returns to the native platform when disconnected.

Enterprise-Grade Security

Crestron Flex is an enterprise-grade solution, engineered in partnership with Microsoft to integrate seamlessly into any Microsoft Teams Rooms software deployment. Crestron Flex is ideally equipped for mass deployment throughout any sized corporate, university, medical, military, or government facility.

Easy Provisioning and Device Management

The XiO Cloud service is an IoT cloud based provisioning service (available separately) that enables installers and IT managers to deploy and manage thousands of devices easily. The XiO Cloud service allows for system alerts, network management and provisioning, and the pairing of a control device to the system's UC Engine. System updates are controlled by Windows software update.

Visit www.crestron.com/xiocloud for additional information.

Premium-Level Support

Crestron Flex Care is an optional subscription service that can be renewed annually for up to 5 years from the ship date. It includes 24/7 live remote technical support, an extended fiveyear warranty on Crestron® hardware, expedited advance replacements, and a discounted rate for on-site support.

Visit www.crestron.com/flexcare for detailed terms and conditions and additional information.

Dual Control Option

A TS- or TSW- 70 series 10.1 in. touch screen may be added to the solution as an additional control point for the Microsoft Teams Rooms environment.[2, 3]

Deployment Resources

View the Pre-Deployment Checklist on page 95 to help plan your Crestron Flex installation.

Note:

1. Display must support "Wake on Sync" and "Sleep on No Sync" functionality. Consult the display manufacturer's specifications or internal settings of the specific display.
2. Room control capability (lighting, shades, thermostats, etc.) requires additional equipment and commissioning to be provided by a Crestron authorized integrator and/or programmer. Additional costs may apply.
3. A maximum of two touch screens or one touch screen and one Crestron Mercury device can be accommodated by the system. Only one control device may be connected via direct connection method.

UC-M50-NC-T and UC-MX50-NC-T Features

The UC-M50-NC-T standard and UC-MX50-NC-T advanced (with BYOD functionality) Crestron Flex tabletop conferencing system provides a medium room conference solution for use with Microsoft Teams® Rooms software. It supports single or dual video displays[1] (not included).

UC-M50-NC-T



UC-MX50-NC-T



Included Components

	UC-M50-NC-T	UC-MX50-NC-T
CCS-UC-1-T-V	✓	✗
CCS-UC-1-X-T-V	✗	✓
PW-2420RU	✓	✗
UC-BRKT-200-S-T-ASSY	✓	✗
UC-BRKT-250-P-T-ASSY or UC-BRKT-260-P-T-ASSY	✗	✓
Cables	✓	✓

To view the specifications and dimensions of the included components of the selected kit, refer to Specifications and Dimension Drawings.

Key Features

- Tabletop conferencing solution for Microsoft Teams Rooms environment
- Native Microsoft Teams Rooms touch screen UI provides a consistent user experience with simple operation and one-touch meeting joins
- Optional integration with Crestron control systems
- Direct connection option between UC Engine and Crestron Flex tabletop conference device for simple installation and configuration
- Network management and provisioning, system alerts, and the pairing of the Crestron Flex tabletop conference device to the system's UC Engine through the XiO Cloud service
- Supports single or dual video displays (not included)

- With MX50 series solutions — present, call, conference, and collaborate using your own device's UC conference platform (BYOD) or the native Microsoft Teams Rooms platform
- Easy to specify and install — no custom design, programming, or software installation required
- Enterprise-grade security — connects and communicates securely over any enterprise or SMB network
- Premium-level support with Crestron Flex Care (optional)

Native Microsoft Teams Rooms Experience

The conferencing solution brings the full Microsoft Teams Rooms UC experience to any meeting space in an enterprise or SMB facility.

Intuitive User Interface with Impressive Audio

With a large 7 in. HD color touch screen and an integrated AEC-enabled USB speakerphone that affords full-duplex wideband audio performance, the Crestron Flex Tabletop Conference device provides a superior conferencing and collaboration experience for meeting rooms, huddle spaces, and executive offices. The conference device also offers optional control of room lighting, shades, thermostats, and other equipment.[2]

Simplified Deployment

The UC Bracket Assembly provides preassembled components on one ready-to-mount bracket to simplify installation. The assembly can be mounted on a wall, or it can be attached to the rear of the display device. Crestron's direct connection method further simplifies installation with a single connection from the touch screen to the UC Bracket Assembly.[3]

High-Definition Video Conferencing

High-definition video conferencing is supported by using the following Crestron 1 Beyond cameras: IV-CAM-P12-B, IV-CAM-P12-W, IV-CAM-P20-B, IV-CAM-P20-W, IV-CAM-I12-B, IV-CAM-I20-B, and IV-CAM-I20-W. Microsoft Teams certified third-party cameras are also compatible with the system.

Crestron Control System Integration

The conferencing solution can integrate with a Crestron control system to enable touch screen control of room lighting, motorized window shades, climate control, AV, and other amenities.[2]

Bring Your Own Device (offered with MX series solutions)

Conference room visitors can connect their laptop to the Crestron Flex system to use their own UC conference platform. The system's built-in content ingest device switches to the connected laptop's UC platform and returns to the native platform when disconnected.

Enterprise-Grade Security

Crestron Flex is an enterprise-grade solution, engineered in partnership with Microsoft to integrate seamlessly into any Microsoft Teams Rooms software deployment. Crestron Flex is ideally equipped for mass deployment throughout any sized corporate, university, medical, military, or government facility.

Easy Provisioning and Device Management

The XiO Cloud service is an IoT cloud based provisioning service (available separately) that enables installers and IT managers to deploy and manage thousands of devices easily. The XiO Cloud service allows for system alerts, network management and provisioning, and the pairing of a control device to the system's UC Engine. System updates are controlled by Windows software update.

Visit www.crestron.com/xiocloud for additional information.

Premium-Level Support

Crestron Flex Care is an optional subscription service that can be renewed annually for up to 5 years from the ship date. It includes 24/7 live remote technical support, an extended fiveyear warranty on Crestron® hardware, expedited advance replacements, and a discounted rate for on-site support.

Visit www.crestron.com/flexcare for detailed terms and conditions and additional information.

Dual Control Option

A TS- or TSW- 70 series 10.1 in. touch screen may be added to the solution as an additional control point for the Microsoft Teams Rooms environment.[2, 3]

Deployment Resources

View the Pre-Deployment Checklist on page 95 to help plan your Crestron Flex installation.

Note:

1. Display must support "Wake on Sync" and "Sleep on No Sync" functionality. Consult the display manufacturer's specifications or internal settings of the specific display.
2. Room control capability (lighting, shades, thermostats, etc.) requires additional equipment and commissioning to be provided by a Crestron authorized integrator and/or programmer. Additional costs may apply.
3. A maximum of two touch screens or one touch screen and one Crestron Mercury device can be accommodated by the system. Only one control device may be connected via direct connection method.

UC-M70-T and UC-MX70-T Features

The UC-M70-T standard and UC-MX70-T advanced (with BYOD functionality) Crestron Flex advanced tabletop conferencing system provides a large room video conference solution for use with Microsoft Teams® Rooms software. It supports single or dual video displays[1] (not included).

UC-M70-T



UC-MX70-T



Included Components

	UC-M70-T	UC-MX70-T
CCS-UC-1-T-V	✓	✗
CCS-UC-1-X-T-V	✗	✓
UC-CAM-L1	✓	✓
CCS-UCA-MIC	✓	✓
PW-2420RU	✓	✗
UC-BRKT-200-S-T-ASSY	✓	✗
UC-BRKT-250-P-T-ASSY or UC-BRKT-260-P-T-ASSY	✗	✓
Cables	✓	✓

To view the specifications and dimensions of the included components of the selected kit, refer to Specifications and Dimension Drawings.

Key Features

- Tabletop video conferencing solution for Microsoft Teams Rooms environment
- Native Microsoft Teams Rooms touch screen UI provides a consistent user experience with simple operation and one-touch meeting joins
- Optional integration with Crestron control systems
- Direct connection option between UC Engine and Crestron Flex tabletop conference device for simple installation and configuration
- Network management and provisioning, system alerts, and the pairing of the Crestron Flex tabletop conference device to the system's UC Engine through the XiO Cloud service

- Supports single or dual video displays (not included)
- With MX70 series solutions — present, call, conference, and collaborate using your own device's UC conference platform (BYOD) or the native Microsoft Teams Rooms platform
- Easy to specify and install — no custom design, programming, or software installation required
- Enterprise-grade security — connects and communicates securely over any enterprise or SMB network
- Premium-level support with Crestron Flex Care (optional)

Native Microsoft Teams Rooms Experience

The conferencing solution brings the full Microsoft Teams Rooms UC experience to any meeting space in an enterprise or SMB facility.

Intuitive User Interface with Impressive Audio

With a large 7 in. HD color touch screen and an integrated AEC-enabled USB speakerphone that affords full-duplex wideband audio performance, the Crestron Flex Tabletop Conference device provides a superior conferencing and collaboration experience for meeting rooms, huddle spaces, and executive offices. The conference device also offers optional control of room lighting, shades, thermostats, and other equipment.[2]

Simplified Deployment

The UC Bracket Assembly provides preassembled components on one ready-to-mount bracket to simplify installation. The assembly can be mounted on a wall, or it can be attached to the rear of the display device. Crestron's direct connection method further simplifies installation with a single connection from the touch screen to the UC Bracket Assembly.[3]

High-Definition Video Conferencing

The included AI collaboration camera (UC-CAM-L1)[4] features a wide-angle 103° diagonal field of view to capture an entire conference room in Full HD 1080p video resolution. High precision aspherical optics, 20.30 MP CMOS sensor, and advanced video processing ensure a clear video image free from light or noise artifacts. Genius Framing digital autozoom intelligently detects the people in the room and frames them for an optimal view.

Crestron Control System Integration

The conferencing solution can integrate with a Crestron control system to enable touch screen control of room lighting, motorized window shades, climate control, AV, and other amenities.[2]

Bring Your Own Device (offered with MX series solutions)

Conference room visitors can connect their laptop to the Crestron Flex system to use their own UC conference platform. The system's built-in content ingest device switches to the connected laptop's UC platform and returns to the native platform when disconnected.

Enterprise-Grade Security

Crestron Flex is an enterprise-grade solution, engineered in partnership with Microsoft to integrate seamlessly into any Microsoft Teams Rooms software deployment. Crestron Flex is ideally equipped for mass deployment throughout any sized corporate, university, medical, military, or government facility.

Easy Provisioning and Device Management

The XiO Cloud service is an IoT cloud based provisioning service (available separately) that enables installers and IT managers to deploy and manage thousands of devices easily. The XiO Cloud service allows for system alerts, network management and provisioning, and the pairing of a control device to the system's UC Engine. System updates are controlled by Windows software update.

Visit www.crestron.com/xiocloud for additional information.

Premium-Level Support

Crestron Flex Care is an optional subscription service that can be renewed annually for up to 5 years from the ship date. It includes 24/7 live remote technical support, an extended fiveyear warranty on Crestron® hardware, expedited advance replacements, and a discounted rate for on-site support.

Visit www.crestron.com/flexcare for detailed terms and conditions and additional information.

Dual Control Option

A TS- or TSW- 70 series 10.1 in. touch screen may be added to the solution as an additional control point for the Microsoft Teams Rooms environment.[2, 3]

Deployment Resources

View the Pre-Deployment Checklist on page 95 to help plan your Crestron Flex installation.

Notes:

1. Display must support "Wake on Sync" and "Sleep on No Sync" functionality. Consult the display manufacturer's specifications or internal settings of the specific display.
2. Room control capability (lighting, shades, thermostats, etc.) requires additional equipment and commissioning to be provided by a Crestron authorized integrator and/or programmer. Additional costs may apply.
3. A maximum of two touch screens or one touch screen and one Crestron Mercury device can be accommodated by the system. Only one control device may be connected via direct connection method.
4. Applicable for UC-MX70-T: The UC-CAM-L1 with network adapter requires driver installation on the connected laptop. A USB plug-and-play adapter, UC-CAMA-ADPT-ENET-USB, can be purchased separately to avoid driver installation.

UC-M70-NC-T and UC-MX70-NC-T Features

The UC-M70-NC-T standard and UC-MX70-NC-T advanced (with BYOD functionality) Crestron Flex advanced tabletop conferencing system provides a large room video conference solution for use with Microsoft Teams® Rooms software. It supports single or dual video displays[1] (not included).

UC-M70-NC-T



UC-MX70-NC-T



Included Components

	UC-M70-NC-T	UC-MX70-NC-T
CCS-UC-1-T-V	✓	✗
CCS-UC-1-X-T-V	✗	✓
CCS-UCA-MIC	✓	✓
PW-2420RU	✓	✗
UC-BRKT-200-S-T-ASSY	✓	✗
UC-BRKT-250-P-T-ASSY or UC-BRKT-260-P-T-ASSY	✗	✓
Cables	✓	✓

To view the specifications and dimensions of the included components of the selected kit, refer to Specifications and Dimension Drawings.

Key Features

- Supports single or dual video displays (not included)
- With MX70 series solutions — present, call, conference, and collaborate using your own device's UC conference platform (BYOD) or the native Microsoft Teams Rooms platform
- Enterprise-grade security — connects and communicates securely over any enterprise or SMB network
- Premium-level support with Crestron Flex Care (optional)

Native Microsoft Teams Rooms Experience

The conferencing solution brings the full Microsoft Teams Rooms UC experience to any meeting space in an enterprise or SMB facility.

Intuitive User Interface with Impressive Audio

With a large 7 in. HD color touch screen and an integrated AEC-enabled USB speakerphone that affords full-duplex wideband audio performance, the Crestron Flex Tabletop Conference device provides a superior conferencing and collaboration experience for meeting rooms, huddle spaces, and executive offices. The conference device also offers optional control of room lighting, shades, thermostats, and other equipment.[2]

Simplified Deployment

The UC Bracket Assembly provides preassembled components on one ready-to-mount bracket to simplify installation. The assembly can be mounted on a wall, or it can be attached to the rear of the display device. Crestron's direct connection method further simplifies installation with a single connection from the touch screen to the UC Bracket Assembly.[3]

High-Definition Video Conferencing

High-definition video conferencing is supported by using the following Crestron 1 Beyond cameras: IV-CAM-P12-B, IV-CAM-P12-W, IV-CAM-P20-B, IV-CAM-P20-W, IV-CAM-I12-B, IV-CAM-I20-B, and IV-CAM-I20-W. Microsoft Teams certified third-party cameras are also compatible with the system.

Crestron Control System Integration

The conferencing solution can integrate with a Crestron control system to enable touch screen control of room lighting, motorized window shades, climate control, AV, and other amenities.[2]

Bring Your Own Device (offered with MX series solutions)

Conference room visitors can connect their laptop to the Crestron Flex system to use their own UC conference platform. The system's built-in content ingest device switches to the connected laptop's UC platform and returns to the native platform when disconnected.

Enterprise-Grade Security

Crestron Flex is an enterprise-grade solution, engineered in partnership with Microsoft to integrate seamlessly into any Microsoft Teams Rooms software deployment. Crestron Flex is ideally equipped for mass deployment throughout any sized corporate, university, medical, military, or government facility.

Easy Provisioning and Device Management

The XiO Cloud service is an IoT cloud based provisioning service (available separately) that enables installers and IT managers to deploy and manage thousands of devices easily. The XiO Cloud service allows for system alerts, network management and provisioning, and the pairing of a control device to the system's UC Engine. System updates are controlled by Windows software update.

Visit www.crestron.com/xiocloud for additional information.

Premium-Level Support

Crestron Flex Care is an optional subscription service that can be renewed annually for up to 5 years from the ship date. It includes 24/7 live remote technical support, an extended fiveyear warranty on Crestron® hardware, expedited advance replacements, and a discounted rate for on-site support.

Visit www.crestron.com/flexcare for detailed terms and conditions and additional information.

Dual Control Option

A TS- or TSW- 70 series 10.1 in. touch screen may be added to the solution as an additional control point for the Microsoft Teams Rooms environment.[2, 3]

Deployment Resources

View the Pre-Deployment Checklist on page 95 to help plan your Crestron Flex installation.

Notes:

1. Display must support "Wake on Sync" and "Sleep on No Sync" functionality. Consult the display manufacturer's specifications or internal settings of the specific display.
2. Room control capability (lighting, shades, thermostats, etc.) requires additional equipment and commissioning to be provided by a Crestron authorized integrator and/or programmer. Additional costs may apply.
3. A maximum of two touch screens or one touch screen and one Crestron Mercury device can be accommodated by the system. Only one control device may be connected via direct connection method.

UC-ENGINE-BRKT-T-UPGRD and UC-ENGINE-BRKTX-T-UPGRD Features

The UC-ENGINE-BRKT-T-UPGRD standard and UC-ENGINE-BRKTX-T-UPGRD solution provides all of the necessary components to upgrade a deployed Crestron Flex tabletop conference device and camera to a complete video conference system for use with the Microsoft Teams Rooms intelligent communications platform. It supports single or dual video displays[1] (not included).

UC-ENGINE-BRKT-T-UPGRD

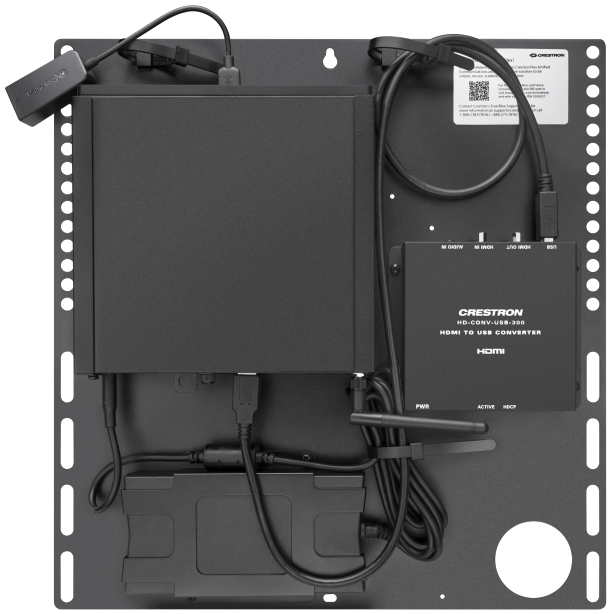

UC-ENGINE-BRKTX-T-UPGRD



Included Components

	UC-ENGINE-BRKT-T-UPGRD	UC-ENGINE-BRKTX-T-UPGRD
UC-BRKT-200-S-T-ASSY	✔	✘
UC-BRKT-250-P-T-ASSY or UC-BRKT-260-P-T-ASSY	✘	✔
Cables	✔	✔

To view the specifications and dimensions of the included components of the selected kit, refer to Specifications and Dimension Drawings.

Key Features

- Upgrades a single Crestron Flex tabletop conference device to a complete video conference system

- Native Microsoft Teams Rooms touch screen UI provides a consistent user experience with simple operation and one-touch meeting joins
- Optional integration with Crestron control systems
- Direct connection option between UC Engine and Crestron Flex tabletop conference device for simple installation and configuration
- Network management and provisioning, system alerts, and the pairing of the Crestron Flex tabletop conference device to the system's UC Engine through the XiO Cloud service
- Supports single or dual video displays
- With UC-ENGINE-BRKTX-T-UPGRD upgrade solution — present, call, conference, and collaborate using your own device's UC conference platform (BYOD) or the native Microsoft Teams Rooms platform
- Easy to specify and install — no custom design, programming, or software installation required
- Enterprise-grade security — connects and communicates securely over any enterprise or SMB network
- Premium-level support with Crestron Flex Care (optional)

Native Microsoft Teams Rooms Experience

The conferencing solution brings the full Microsoft Teams Rooms UC experience to any meeting space in an enterprise or SMB facility.

Bring Your Own Device (offered with UC-ENGINE-BRKTX-T-UPGRD solutions)

Conference room visitors can connect their laptop to the Crestron Flex system to use their own UC conference platform. The system's built-in content ingest device switches to the connected laptop's UC platform and returns to the native platform when disconnected.

Simplified Deployment

The UC Bracket Assembly provides preassembled components on one ready-to-mount bracket to simplify installation. The assembly can be mounted on a wall, or it can be attached to the rear of the display device. Crestron's direct connection method further simplifies installation with a single connection from the touch screen to the UC Bracket Assembly.[3]

Crestron Control System Integration

The conferencing solution can integrate with a Crestron control system to enable touch screen control of room lighting, motorized window shades, climate control, AV, and other amenities.[2]

Enterprise-Grade Security

Crestron Flex is an enterprise-grade solution, engineered in partnership with Microsoft to integrate seamlessly into any Microsoft Teams Rooms software deployment. Crestron Flex is ideally equipped for mass deployment throughout any sized corporate, university, medical, military, or government facility.

Easy Provisioning and Device Management

The XiO Cloud service is an IoT cloud based provisioning service (available separately) that enables installers and IT managers to deploy and manage thousands of devices easily. The XiO Cloud service allows for system alerts, network management and provisioning, and the pairing of a control device to the system's UC Engine. System updates are controlled by Windows software update.

Visit www.crestron.com/xiocloud for additional information.

Premium-Level Support

Crestron Flex Care is an optional subscription service that can be renewed annually for up to 5 years from the ship date. It includes 24/7 live remote technical support, an extended fiveyear warranty on Crestron® hardware, expedited advance replacements, and a discounted rate for on-site support.

Visit www.crestron.com/flexcare for detailed terms and conditions and additional information.

Dual Control Option

A TS- or TSW- 70 series 10.1 in. touch screen may be added to the solution as an additional control point for the Microsoft Teams Rooms environment.[2, 3]

Deployment Resources

View the Pre-Deployment Checklist on page 95 to help plan your Crestron Flex installation.

Notes:

1. Display must support "Wake on Sync" and "Sleep on No Sync" functionality. Consult the display manufacturer's specifications or internal settings of the specific display.
2. A maximum of two touch screens or one touch screen and one Crestron Mercury device can be accommodated by the system. Only one control device may be connected via direct connection method.
3. Room control capability (lighting, shades, thermostats, etc.) requires additional equipment and commissioning to be provided by a Crestron authorized integrator and/or programmer. Additional costs may apply.

Specifications and Dimension Drawings

Refer to the following sections for more information regarding the specifications and dimensions of the following devices.

Tabletop Conferencing Device Specifications

Device name: CCS-UC-1-T-V / CCS-UC-1-X-T-V

Touch Screen	7 in. (178 mm) diagonal capacitive multi-touch TFT active matrix color LCD, 1280 x 800 pixels
UI	Microsoft Teams Rooms UI plus optional Crestron room control UI
Mic Mute Symbol and Light Bar	(2) Capacitive buttons with bi-color LEDs, either button toggles between mute and unmute
AEC	Limes Audio TrueVoice® acoustic echo cancellation, automatic mic mixing, automatic gain control, and dynamic noise reduction, full-duplex IEEE 1329 Type 1 compliant
Speaker	Full range speaker; Amplifier Power: 11 W; 95 dB SPL at 0.5 m maximum output; Frequency Response: 90 Hz to 22 kHz
Microphones	360° quad mic array; Pickup Range (typical): 20 ft (6 m)
Extension Microphones	Supports two mic pods, model CCS-UCA-MIC (sold separately)
Occupancy Sensor	6 ft (1.83 m) PIR range in front of touch screen
Ethernet (CCS-UC-1-TV)	100 Mbps, auto-switching, auto-negotiating, auto-discovery, full/half duplex, DHCP, TCP/IP, UDP/IP, CIP, SSL, TLS, SSH, SFTP (SSH File Transfer Protocol), SRTP, IEEE 802.1X, Active Directory authentication, digest access authentication, password login, XiO Cloud client, Microsoft Intune® client, IEEE 802.3at Type 2 PoE+ compliant
Ethernet (CCS-UC-1-X-T-V)	100 Mbps, auto-switching, autonegotiating, autodiscovery, full/half duplex, DHCP, TCP/IP, UDP/IP, CIP, SSL, TLS, SSH, SFTP (SSH File Transfer Protocol), SRTP, IEEE 802.1X, Active Directory authentication, digest access authentication, password login, XiO Cloud service, Microsoft Intune® client
USB	USB 2.0 micro Type B device port, supports UAC for audio interface to UC Engine (cable included)
Power Options (CCS-UC-1-TV)	PoE+: IEEE 802.3at Type 2, Class 4 (25.5 W) PoE+ Powered Device **NOTE:** If the additional mic pod (CCS-UCA-MIC) is used, PoE+ cannot be used to power the device. 24VDC: 24VDC via external 100-240VAC, 50/60 Hz power pack, model PW-2420RU
Power (CCS-UC-1-X-T-V)	24VDC via external 100-240VAC, 50/60 Hz power pack, model PW-2420RU **NOTE:** The CCS-UC-1-X cannot be powered by Power over Ethernet or PoE+.
Dimensions	Height: 4.11 in. (104 mm) Width: 8.92 in. (227 mm) Depth: 12.74 in. (324 mm)
Weight	5.5 lb (2.5 kg)

Tabletop Conferencing Device Dimension Drawing

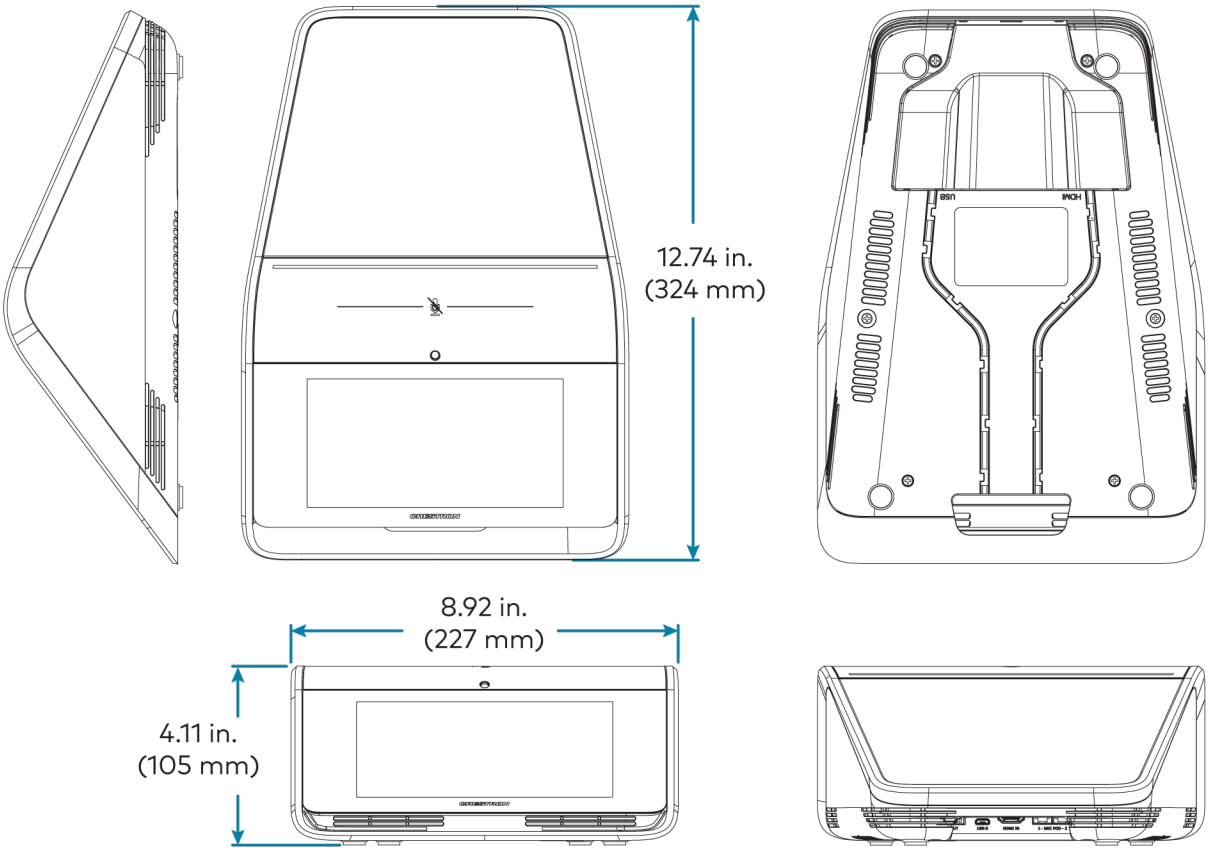

Mini Tabletop Conferencing Device Specifications

Device name: UC-2 / UC-2-T-V

Touch Screen	7 in. (178 mm) diagonal capacitive multi-touch TFT active matrix color LCD, 1280 x 800 pixels
UI (UC-2)	Microsoft Teams Audio UI
UI (UC-2-T-V)	Microsoft Teams UI
Mic Mute Symbol and Light Bar	(4) Capacitive buttons with bi-color LEDs, toggles between mute and unmute
AEC	Automatic gain control, dynamic noise reduction, acoustic echo cancellation, full-duplex IEEE 1329 Type 1 compliant
Speaker	Full range speaker; Amplifier Power: 7 W (rated power); Output Volume: 83 ±3 dBA @1m 1 kHz; Frequency Response: 100 Hz - 20 kHz
Microphones	(4) Built-in omnidirectional, digital MEMS microphones with 360° audio pickup; Maximum pickup range: 10 ft (3 m) typical
Occupancy Sensor	Approx. 10 ft (3 m) PIR range in front of touch screen
Ethernet	100 Mbps, auto-switching, auto-negotiating, auto-discovery, full/half duplex, DHCP, TCP/IP, UDP/IP, CIP, SSL, TLS, SSH, SFTP (SSH File Transfer Protocol), SRTP, IEEE 802.1X, Active Directory® authentication, digest access authentication, password login, XiO Cloud client, Microsoft Intune® client, IEEE 802.3at Type 2 PoE+ compliant
USB	USB 2.0 micro Type B device port, supports UAC for audio interface to UC Engine (cable included)
Power	IEEE 802.3af Class 3 and 802.3at Class 4 PoE+ powered device; PoE+ injector included
Dimensions	Height: 3.02 in. (77 mm) Width: 7.17 in. (182 mm) Depth: 9.61 in. (244 mm)
Weight	2.1 lb (0.96 kg)

Mini Tabletop Conferencing Device Dimension Drawing

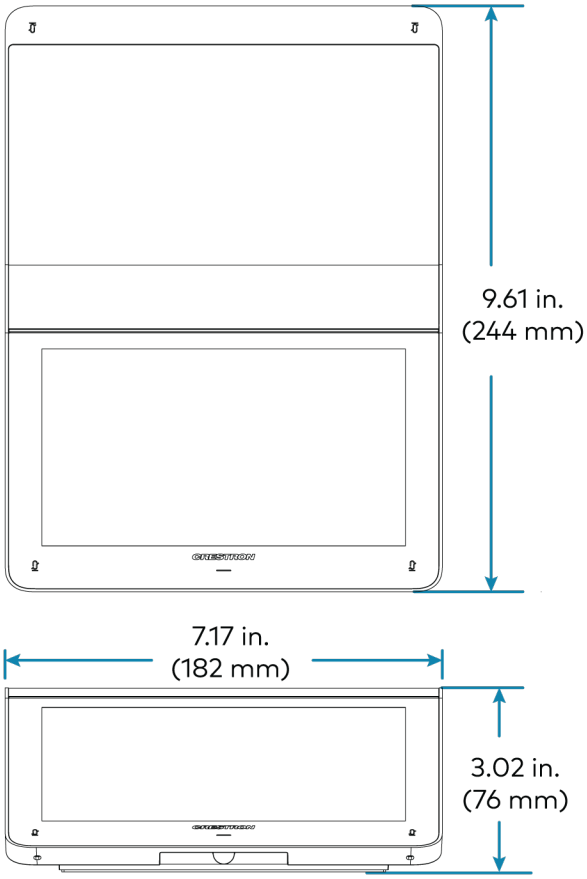

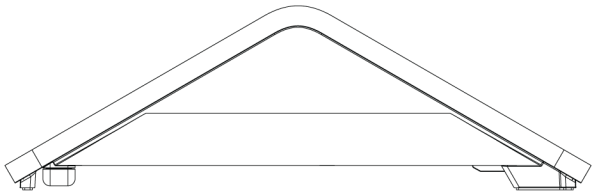

Tabletop and Wall Mount Touch Screen Specifications

Device name: TS-1070-GV-B-S / TS-1070-B-S-T-V / TSW-1070-B-S-T-V

Touch Screen	10.1 in. (257 mm) diagonal capacitive multi-touch TFT active matrix color LCD, 1920 x 1200 pixels
UI	Microsoft Teams UI plus optional Crestron Smart Graphics® room control UI
Ethernet	100/1000 Mbps, auto switching, auto negotiating, auto discovery, full/half duplex, TCP/IP, UDP/IP, CIP, DHCP, SSL, TLS, SSH, SFTP (SSH File Transfer Protocol), IEEE 802.1X, SNMP, IPv4 or IPv6, Active Directory® service authentication, HTTPS web browser setup, XiO Cloud® client, IEEE 802.3at compliant
Power over Ethernet	IEEE 802.3at Type 2 compliant PoE+ PD (Powered Device); Normally requests 15 W from an 802.3at Type 2 PSE with LLDP advanced power management; With room scheduling and USB enabled, requests 18 W from an 802.3at Type 2 PSE with LLDP; Requests 30 W (PoE+ Class 4) from an 802.3at Type 2 PSE without LLDP; Requests 15.4 W (PoE Class 0) from an 802.3af (or 802.3at Type 1) PSE
Power	Powered via PoE passthrough on the UC-PR
Construction	Plastic, smooth black finish, edge-to-edge glass with black surround
Dimensions (TS-1070-B-S-T-V)	Height: 5.29 in. (134 mm) Width: 9.63 in. (245 mm) Depth: 4.67 in. (119 mm)
Dimensions (TSW-1070-B-S-T-V)	Height: 5.87 in. (149 mm) Width: 9.46 in. (240 mm) Depth: 2.01 in. (51 mm) Dimensions do not include mounting bracket or add-on accessories
Weight (TS-1070-B-S-T-V)	2.44 lb (1105 g)
Weight (TSW-1070-B-S-T-V)	1.61 lb (730 g)

Tabletop Touch Screen Dimension Drawing

TS-1070-GV-B-S / TS-1070-B-S-T-V

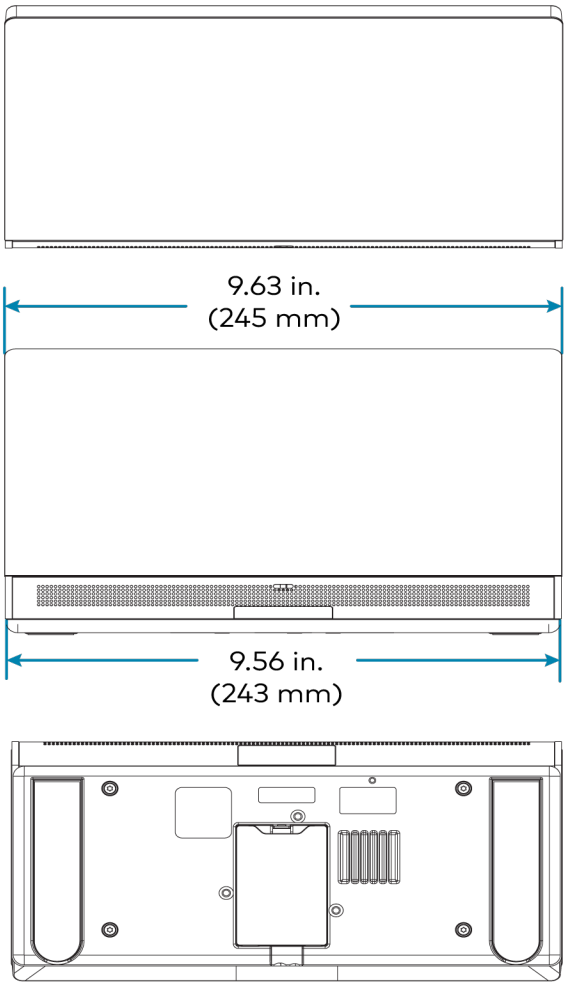

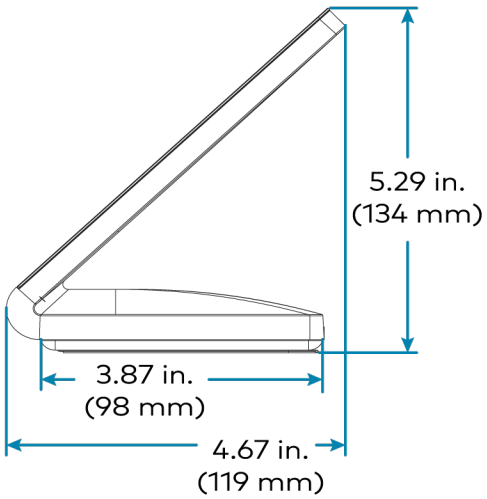

Wall Mount Touch Screen Dimension Drawing

TSW-1070-B-S-T-V

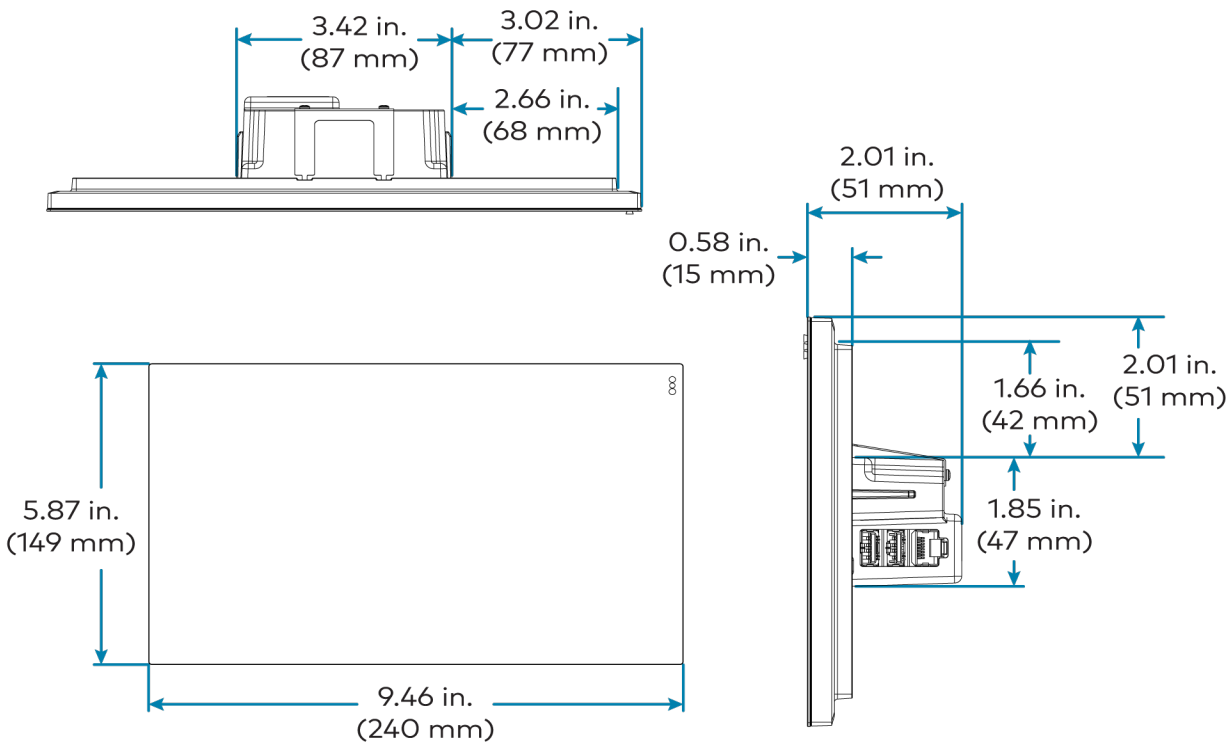

Wall Mount Touch Screen Bracket Dimension Drawing

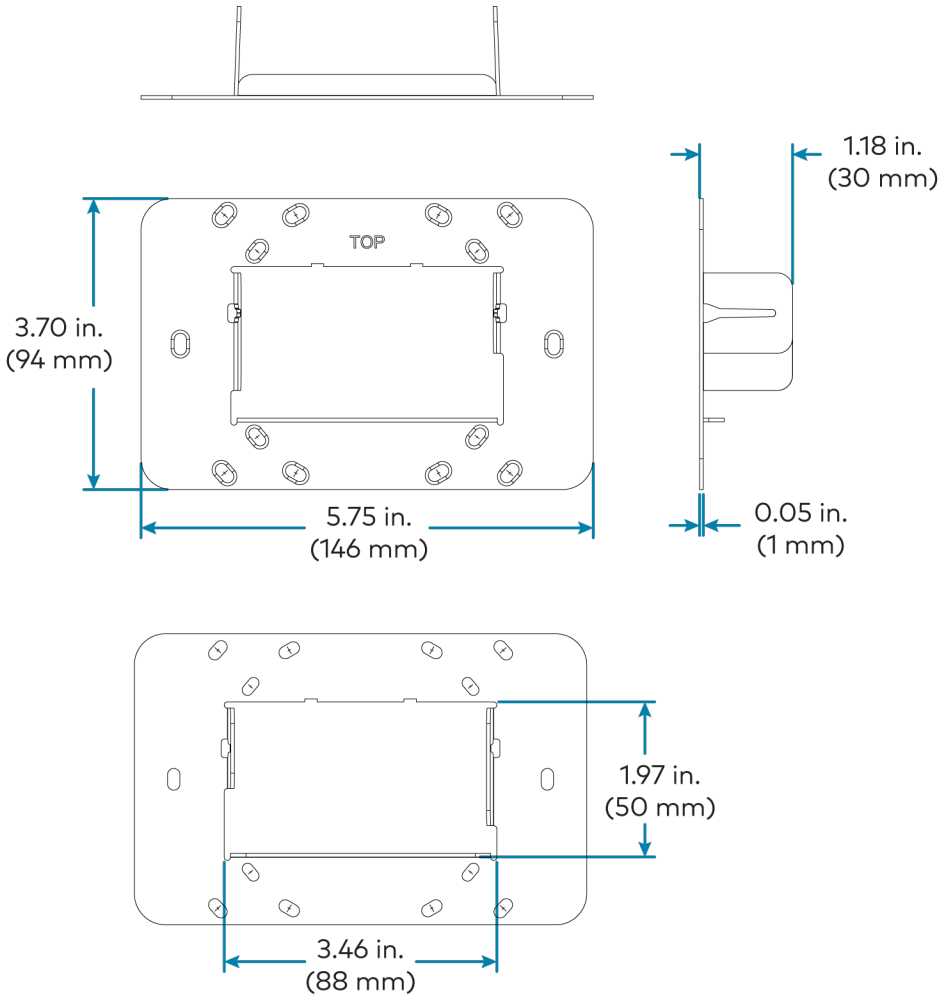

Crestron Videobar 70 Specifications

Speakers	(2) Dual 10-watt speakers, stereo;
Microphone	24 MIC linear array

> **NOTE:** Microphone pickup range may vary in rooms with highly reflective infrastructure (e.g., glass walls, metal furniture, open ceilings, etc.) or above average ambient noise.

Audio DSP	Acoustic echo cancellation, dereverberation, automatic gain control, dynamic noise suppression, adaptive beamforming, speaker volume control, speaker EQ and limiting (fixed);
Quad Camera Configuration	(1) Main camera; (1) Left and (1) right sub camera; (1) Center sub camera with 14° overlap
Main Camera Optics	Main camera 20 Megapixels 1 in. sensor
Camera Field of View	Main Camera: 84.2° horizontal, 53.5° vertical; Left and right sub camera: 41° horizontal, 21° vertical; Center sub camera: 41° horizontal, 21° vertical
Camera Resolution	Main Camera: 5472 x 3072; Left and right sub camera: 2976 x 1944; Center sub camera: 3648 x 1944
Autozoom	8.5x digital zoom
Camera Shutter	Mechanical, electronically controlled
Operating System	Android OS running on the QCS8250 chipset
Memory	LPDDR5 12GB; UFS 128GB
Connectivity	100/1000 Mbps Ethernet connectivity
Wi-Fi® Connectivity	Dual Band Simultaneous Wi-Fi 6 2x2 80 MHz
Bluetooth® Connectivity	Bluetooth 5.2
UC Client	Microsoft Teams® Rooms
Management Client	XiO Cloud Service
Content Ingest	HDMI input on Crestron Videobar 70 or direct sharing
Display Output	Up to three displays support
Display Output Resolution	(2) 4K and (1) 1080p
Video Input Signal Types	HDMI
Video Output Signal Types	HDMI
Video Content Protection	HDCP 1.4 and HDCP 2.2
Audio Input Signal Types	HDMI: Two-channel LPCM

Connectors	HDMI port: (2) HDMI In (Input 2 reserved for future use), (3) HDMI Out (Output 3 reserved for future use); 3.5 mm Line in / Line out: (1) Audio In, (reserved for future use) (1) Audio Out (reserved for future use); LAN: (2) 8-pin RJ-45 connector; USB A: (2) USB 3.0 Type A connector (reserved for future use); USB C: (2) USB 3.1 Type-C connector (reserved for future use)
Input Power	19VDC via external 100-240VAC, 50/60 Hz power pack (included)
Temperature	32° to 104°F (0° to 40°C)
Enclosure	Plastic, smooth black finish; Speaker and camera housing, rear air vents, integrated mounting bracket
LED Indicators	Green indicates microphones are unmuted; Red indicates microphones are muted
Mounting	Wall mount using integrated mounting bracket
Dimensions	Height: 4.33 in. (110 mm); 6.38 in. (162 mm) with bracket; Length: 38.58 in. (980 mm) Depth: 3.77 in. (96 mm); 4 in. (101 mm) with bracket
Weight	13.2 lb (6 kg)

Crestron Videobar 70 Dimension Drawing

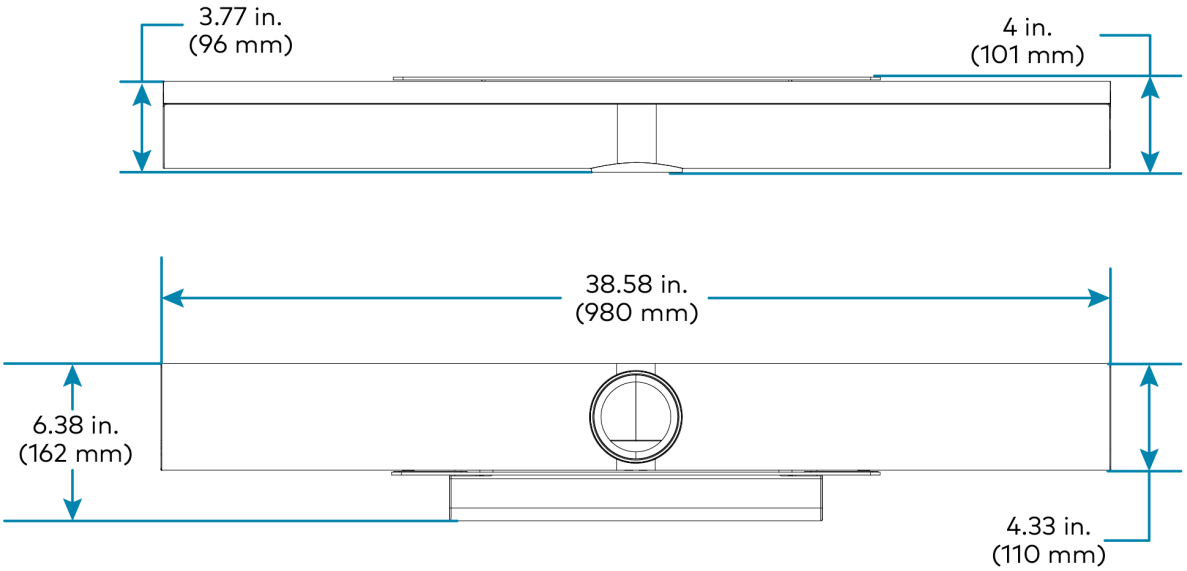

Smart Soundbar and Camera Specifications

UC-SB1-CAM-FLEX

Speakers	Stereo 2-way, 20 W per channel; 3 in. (76 mm) woofers; 3 x 4-3/8 in. (76 x 112 mm) passive radiators; 1 in. (25 mm) dome tweeters; 80 Hz to 20 kHz (±3 dB) frequency response; 91 dB SPL @ 1 m output level (both channels driven at full power)
Microphone	Linear quad-element far-field adaptive beamforming microphone array; 15 ft (4.6 m) pickup range, 180° horizontal and 180° vertical pickup angle; 20 Hz to 8 kHz frequency response

NOTE: Microphone pickup range may vary in rooms with highly reflective infrastructure (e.g., glass walls, metal furniture, open ceilings, etc.) or above average ambient noise.

Audio DSP	Acoustic echo cancellation, dereverberation, automatic gain control, dynamic noise suppression, adaptive beamforming, speaker volume control, speaker EQ and limiting (fixed); Full-duplex IEEE 1329 Type 1 compliant
Camera Optics	12 Megapixel 1/2.3 CMOS sensor, ultra wide angle six element aspherical glass lens, f/2.8 aperture
Camera Field of View	150° diagonal, 120° horizontal, 90° vertical
Autozoom	Genius Framing automatic lossless digital zoom intelligently frames around people in the room
Camera Noise Reduction	3D noise reduction, bias compensating spatio-temporal filtering, wide area chroma filtering, flicker elimination
Camera Scaling	Real-time scaling, dewarping, and perspective correction
Camera Resolution	HD 1080p @ 30 fps
Analog Audio Input	2-Channel stereo via 3.5 mm TRS mini-phone jack, fixed level (bypasses DSP), 1 Vrms maximum per channel for full rated output, for in-room amplification of an external audio source
Analog Audio Output	2-Channel stereo via 3.5 mm TRS mini-phone jack, fixed level, 1 Vrms maximum, feeds amplified audio content to an assistive listening system
Status Bar	Multi-segment RGBY LED zero-center mutually-diverging linear bargraph
Main Power	24VDC via external 100-240VAC, 50/60 Hz power pack, model PW-2420RU (included)
Enclosure	Lightly textured gunmetal black finish, plastic housing, perforated stainless steel grilles, die-cast aluminum rear cover, integral steel hinged mounting bracket
Mounting	Freestanding or surface wall mount at ear/face level (adhesive feet included, mounting bracket attached)
Dimensions	Height: 4.57 in. (116 mm), 4.64 in. (118 mm) with feet Width: 43.60 in. (1107 mm) Depth: 3.90 in. (99 mm)
Weight	13.56 lb (6.2 kg)

UC-SB1-CAM-FLEX Dimension Drawing

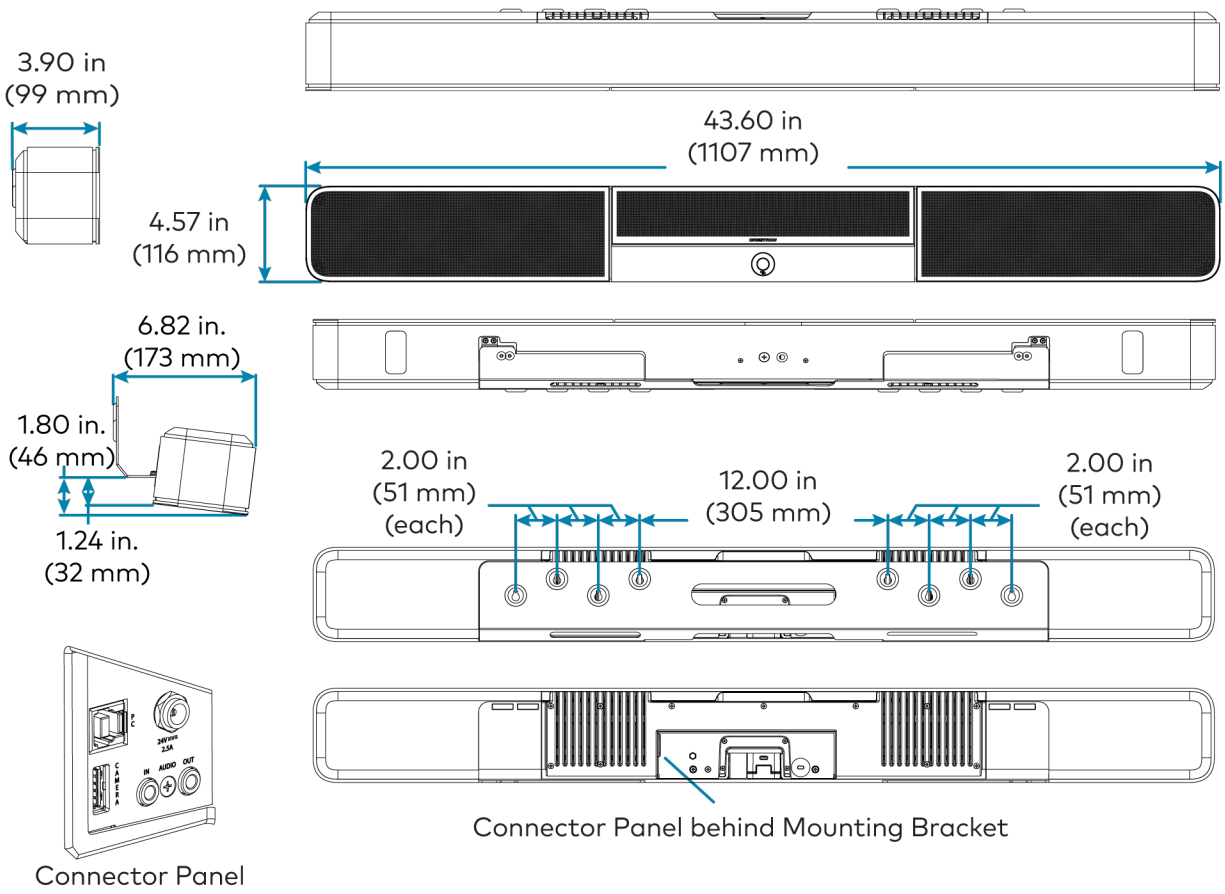

UC-SB-P50 or UC-SB-P50-INDIA

Speakers	(4) speakers, stereo; 2 in. (50 mm) woofers; 2 x 3/4 in. (50 x 20 mm) tweeters; 80 Hz to 20 kHz frequency response; Automatic speaker detection
Microphone	(8) microphone beamforming array; -37 dBFS microphone sensitivity; 100 Hz to 8 kHz microphone frequency range; Suitable for rooms up to 15 x 15 ft (4.5 x 4.5 m)

NOTE: Microphone pickup range may vary in rooms with highly reflective infrastructure (e.g., glass walls, metal furniture, open ceilings, etc.) or above average ambient noise.

Camera Optics	(3) cameras; 13 Megapixels
Camera Field of View	180° horizontal, 54° vertical
Autozoom	Automatic digital zoom dynamically frames people within 11 ft (3.5 m)
Camera Resolution	3840 x 1080 @ 30 fps
Power	From external power pack; Input: 100-240VAC, 50/60 Hz; Output: 5A @ 12V
Enclosure	Black speaker and camera housing, rear air vents, integrated adjustable mounting bracket
Mounting	Wall mount using integrated mounting bracket; Optional table mount or VESA® compliant screen mount (both sold separately)
Dimensions	Height: 3.1 in. (90 mm) Width: 25.60 in. (650 mm) Depth: 4.90 in. (125 mm)
Weight	4.85 lb (2.2 kg)

For more information on the Jabra PanaCast 50 video bar for Crestron Flex systems, refer to jabra.com/panacast50.

Camera Specifications

CCS-CAM-USB-F-400

Image Sensor	12 Megapixel 1/2.3 CMOS sensor
Lens	High precision, ultra wide angle, six element aspherical glass lens
Field of View	150° diagonal, 120° horizontal, 90° vertical
Aperture	f/2.8
Autozoom	Genius Framing automatic lossless digital zoom intelligently frames around people in the room
Connectivity	Plug-and-play USB 3.1
Resolution/FPS	HD 1080p @ 30 fps
Dimensions	Height: 1.40 in. (36 mm) Width: 1.60 in. (41 mm) Depth: 2.82 in. (72 mm)
Weight	4.2 oz (120 g)

UC-CAM-L1

Image Sensor	20.30 Megapixels 1 in. CMOS Sensor
Lens	High precision, wide angle, aspherical glass lens
Field of View	103° diagonal, 92° horizontal, 65° vertical
Aperture	f/2.9
Autozoom	Genius Framing automatic lossless digital zoom intelligently frames around people in the room
Connectivity	USB 3.0 port (via USB to PoE Adapter)
Power	5VDC power adapter
Resolution/FPS	HD 1080p @ 30 fps
Dimensions	Height: 2.1 in. (53 mm) Width: 4.8 in. (122 mm) Depth: 3.5 in. (89 mm)
Weight	1.3 lb (0.6 kg)

UC Engine Bracket Assembly Specifications

Device name: UC-BRKT-200-S-T-ASSY / UC-BRKT-250-P-T-ASSY / UC-BRKT-260-P-T-ASSY

UC Engine	Mini PC, Intel Core® processor with Windows® 10 IoT Edition OS and 100/1000 Mbps Ethernet connectivity
UC Client	Microsoft Teams Rooms
Management Client	XiO Cloud Service
Content Ingest	HDMI input via HDMI to USB 3.0 converter (UC-BRKT-200-S-T-ASSY)
Content Ingest	HDMI input via CAT5 to USB 3.0 converter (UC-BRKT-250-P-T-ASSY or UC-BRKT-260-P-T-ASSY)

> **NOTE:** Use only DigitalMedia™ Ultra cable between the conference and content ingest devices (UC-BRKT-250-P-T-ASSY). The maximum supported cable length is 300 ft.

Display Output	Single or dual displays support
Display Output Resolution	1080p
Power (UC-BRKT-200-S-T-ASSY)	130 W via external 100-240VAC, 50/60 Hz adapter (included)
Power (UC-BRKT-250-P-T-ASSY / UC-BRKT-260-P-T-ASSY)	UC Engine: 100-240VAC, 50/60 Hz adapter (included); Content ingest device: 24VDC via external 100-240VAC, 50/60 Hz power pack (included)
Construction	Metal mounting bracket, black, preassembled with UC Engine and content ingest device
Mounting	Surface wall mount behind the display device, or attach to the rear of the display device via the bolts attaching the display to a VESA® compliant display mount; Bracket includes mounting holes on both side edges, spaced 100, 200, and 300 mm vertically, to allow for attachment to either side of the display mounting plate
Dimensions	Maximum Height: 15.00 in. (381 mm) Maximum Width: 14.50 in. (368 mm) Maximum Depth: 1.93 in. (49 mm)
Maximum Weight	8.0 lb (3.7 kg)

UC Engine Bracket Assembly Dimension Drawing

UC-BRKT-200-S-T-ASSY

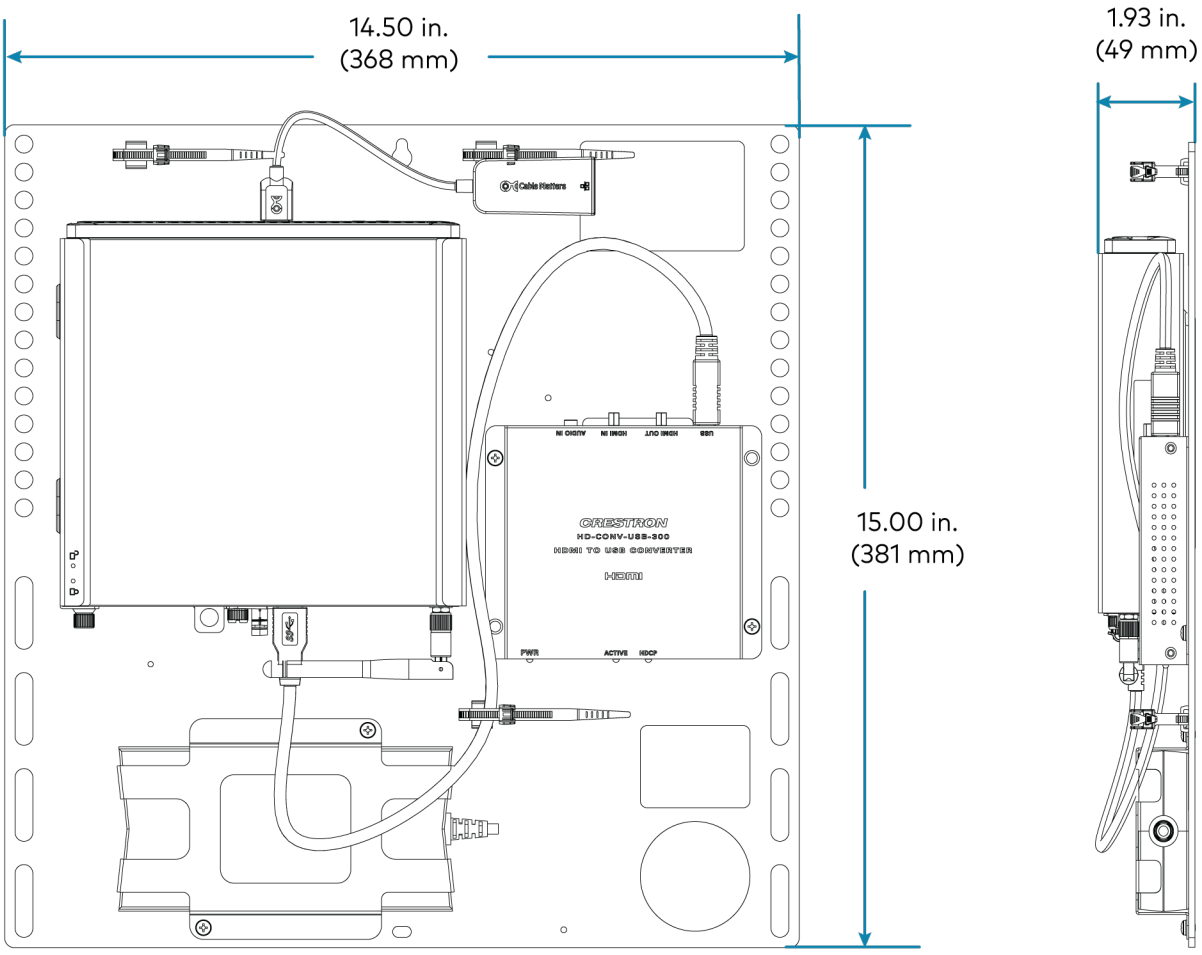

UC-BRKT-250-P-T-ASSY

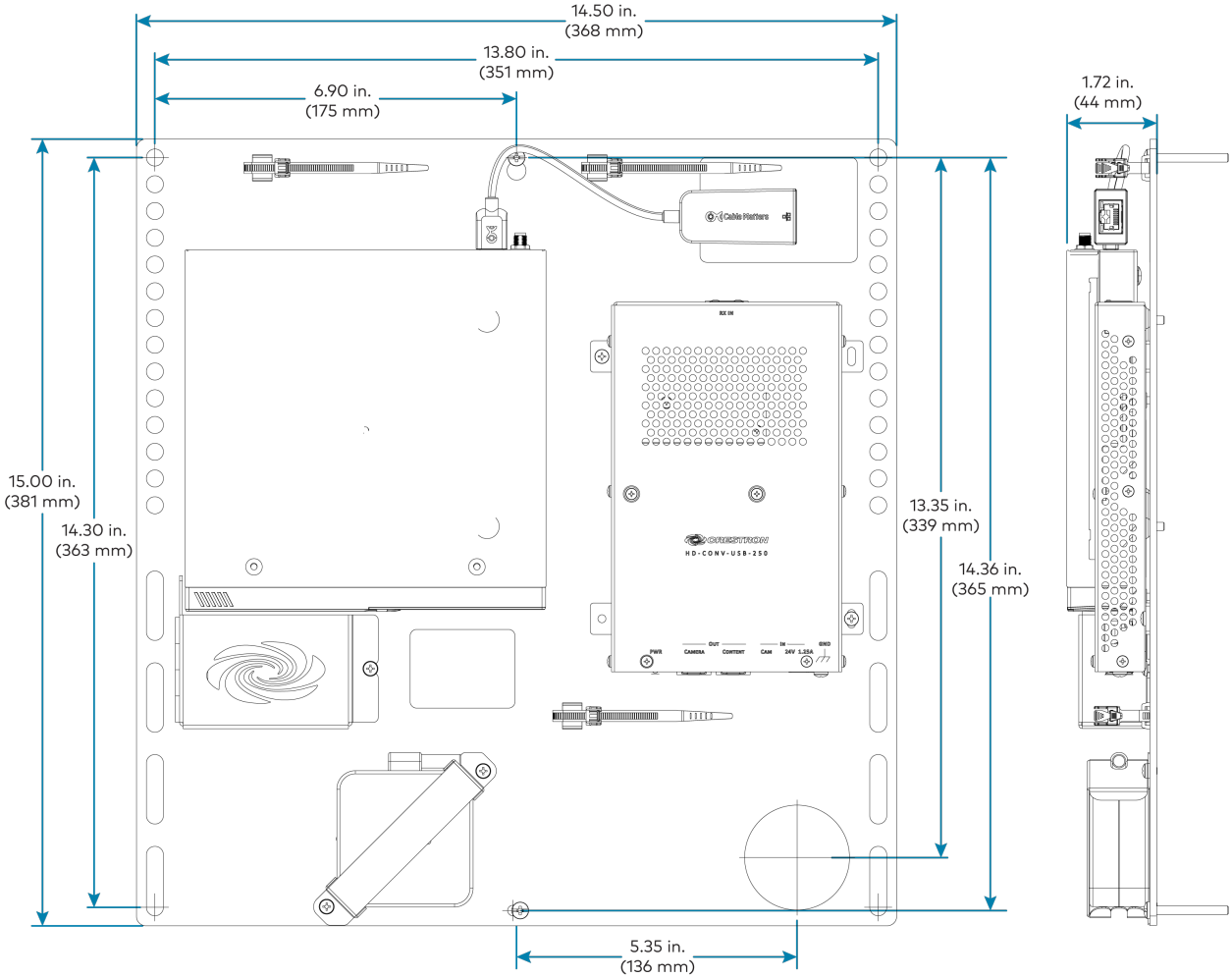

UC-BRKT-260-P-T-ASSY

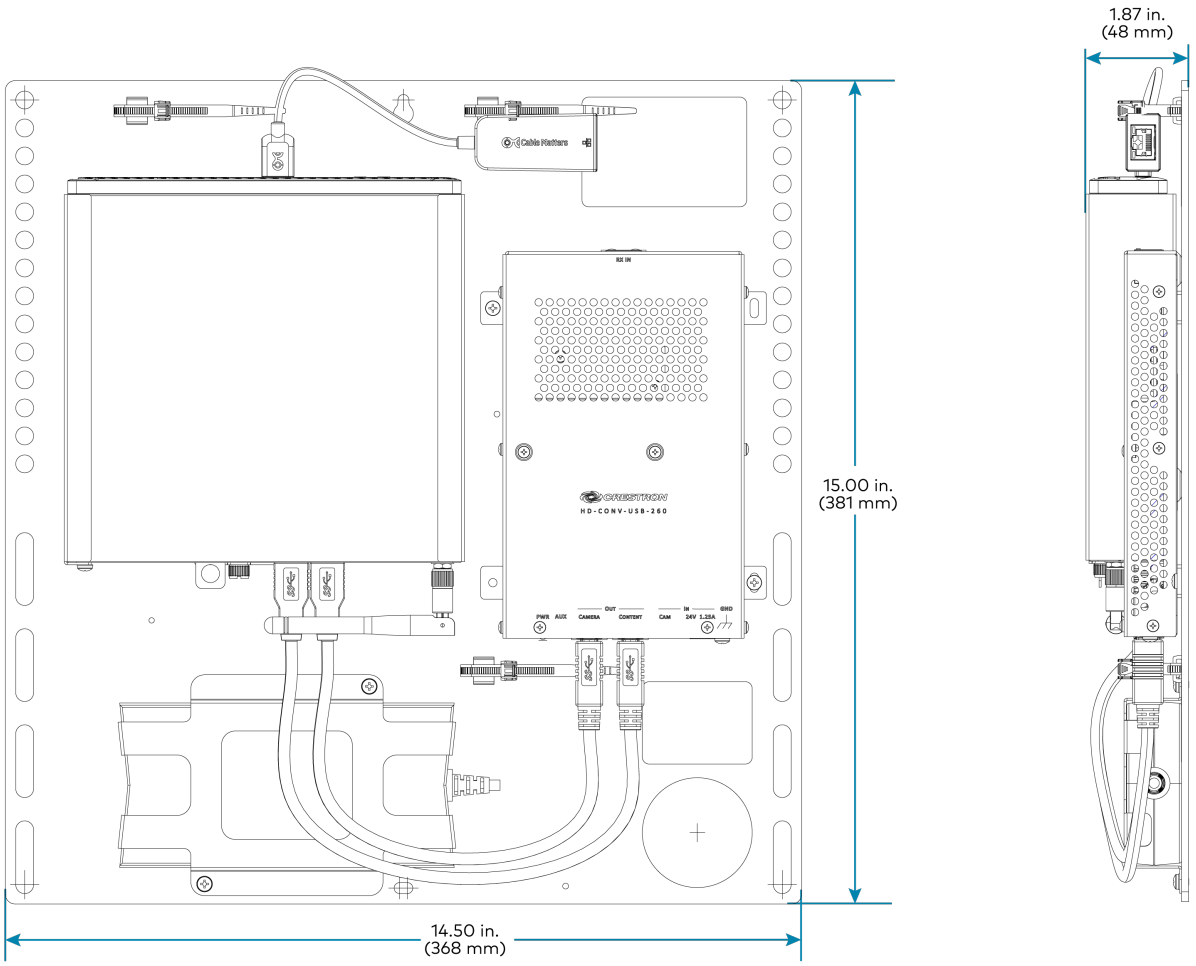

UC Presentation Transmitter Specifications

Video Input Signal Types	HDMI, DisplayPort™ 1.2 via USB-C® port
Video Output Signal Types	HDMI over CAT5
Resolution	1080p
Video Content Protection	HDCP 1.4 and HDCP 2.2
Audio Input Signal Types	HDMI, DisplayPort 1.2 via USB-C port
Audio Output Signal Types	HDMI over CAT5
Communications	Ethernet: 100 Mbps, auto-switching, auto negotiating, auto-discovery HDMI over CAT5: HDCP, Ethernet HDMI: HDCP USB: USB 2.0 and USB 3.0
Connectors	LAN PoE: (1) 8-pin RJ-45 connector; ACC: (1) USB 3.0 Type B connector; For firmware loading only; USB A: (1) USB 2.0 Type A connector; USB B: (1) USB 2.0 Type B connector; USB: (1) USB 2.0 Type-C connector; HDMI IN: (1) HDMI Type A; To RX: (1) 8-pin RJ-45 connector; Power Jack: (1) DC power connector; LAN: (1) 8-pin RJ-45 connector; Ground: (1) 6-32 screw
Indicators	PWR: (1) Green LED, indicates operating power supplied via power supply Ethernet: (2) LEDs on To RX port; Green indicates Ethernet link status; Amber indicates Ethernet activity
Power Supply	24VDC, 6A, 100-240VAC
Device Charging	Up to 60 W charging for devices connected via USB-C port
Construction	Metal, black finish, integral mounting flanges; Vented top, front, bottom, and sides
Mounting	Surface mount for mounting under table; Attaches to a single rack rail
Dimensions	Height: 1.58 in. (40 mm) Width: 9.25 in. (235 mm) Depth: 8.20 in. (208 mm)

UC Presentation Transmitter Dimension Drawing

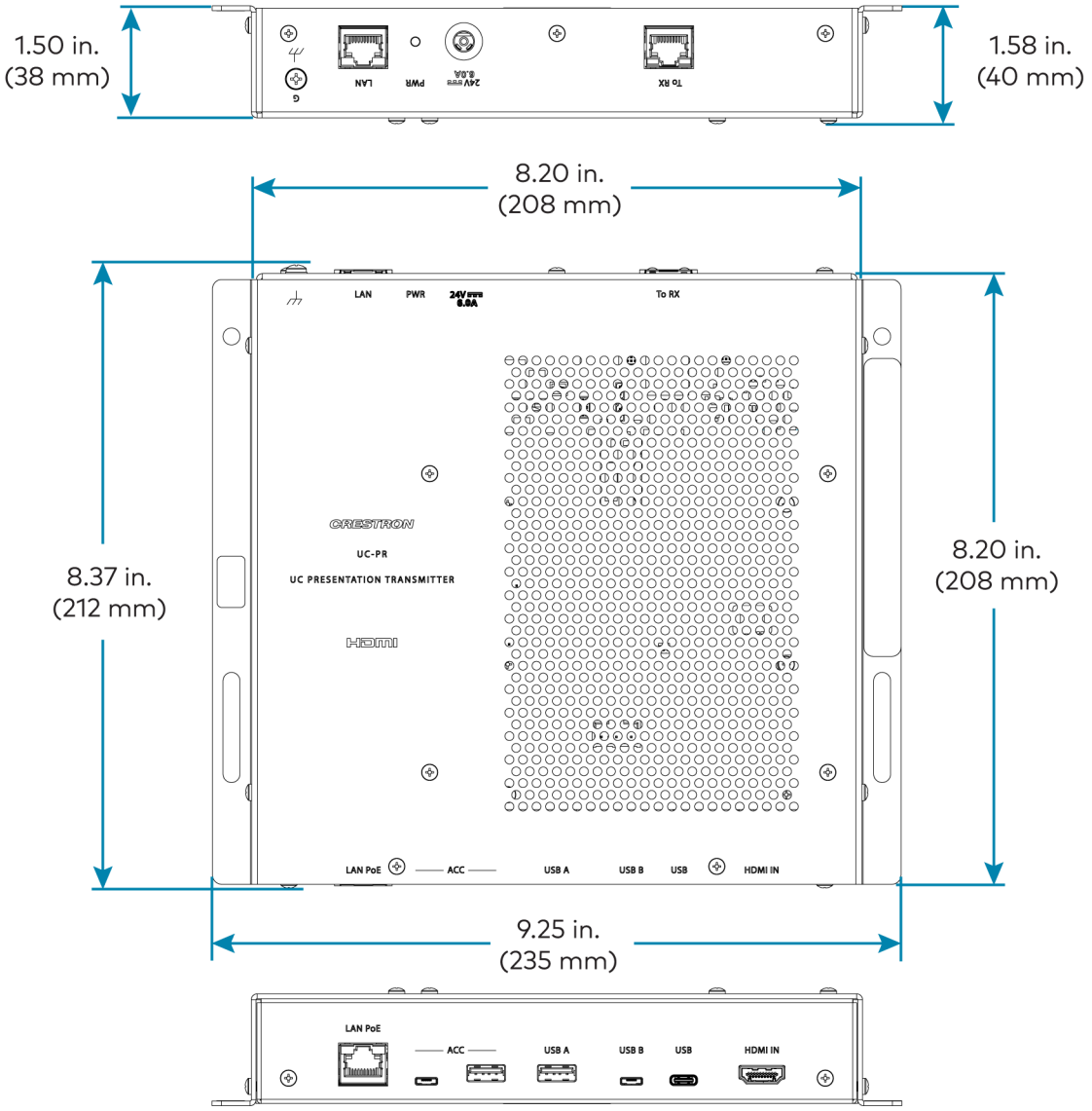

Microphone Pod Specifications

Model	CCS-UCA-MIC
Communications	A2B bus protocol, slave, synchronous data, multichannel I2S/TDM to I2S/TDM
Microphone	Triple mic array with (3) cardioid electret elements
Pickup Range	20 ft (6 m) typical, 360°
Mic Mute	(1) Capacitive button with bi-color LED, toggles between mute and unmute (affects all system mics)
Connectors	(2) RJ9 4P4C connector, female
Power	Powered via the conference device through the A2B bus
Dimensions	Height: 0.97 in (25 mm) Width: 3.81 in (97 mm) Depth: 3.42 in (87 mm)

Microphone Pod Dimension Drawing

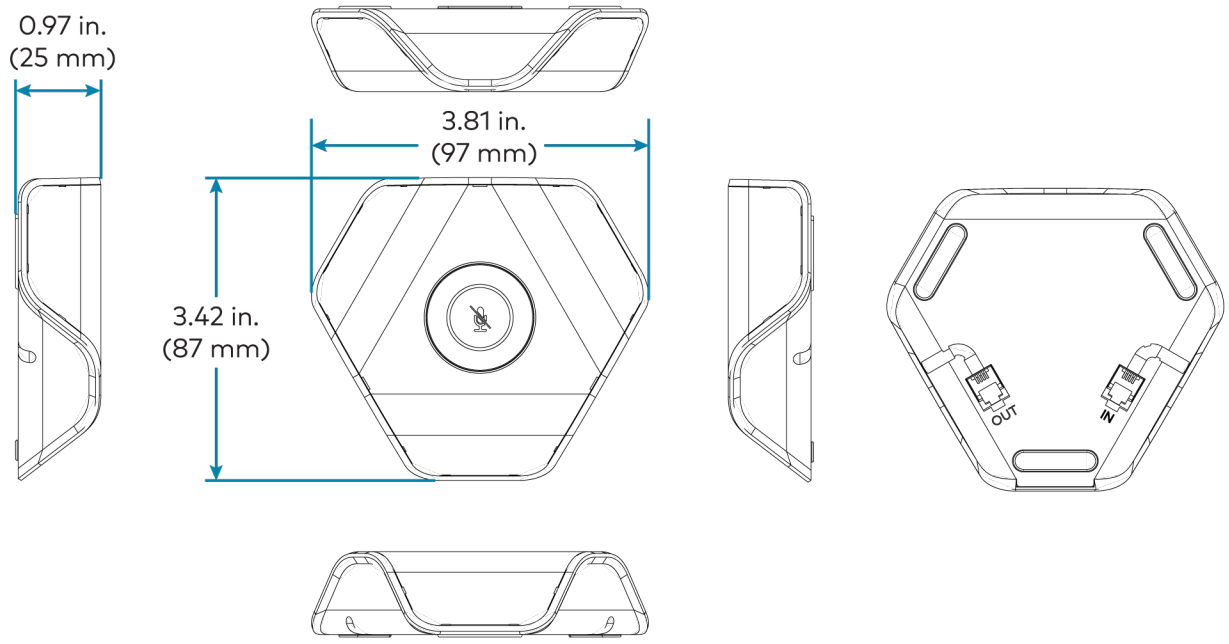

Microsoft Teams Rooms Deployment and Setup

Minimum Requirements

The following is required to set up a Microsoft Teams Rooms Platform Administrator account.

- A Microsoft Teams Rooms provisioned account (not included)
- Microsoft 365 administrator access to create resource accounts and assign licenses. For more information on required licenses, see the Online Licensing.
- For more information on deploying Microsoft Teams Rooms systems, visit Microsoft Teams deployment overview.

Pre-Deployment Checklist

Complete the following tasks to ensure successful deployment of your Crestron® Flex conference room solution.

Task	Requirement	Notes
Verify Accounts/Configure Solution	Microsoft Teams Rooms account credentials	Account credentials are required to log in to Microsoft Teams Rooms. When purchasing a Crestron Flex for use with Microsoft Teams Rooms, the Microsoft Teams desktop client is preinstalled on the UC-ENGINE. For guidelines on how to configure accounts for Microsoft Teams Rooms, visit Configure accounts for Microsoft Teams Rooms.
Confirm Connection Points	Two (2) Gigabit LAN Ports	Ensure the installation space has two available gigabit LAN ports connected to the same VLAN on the same network.
Configure Network Server	Configure your network to provide an IP address using DHCP.	The UC-ENGINE and tabletop device communicate over a VLAN network connection and require access to the Internet. Port 49500 is used by default. **NOTE:** Microsoft Teams Rooms may not be configured with a static IP address upon initial startup. Run the Microsoft Network Assessment Tool to confirm that your network is properly configured. For more information, visit Evaluate my environment.

Task	Requirement	Notes
Establish Network Communications	Open the required TCP and UDP ports.	Open TCP ports 80 and 443 and UDP ports 3478 through 3481. The TCP ports are used to connect to Microsoft's Online Services, such as SharePoint™ Online, Exchange Online, and the Teams Chat services. For more information, visit Prepare your network.

Initial Setup

1. Connect and start your selected solution as described in Quick Start Guides on page 97.
2. Follow the on-screen prompts as displayed on the control device to complete the setup. For detailed instructions on planning, deploying, and managing Microsoft Teams Rooms systems, refer to Microsoft's documentation.

Quick Start Guides

Refer to the following instructions to correctly install and connect various Microsoft Teams Rooms solutions.

- To install and connect B30/BX30, C100/CX100, MM30/MMX30, M50/MX50, and M70/MX70 series solutions powered by the UC Engine (mini PC attached to the UC Engine Bracket Assembly):

1. Identify the UC Engine model included with your Crestron Flex solution.

   > **NOTE:** The UC Engine is available in various models. Therefore, identify the included UC Engine model before installing the selected room solution and making system connections.

   - **Dell UC Engine**

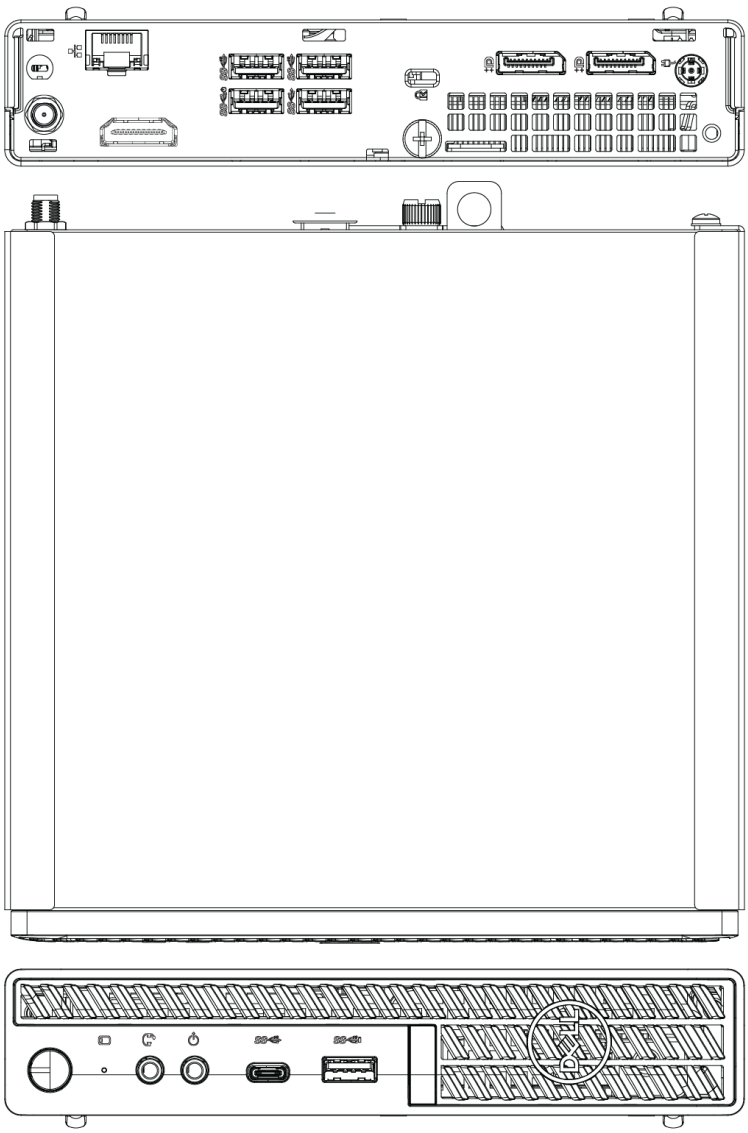

- **ASUS UC Engine**

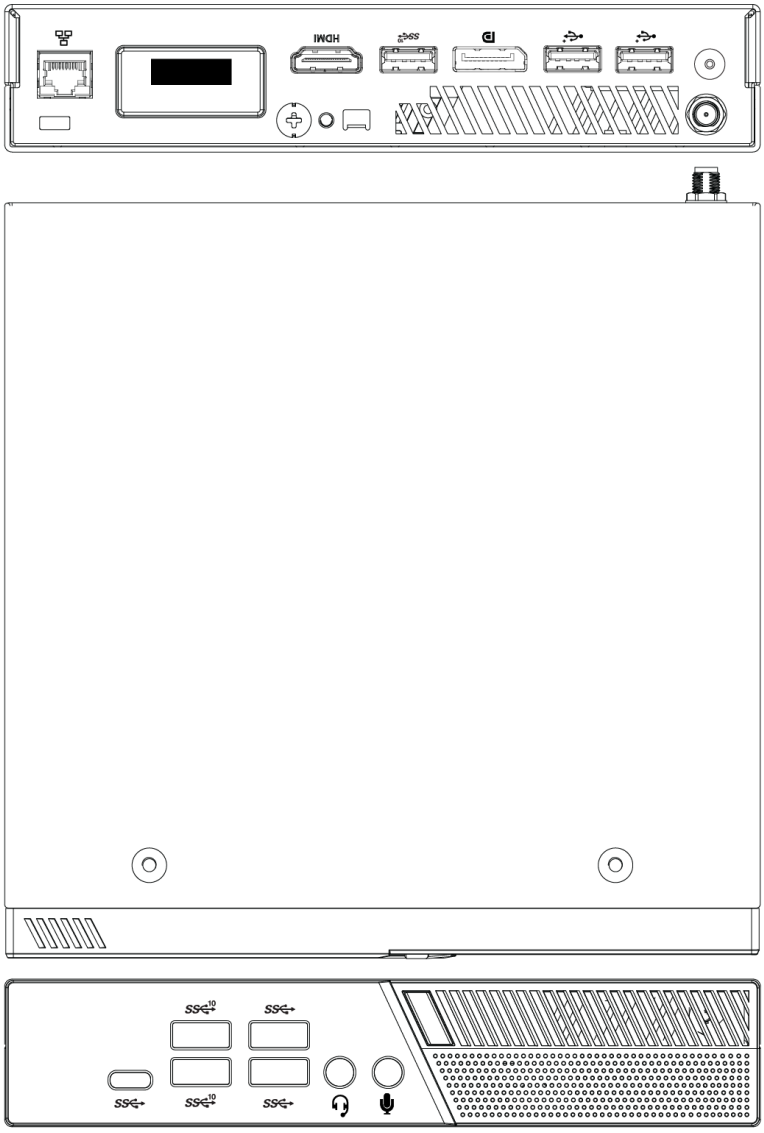

- **Lenovo UC Engine (Discontinued)**

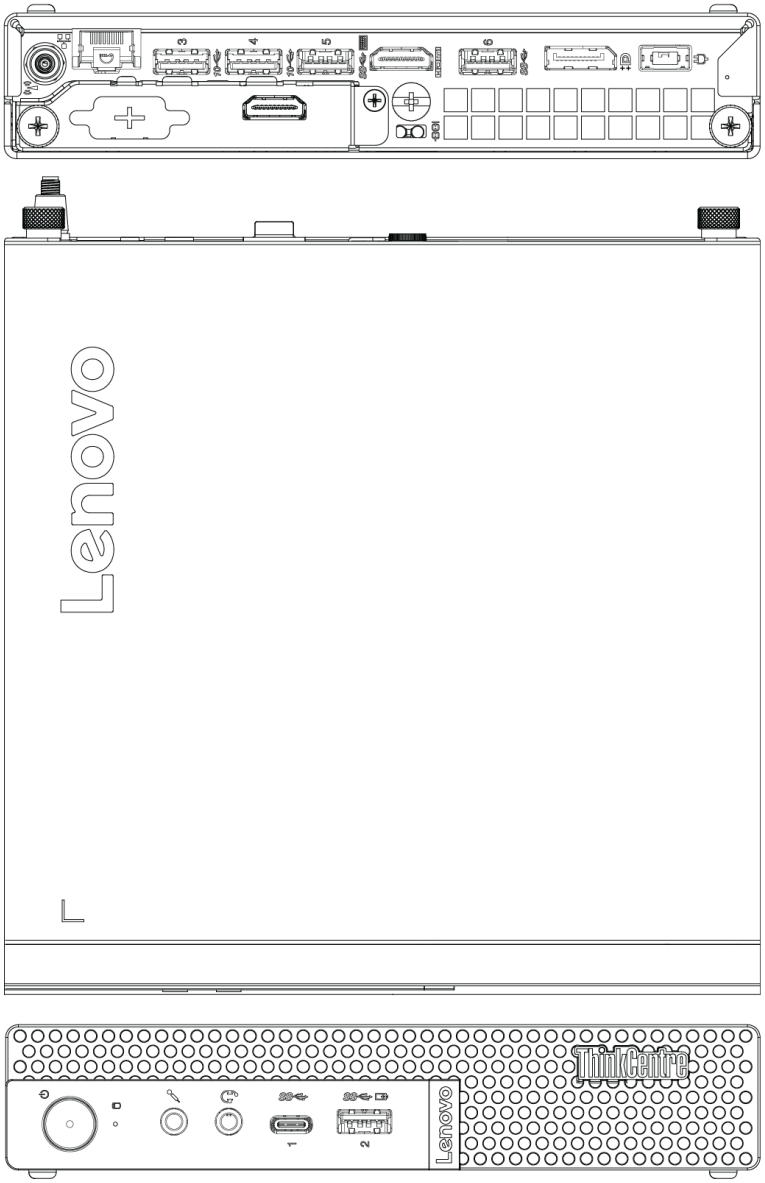

2. Once Identified, refer to the following sections for installing the devices and making system connections.
   - Microsoft Teams Rooms with Dell UC Engine.
   - Microsoft Teams Rooms with ASUS UC Engine.

Refer to Discontinued Solutions on page 699 to install and connect the discontinued Microsoft Teams Rooms solutions (including solutions powered by the discontinued Lenovo UC Engine).

UC-B70-A-T and UC-B70-A-T-I Installation

Minimum Requirements

Ensure that the below requirements are met prior to setting up the system.

- A Microsoft Teams® Room Pro license account.
- A video display (not included) connected to the videobar. A second display is optional.

In the Box

Qty.	Description
	Crestron Videobar 70
1	Crestron Videobar 70 (6512357 or 6512359)
2	Screw, M5 X 16 mm (2062699)
1	Power Adapter, DC, (2062700)
1	Power Cable, AC (2062701)
2	Inner Screw, Hex, M5 X 16 mm (2062702)
3	Wall Screw, Self Tap, 1.25 in. (32 mm) (2062704)
3	Anchor, White (2062705)
1	Wall Anchor Key (2062716)
1	Cable Shroud, Phoenix (2062717)
1	Wall Bracket, Black (2062718)
	Tabletop Touch Screen Device
1	10 in. Tabletop Touch Screen (6513438)
1	Grommet, Cable, Closed (2055455)
1	Grommet, Cable, Open (2055456)
1	Cover, Cable compartment (2055457)
	Additional Items
1	Cable, CAT5e, RJ-45 - RJ-45, 7 ft (2.1 m) (6509924)
1	Cable, CAT6a, RJ-45 - RJ-45, 20 ft (6.1 m) (6507640)
2	Cable, HDMI® 2.1, 6 ft (1.8 m) (6512150)
1	Cable, HDMI 2.1, 9 ft (2.7 m) (6512151)
1	PoE injector (6502429)

Mount the Crestron Videobar 70

The videobar can be placed on a flat surface or mounted on a wall.

Mount on a Wall

The videobar includes anchors that are suitable for mounting it on sheetrock walls up to 1/2 in. (13 mm) thickness. Masonry and other materials may require additional installer-supplied mounting hardware.

> **NOTE:** A template is included as a reference for drilling holes for the wall mounting bracket. Use the template to maintain sufficient clearance between the videobar and the display device.

The following tools are required to mount the videobar:

- Drill with 5/16 in. bit (not included)
- #1 Philips screwdriver (not included)

Preparing the Wall Mounting Surface

- For optimal viewing results, the videobar should be installed at a minimum height of 42 in. (1066 mm) or higher from the floor depending on the height of the table in front of it.
- A minimum distance of 2.25 in. (57 mm) should be maintained between the wall mounting bracket and the display device.

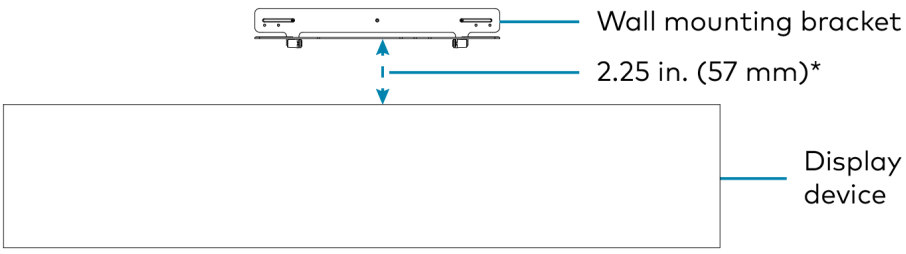

* Minimum distance between the wall mounting bracket and the display device

Mount the Wall Bracket

1. Attach the template to the desired mounting location.

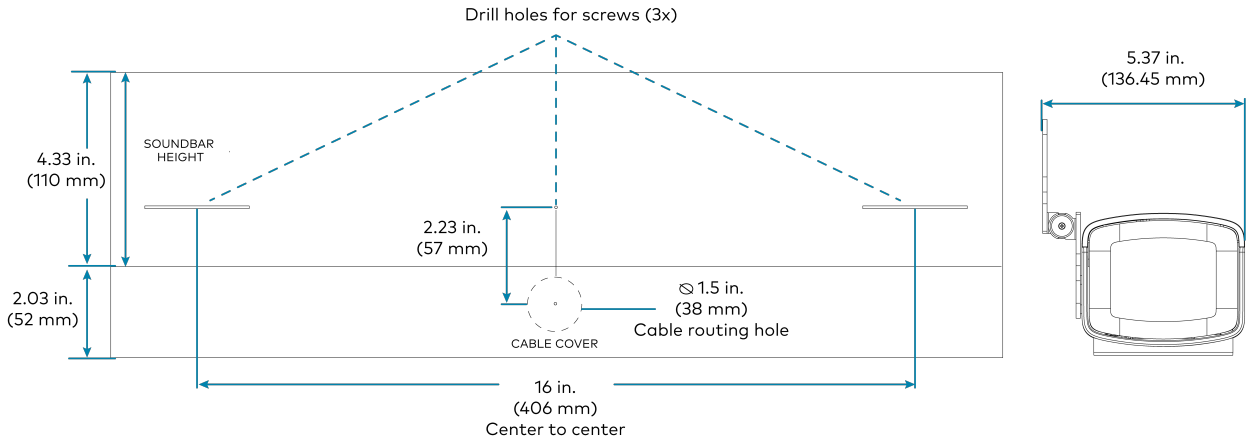

2. Drill three holes for the 1.25 in. (32 mm) wall screws and one 1.5 in. (38 mm) hole for cable routing as shown in the diagram.
3. Install the three included wall anchors into the drilled holes. Then, insert the anchor key to pop open and lock the anchors behind the hollow wall (not required for thick or solid walls).
4. Position the wall mounting bracket over the anchors, and insert the 1.25 in. (32 mm) screws into the holes.

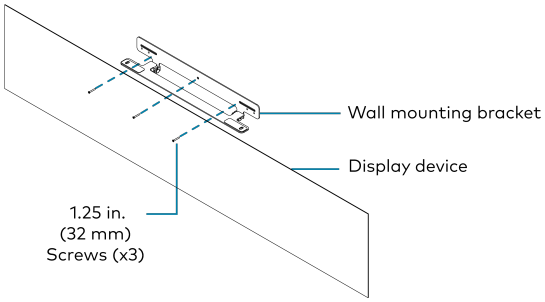

5. Tighten the screws with a #1 Philips screwdriver until the bracket is secured to the wall.

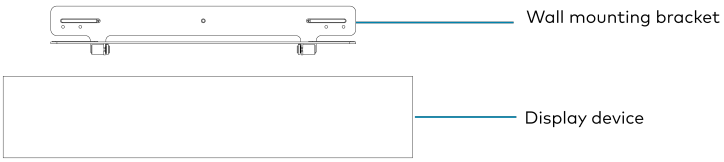

6. Place the videobar on the bracket aligning the screw holes on the bottom of the device with the holes on the bracket.
7. Insert the M5 X 16 mm hex screws (2062702) or M5 X 16 mm screws (2062699, security) from beneath the bracket and then through the holes on the bottom of the videobar.
8. Adjust the screws to keep the videobar secured to the bracket but do not tighten them.

9. **Rotate** the bracket down and place the videobar face down.
10. Route the cables through the cable cutout in the bracket and connect the cables to the videobar's ports as described in Connect on page 106.

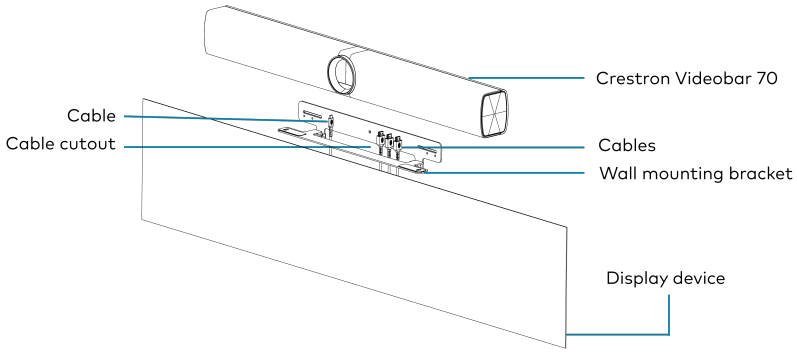

11. Rotate the bracket up and push the videobar against the bracket to lock it.

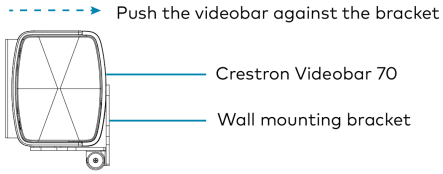

12. Tighten the M5 X 16 mm hex screws (2062702) or M5 X 16 mm screws (2062699, security) from beneath the bracket to secure the videobar to the bracket.

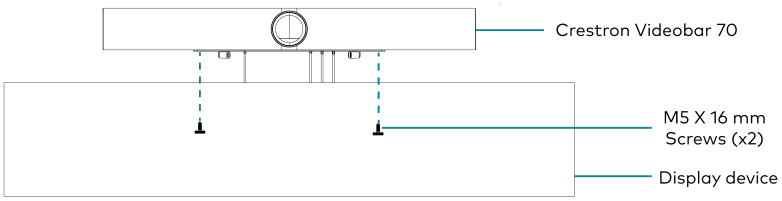

13. Attach the magnetic cable shroud to the sound bar to hide the exposed connected wires and cables.

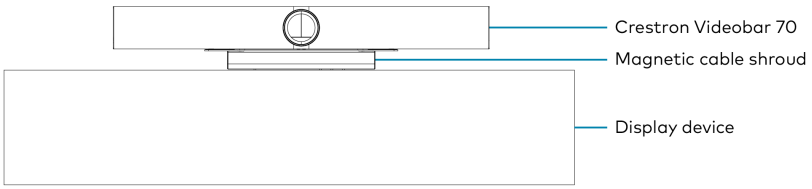

Connect

System Overview

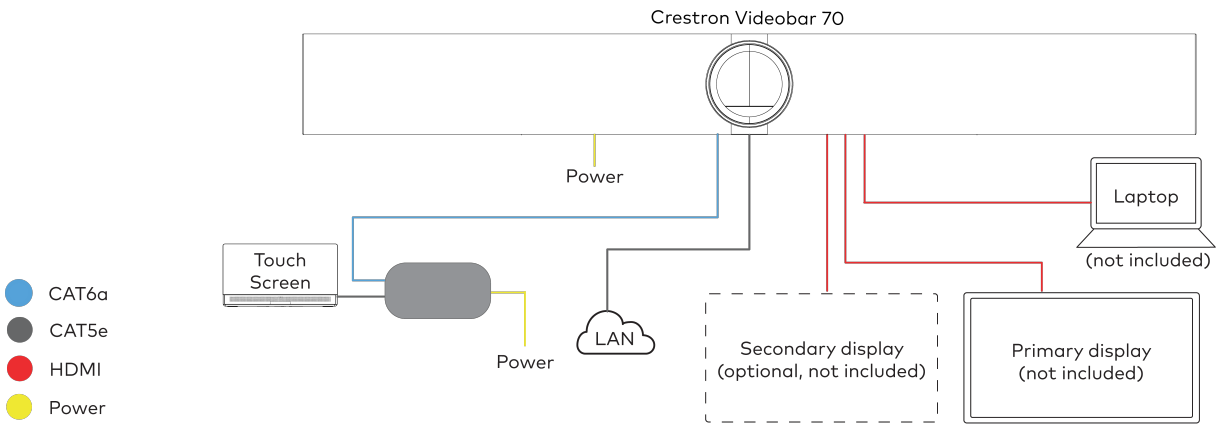

Make Connections

1. Make a direct connection for simple installation and setup by connecting the touch screen's PoE injector to the videobar.

Direct Connection

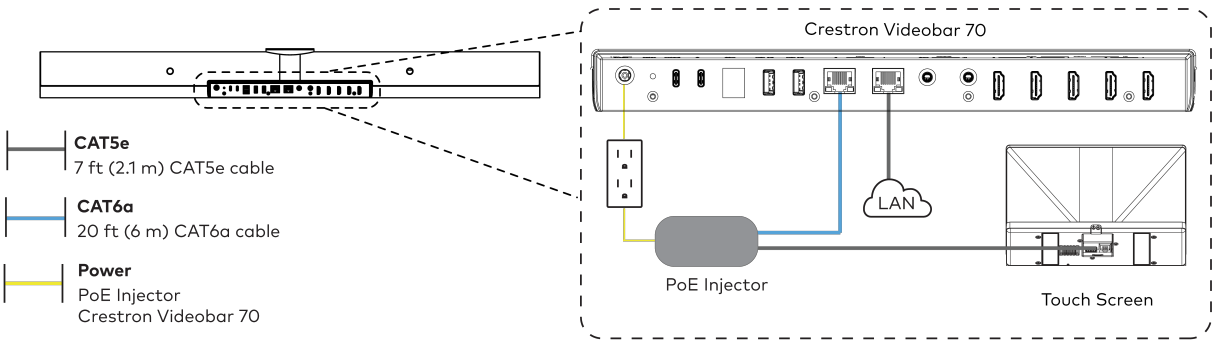

2. Make a network connection.

Network Connection

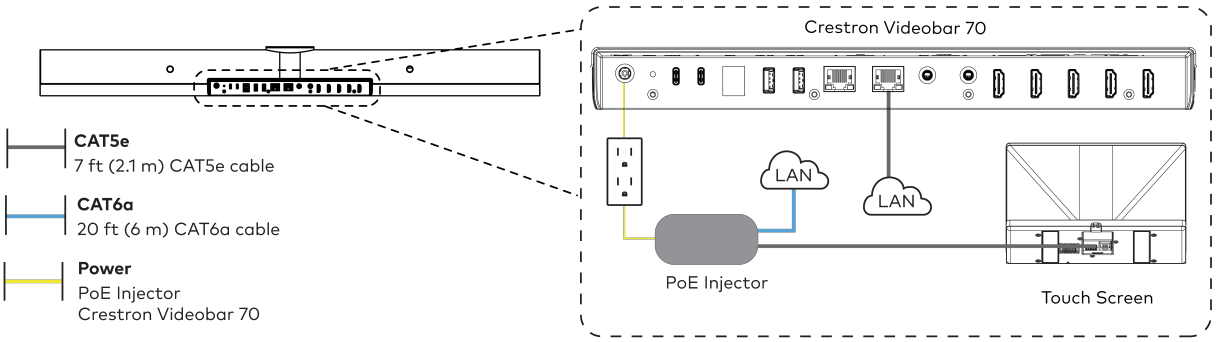

3. Connect the displays (not included) to the videobar.

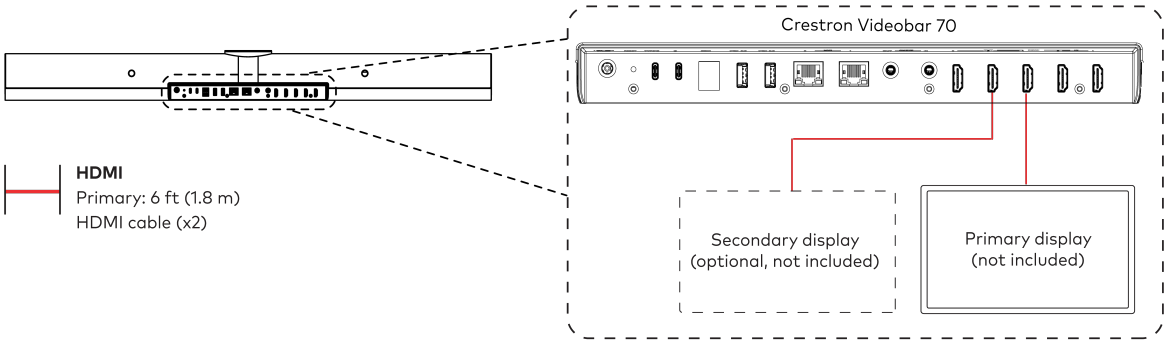

4. Connect a laptop (not included) to the videobar.

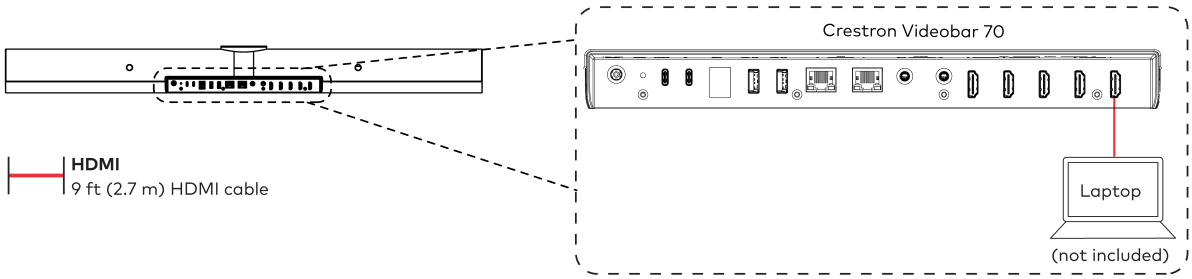

Observe the LEDs

Refer to the following table for information about the LED indicators on the videobar.

LED Indicator	Function	Color	Behavior	Indication
LED Ring	Mute	Red	Solid	Audio is muted.
	Unmute	Green	Solid	Audio is unmuted.
	Booting Status	Green	Blinking (1/4s On, 1/4s Off)	The videobar is under booting process.
	Firmware Status	Green	Blinking (1s On, 1s Off)	The firmware is being updated.

Configure

Apply Power

Apply power to the Microsoft Teams Room videobar and the other devices in the system.

Setup and Update the Videobar

1. Connect the videobar to the internet to upgrade the firmware automatically.

   After the upgrade, the Microsoft Teams Room sign in code will be displayed on the front of the room display.
2. Use the sign in code to log in to Microsoft Teams account and follow the onscreen instructions.

Factory Restore the Videobar

To factory restore the videobar:

1. Ensure the videobar is connected to the display to view the restore process.
2. Press and hold the recessed **RESET** button on the back of the videobar (using a paper clip or a similar tool) for ten seconds to initiate the factory restore.
3. Release the button when the "Factory Data Reset" message appears on the display.
   The system will display a black screen if the **RESET** button is not released when the "Factory Data Reset" message is displayed. Power cycle and repeat step 1.

   > **NOTE:** The factory restore erases all user data, and the videobar returns to its initial booting status.

4. After rebooting, perform a soft restore using the web UI to enable the authentication again.

Pair the Touch Screen with the Videobar

1. Power up the TS-1070 touch screen by connecting to the network PoE switch having internet.
2. After the touchscreen powers up, follow the on-screen instructions to set the language and time zone.
3. Teams sign-in code will appear on the touchscreen. Follow the on-screen instructions to pair devices.

Microsoft Teams Rooms with Dell UC Engine

This section provides the following information:

UC-B30-T and UC-B30-T-WM

Minimum Requirements

Ensure that the below requirements are met prior to setting up the system.

- A video display (not included) connected to the UC Engine. A second display is optional.
- A Microsoft Teams Rooms provisioned account (not included).

> **NOTE:** Unless otherwise indicated in this section, the connection procedure is the same for UC-B30-T and UC-B30-T-WM.

In The Box

Qty.	Description	UC-B30-T	UC-B30-T-WM
	Tabletop Touch Screen		
1	10.1 in. Tabletop Touch Screen (6511748)	✓	✗
1	Grommet, Cable, Closed (2055455)		
1	Grommet, Cable, Open (2055456)		
1	Cover, Cable compartment (2055457)		
	Wall Mount Touch Screen		
1	10.1 in. Wall Mount Touch Screen (6511975)	✗	✓
	Mounting hardware		
	UC Bracket Assembly		
1	UC Bracket Assembly with UC Engine and HDMI content ingest (UC-BRKT-200-S-T-ASSY, 6512689)	✓	✓
2	Anchor, Drywall, Plastic, 3/8 in. x 1/2 in. (9.5 mm x 12.7 mm) (2052565)		
1	Key, Anchor (4529654)		
2	Screw, 8-AB x 1-1/2 in. (38.1 mm), Pan Head, Combo (2052567)		
4	Tie Wrap (2047935)		
	Crestron Flex Smart Soundbar with Camera		
1	UC-SB1-CAM-FLEX Soundbar with Camera (6511283)	✓	✓
1	Power supply (2045873) with cord (2042043)		
1	Cable, USB 3.0, A - B, 6 ft (1.8 m) (2053077)		
	Mounting hardware		
	Additional Items		
1	PoE injector (6502429)	✓	✓
1	Cable, CAT6a, RJ-45 - RJ-45, 20 ft (6.1 m) (6507640)	✓	✓
2	Cable, CAT5e, RJ-45 - RJ-45, 7 ft (2.1 m) (6509924)	✓	✓
1	Cable, HDMI 2.1, 6 ft (1.8 m) (6512150)	✓	✓
1	Cable, HDMI, 20 ft (6.1 m) (6503567)	✓	✓
1	Cable, DisplayPort to HDMI, 6 ft (1.8 m) (6508282)	✓	✓

Mount Devices

Mount the UC Bracket Assembly

Mount the UC Bracket Assembly to VESA® compliant display devices, a wall, or other building structure. Anchors and screws are supplied for installation on walls with 3/8 in. (9.5 mm) to 3/4 in. (19 mm) thickness.

CAUTION: Preinstalled screws may protrude from the back of the UC Bracket Assembly. Exercise caution when handling the UC Bracket Assembly to avoid scratching or damaging surfaces.

NOTE: The integrated cable tie wraps are reusable. Avoid damaging the cable tie wraps.

Mount the Soundbar with Camera

Mount the included smart soundbar with camera according to the UC-SB1-CAM-FLEX Quick Start (Doc. 8606).

Mount the Wall-Mount Touch Screen

Mount the included wall-mount touch screen according to the TSW-1070 Product Manual (Doc. 8550).

Identify the UC Bracket Assembly

The UC Bracket Assembly is available in two models. Identify the model included with your Crestron Flex system. Tap or click the corresponding image below to navigate to the appropriate connection instructions.

UC Bracket Assembly with HD-CONV-USB-200

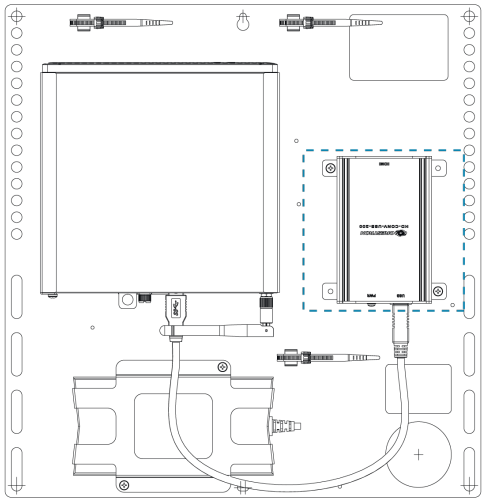

UC Bracket Assembly with HD-CONV-USB-300

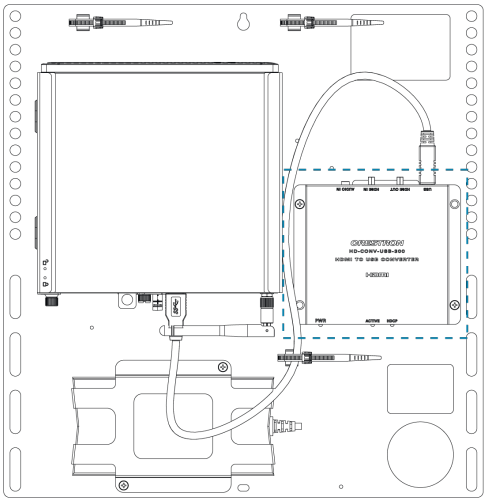

System Overview

For UC Bracket Assembly with HD-CONV-USB-200

When connections are complete, the system appears as shown below. Refer to Make Connections on page 115 for detailed connection instructions.

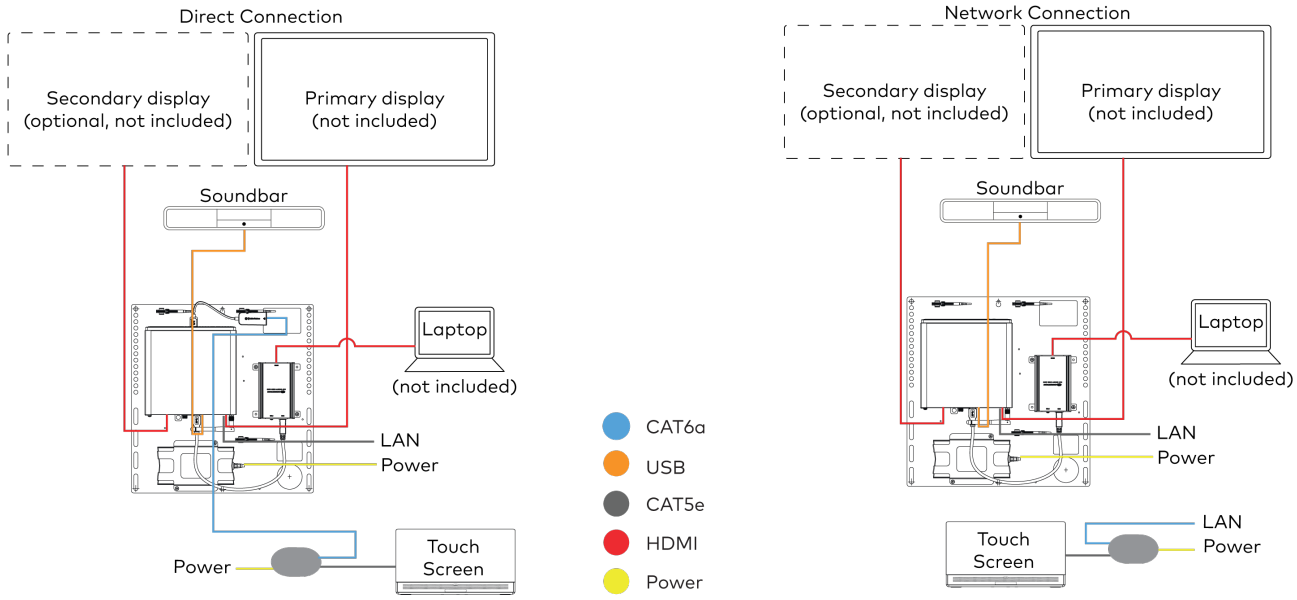

For UC Bracket Assembly with HD-CONV-USB-300

When connections are complete, the system appears as shown below. Refer to Make Connections on page 115 for detailed connection instructions.

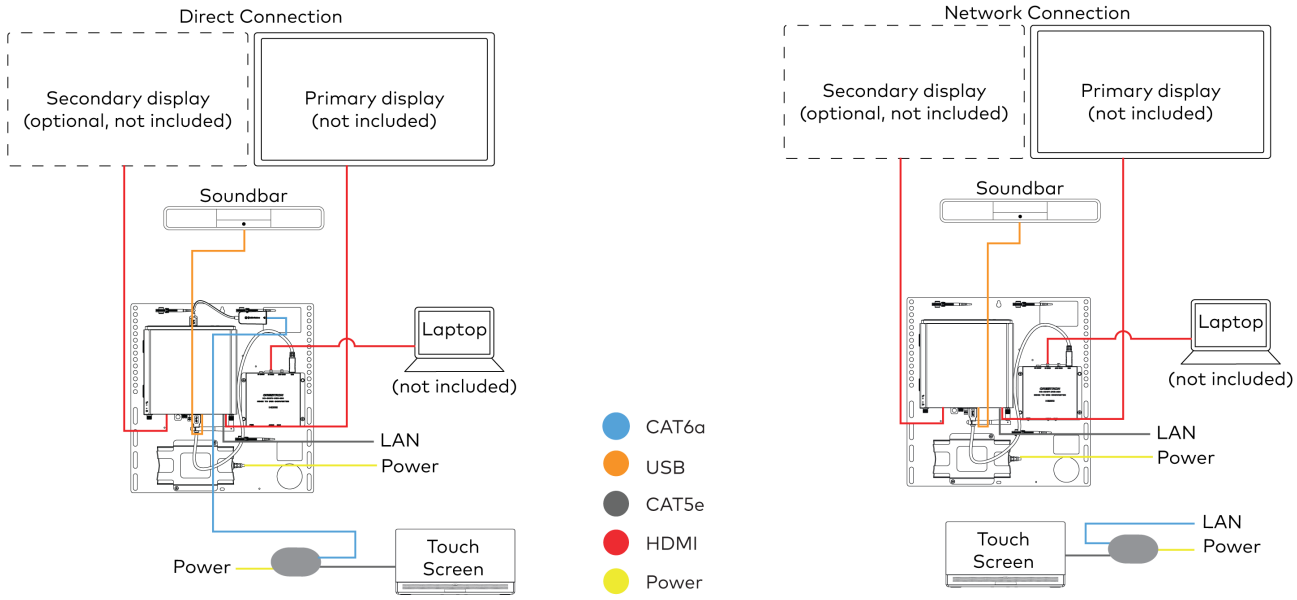

Make Connections

NOTE: For reference, the UC Bracket Assembly is shown with the HD-CONV-USB-200 in the following connection diagrams. Unless otherwise indicated in this guide, the connections remain the same for the UC Bracket Assembly with HD-CONV-USB-200 and HD-CONV-USB-300.

1. Make UC Engine connections as shown in the following illustrations. The touch screen can communicate with the UC Engine over a direct connection or a network connection. Select one of the connection types as described below.
   - Make a direct connection for simple installation and setup. Only use the direct connect adapter to connect the touch screen's PoE injector to the UC Engine. Do not use the direct connect adapter to connect the UC Engine to the network.

     Direct Connection

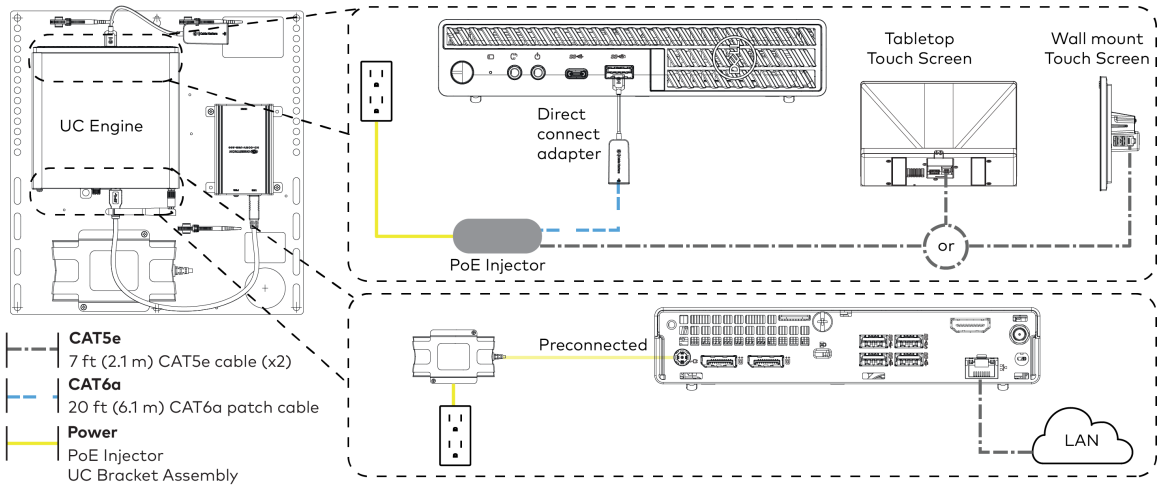

   - Make a network connection if the system is to be managed by the XiO Cloud® service.

     NOTE: When a network connection is used, disconnect the direct connect adapter from the UC Engine.

     Network Connection

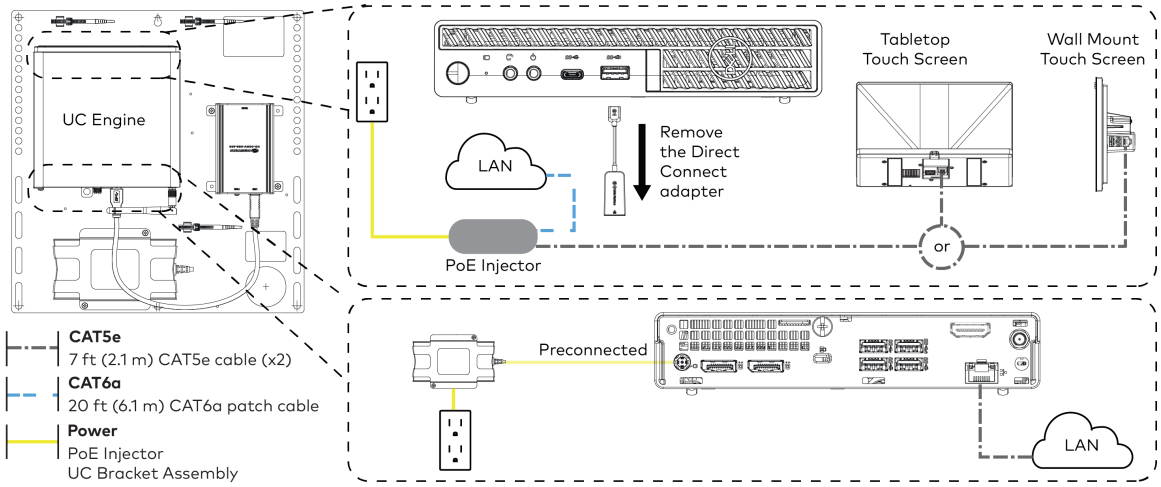

2. Connect displays to the UC Engine.

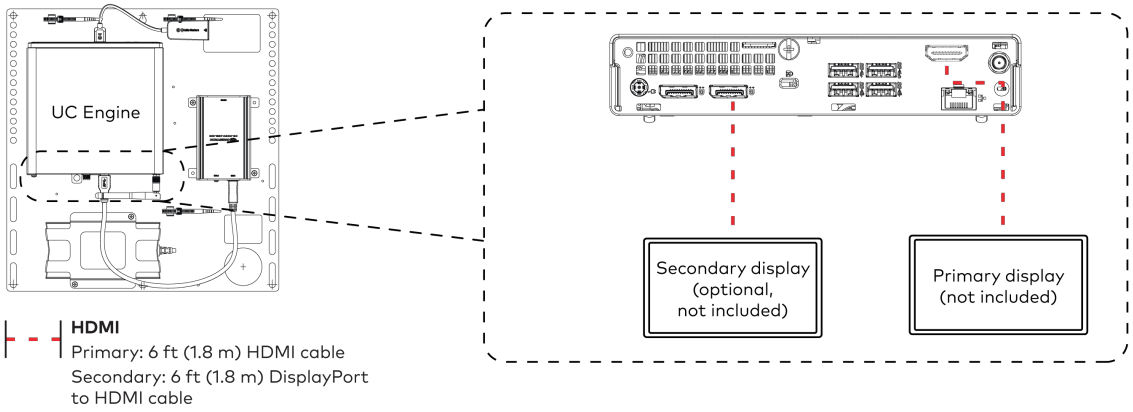

3. Connect the soundbar to the UC Engine as shown in the image below. Do not connect the soundbar to any of the other USB ports.

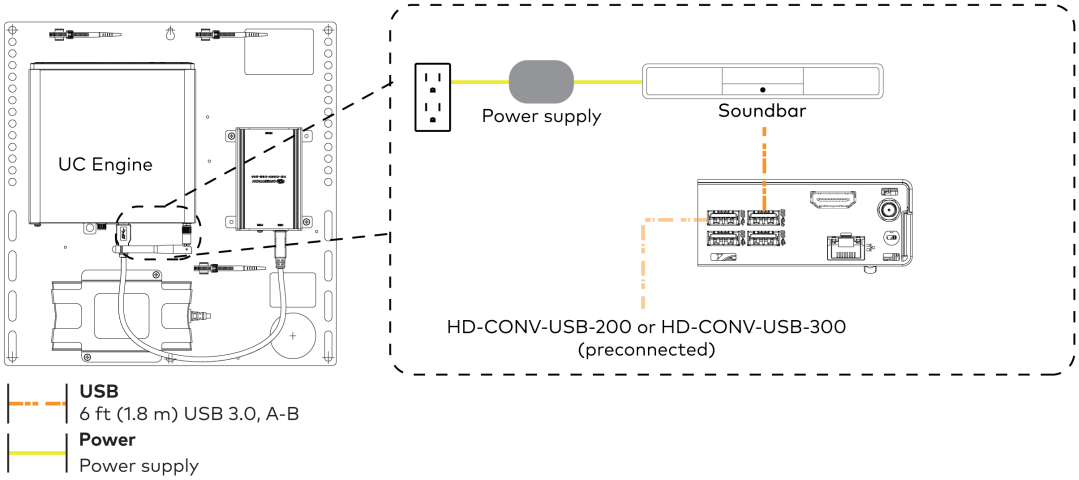

4. Connect a laptop to the HD-CONV-USB-200 or HD-CONV-USB-300.

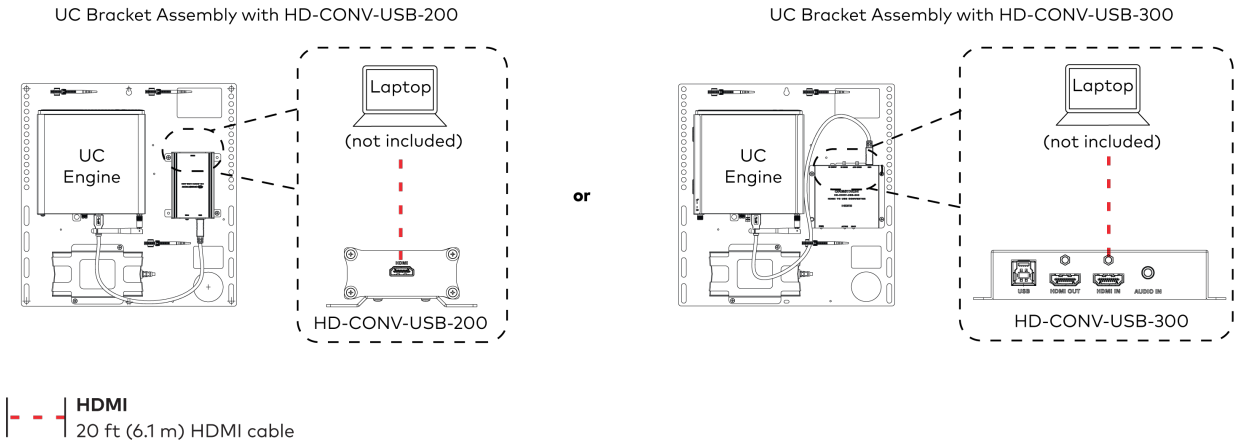

5. Bundle the cables to the bracket assembly with the integrated cable tie wraps. The cable tie wraps are reusable.

Apply Power

Press the power button on the bottom of the UC Engine and apply power to all of the other devices in the system.

Configure the Touch Screen

> **NOTE:** If a direct connection was made during installation, skip to Configure the System on page 117.

1. On a computer, enter the IP address of the touch screen into a web browser. Log in and navigate to **Settings** > **Applications**.

   > **NOTES:**
   > - The touch screen (via the PoE injector) and computer must be on the same network switch and VLAN.
   > - A login with administrative rights for the touch screen is required.

2. Enter the following information in the appropriate fields:
   - **Teams Video PC Address**: Enter the IP address or hostname of the UC Engine.

     > **NOTE:** The hostname is printed on a label affixed to the UC Engine (mounted on the UC bracket assembly).

   - **Teams Video PC Port**: By default, port number 49500 is used. If a different port number has been configured on the UC Engine, enter that port number instead.
   - **Teams Video Username**: Enter the login username for the UC Engine. (The default username is "admin".)
   - **Teams Video Password**: Enter the login password for the UC Engine. (The default password is "sfb".)
3. Select **Save Changes**.

Configure the System

Use the touch screen and your Microsoft Teams credentials to configure the UC Engine, as described in Configuration on page 296. For detailed information on deploying Microsoft Teams Rooms, refer to the Microsoft Teams Rooms documentation.

UC-BX30-T and UC-BX30-T-WM

Minimum Requirements

Ensure that the below requirements are met prior to setting up the system.

- A video display (not included) connected to the UC Engine. A second display is optional.
- A Microsoft Teams Rooms provisioned account (not included).

> **NOTE:** Unless otherwise indicated in this section, the connection procedure is the same for UC-BX30-T and UC-BX30-T-WM.

In The Box

Qty.	Description	UC-BX30-T	UC-BX30-T-WM
	Tabletop Touch Screen		
1	10.1 in. Tabletop Touch Screen (6511748)	✓	✗
1	Grommet, Cable, Closed (2055455)		
1	Grommet, Cable, Open (2055456)		
1	Cover, Cable compartment (2055457)		
	Wall Mount Touch Screen		
1	10.1 in. Wall Mount Touch Screen (6511975)	✗	✓
	Mounting hardware		
	UC Bracket Assembly		
1	UC Bracket Assembly with UC Engine and HDMI or AV over CAT5 content ingest (UC-BRKT-260-P-T-ASSY, 6512691)	✓	✓
1	Power pack (2045870)		
2	Anchor, Drywall, Plastic, 3/8 in. x 1/2 in. (9.5 mm x 12.7 mm) (2052565)		
1	Key, Anchor (4529654)		
2	Screw, 8-AB x 1-1/2 in. (38.1 mm), Pan Head, Combo (2052567)		
4	Tie Wrap (2047935)		
	Crestron Flex Smart Soundbar with Camera		
1	UC-SB1-CAM-FLEX Soundbar with Camera (6511283)	✓	✓
1	Power supply (2045873) with cord (2042043)		
1	Cable, USB 3.0, A - B, 6 ft (1.8 m) (2053077)		
	Mounting hardware		
	UC Presentation Transmitter with Cable Organizer		

Qty.	Description	UC-BX30-T	UC-BX30-T-WM
1	Presentation transmitter (6510936)	✓	✓
1	Cable Organizer		
1	Power pack (2056363) with cord (2001134)		
1	Bracket, power supply (2056257)		
1	Cable, USB to USB, 6.56 ft (2 m) (2056116)		
1	Cable, HDMI®, 6.56 ft (2 m) (2056117)		
1	Cable, USB 2.0, A to Micro B, 6.56 ft (2 m) (2055504)		
8	Screw, 10-9 x 5/8 in. (15.9 mm), Pan Head, Phillips, Black (2054365)		
	Additional Items		
2	Cable, CAT6a, RJ-45 - RJ-45, 20 ft (6.1 m) (6507640)	✓	✓
2	Cable, CAT5e, RJ-45 - RJ-45, 7 ft (2.1 m) (6509924)	✓	✓
1	Cable, HDMI 2.1, 6 ft (1.8 m) (6512150)	✓	✓
1	Cable, DisplayPort to HDMI, 6 ft (1.8 m) (6508282)	✓	✓

Mount Devices

Mount the UC Bracket Assembly

Mount the UC Bracket Assembly to VESA® compliant display devices, a wall, or other building structure. Anchors and screws are supplied for installation on walls with 3/8 in. (9.5 mm) to 3/4 in. (19 mm) thickness.

CAUTION: Preinstalled screws may protrude from the back of the UC Bracket Assembly. Exercise caution when handling the UC Bracket Assembly to avoid scratching or damaging surfaces.

NOTE: The integrated cable tie wraps are reusable. Avoid damaging the cable tie wraps.

Mount the UC Presentation Transmitter

Mount the UC Presentation Transmitter to the underside of a table using the supplied screws. The supplied screws support installation on tables with a thickness of 1 in. (25.4 mm) minimum.

Mount the Cable Organizer for the UC-PR

Mount the Cable Organizer according to the Cable Organizer for the UC-PR (Doc. 8966).

Mount the Soundbar with Camera

Mount the included smart soundbar with camera according to the UC-SB1-CAM-FLEX Quick Start (Doc. 8606).

Mount the Wall-Mount Touch Screen

Mount the included wall-mount touch screen according to the TSW-1070 Product Manual (Doc. 8550).

System Overview

When connections are complete, the system appears as shown below. The laptop connections shown below may vary based on the selected connection method. Refer to Make Connections on page 121 for detailed connection instructions.

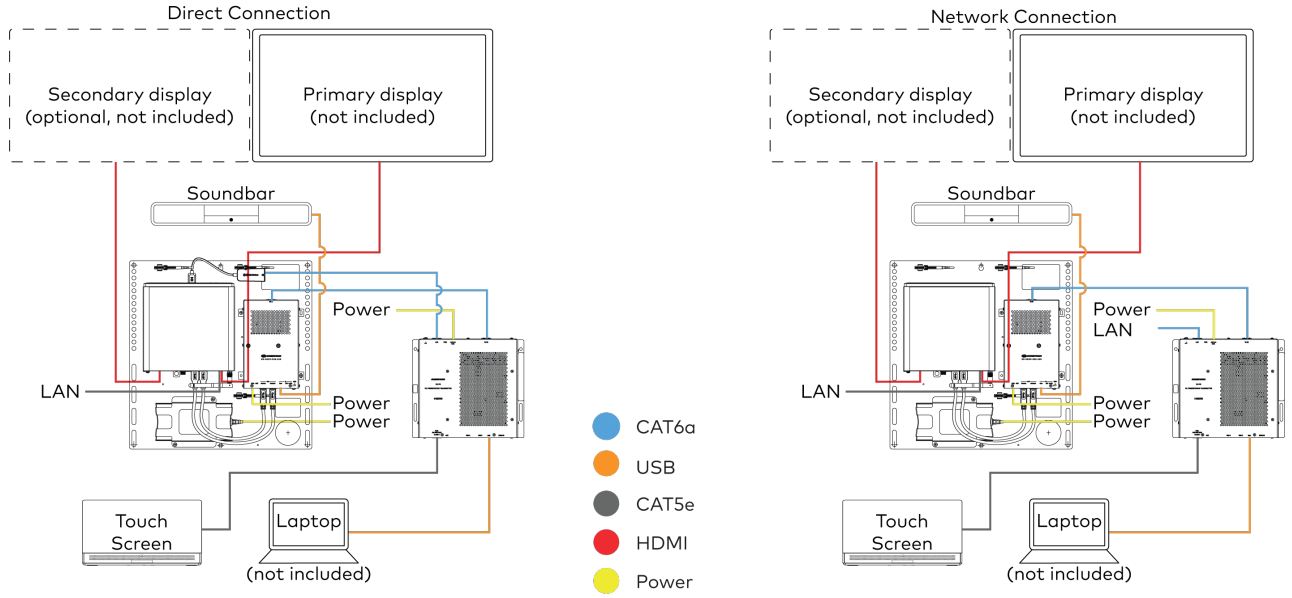

Make Connections

1. Make UC Engine connections as shown in the following illustrations. The UC Presentation Transmitter can communicate with the UC Engine over a direct connection or a network connection. Select one of the connection types as described below.
   - Make a direct connection for simple installation and setup. Only use the direct connect adapter to connect the UC Presentation Transmitter to the UC Engine. Do not use the direct connect adapter to connect the UC Engine to the network.

     Direct Connection

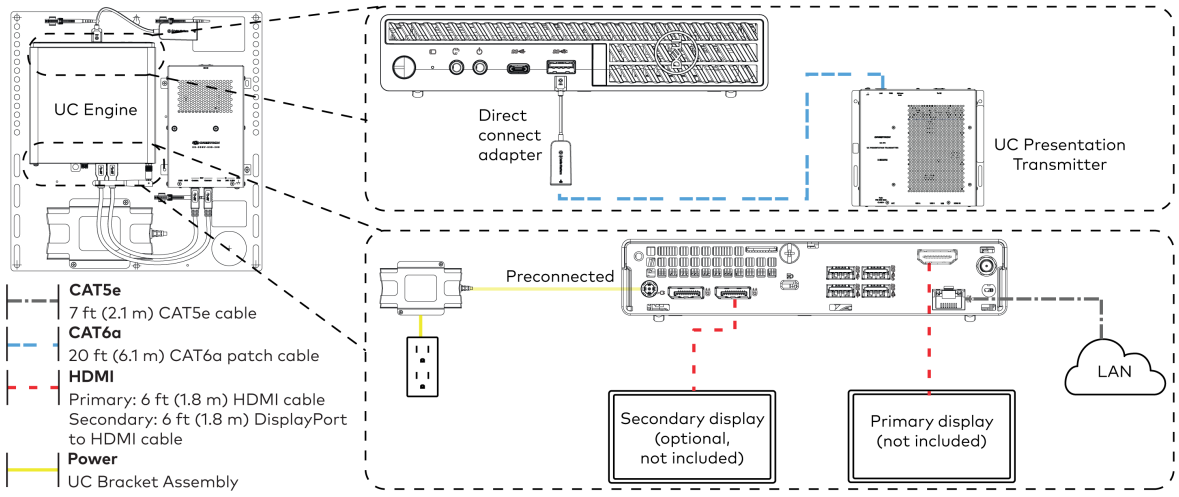

- Make a network connection if the system is to be managed by the XiO Cloud® service.

> **NOTE:** When a network connection is used, disconnect the direct connect adapter from the UC Engine.

Network Connection

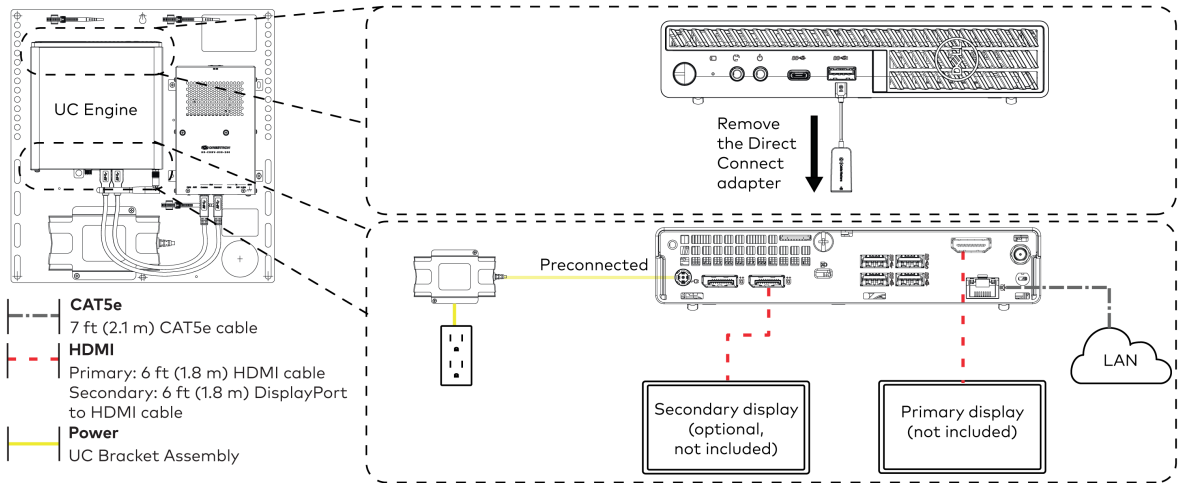

2. Connect the power supply and the soundbar to the bottom of the content ingest device (HD-CONV-USB-260). Connect the power supplies to an AC power outlet.

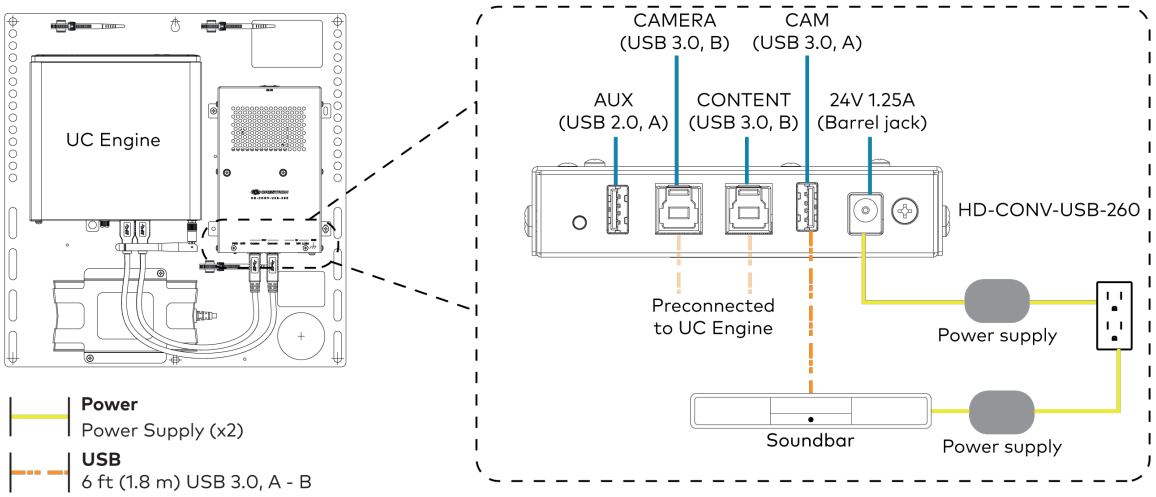

3. Connect power and the content ingest device (HD-CONV-USB-260) to the top of the UC Presentation Transmitter. Connect the UC Engine or LAN to make a direct or network connection as described in step 1.

NOTE: If a longer cable between the UC Presentation Transmitter and the HD-CONV-USB-260 is needed, use a DigitalMedia™ Ultra cable only. The maximum supported cable length is 300 ft (91.4 m).

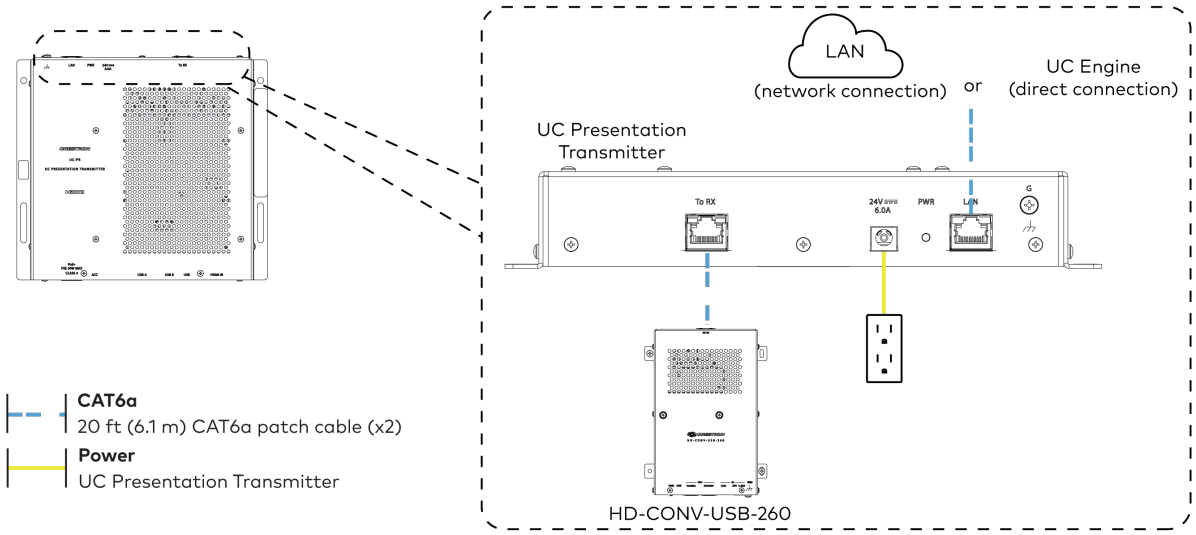

4. Connect the touch screen to the bottom of the UC Presentation Transmitter.

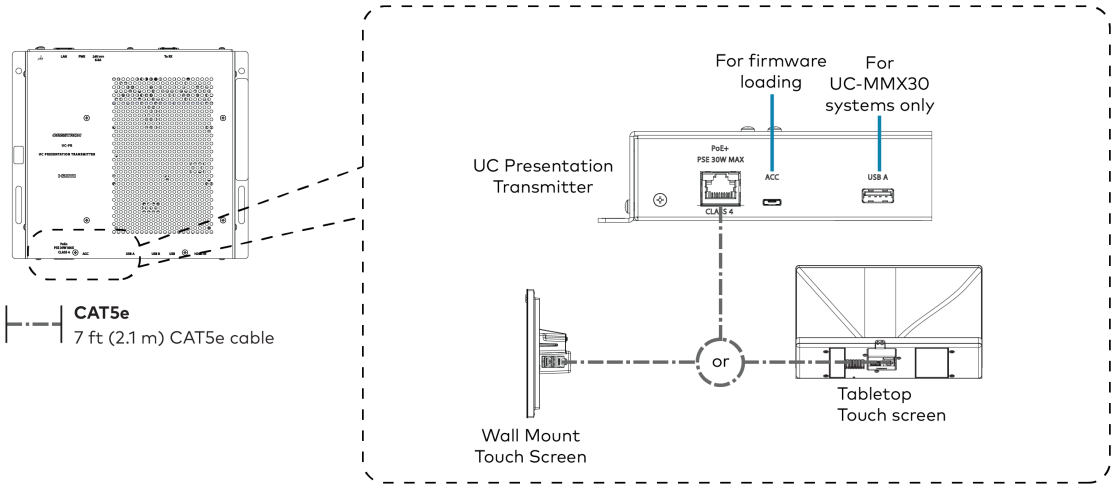

5. Connect a laptop to either the USB port or both the HDMI and USB B ports on the bottom of the UC Presentation Transmitter. Select a connection type based on the available ports on the user's laptop.

> **NOTE:** If the USB port is used along with either the HDMI or USB B port, the UC Presentation Transmitter will communicate via the USB port by default.

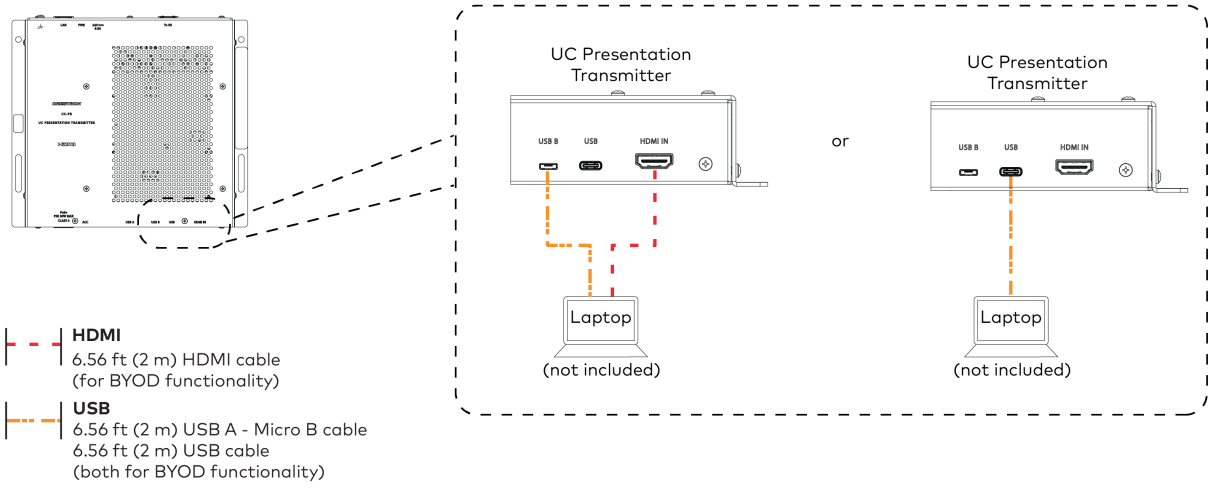

6. Bundle the cables to the bracket assembly with the integrated cable tie wraps. The cable tie wraps are reusable.

Apply Power

Press the power button on the bottom of the UC Engine and apply power to all of the other devices in the system.

Configure the Touch Screen

NOTE: If a direct connection was made during installation, skip to Configure the System on page 125.

1. On a computer, enter the IP address of the touch screen into a web browser. Log in and navigate to **Settings** > **Applications**.

   NOTES:
   - The touch screen (via the PoE injector) and computer must be on the same network switch and VLAN.
   - A login with administrative rights for the touch screen is required.

2. Enter the following information in the appropriate fields:
   - **Teams Video PC Address**: Enter the IP address or hostname of the UC Engine.

     NOTE: The hostname is printed on a label affixed to the UC Engine (mounted on the UC bracket assembly).

   - **Teams Video PC Port**: By default, port number 49500 is used. If a different port number has been configured on the UC Engine, enter that port number instead.
   - **Teams Video Username**: Enter the login username for the UC Engine. (The default username is "admin".)
   - **Teams Video Password**: Enter the login password for the UC Engine. (The default password is "sfb".)
3. Select **Save Changes**.

Configure the System

Use the touch screen and your Microsoft Teams credentials to configure the UC Engine, as described in Configuration on page 296. For detailed information on deploying Microsoft Teams Rooms, refer to the Microsoft Teams Rooms documentation.

UC-B30-T-GV

Minimum Requirements

Ensure that the below requirements are met prior to setting up the system.

- A video display (not included) connected to the UC Engine. A second display is optional.
- A Microsoft Teams Rooms provisioned account (not included).

In The Box

Qty.	Description
	Tabletop Touch Screen
1	10.1 in. Tabletop Touch Screen (6510833)
1	Grommet, Cable, Closed (2055455)
1	Grommet, Cable, Open (2055456)
1	Cover, Cable compartment (2055457)
	UC Bracket Assembly
1	UC Bracket Assembly with UC Engine and HDMI content ingest (UC-BRKT-200-S-T-ASSY, 6512689)
2	Anchor, Drywall, Plastic, 3/8 in. x 1/2 in. (9.5 mm x 12.7 mm) (2052565)
1	Key, Anchor (4529654)
2	Screw, 8-AB x 1-1/2 in. (38.1 mm), Pan Head, Combo (2052567)
4	Tie Wrap (2047935)
	Crestron Flex Smart Soundbar with Camera
1	UC-SB1-CAM-FLEX Soundbar with Camera (6511283)
1	Power supply (2045873) with cord (2042043)
1	Cable, USB 3.0, A - B, 6 ft (1.8 m) (2053077)
	Mounting hardware
	Additional Items
1	Cable, CAT6a, RJ-45 - RJ-45, 20 ft (6.1 m) (6507640)
2	Cable, CAT6a, RJ-45 - RJ-45, 7 ft (2.1 m) (6507637)
1	Cable, HDMI 2.1, Goverment Version, 6 ft (1.8 m) (6513984)
1	Cable, DisplayPort to HDMI, Government Version, 6 ft (1.8 m) (6513983)

Mount Devices

Mount the UC Bracket Assembly

Mount the UC Bracket Assembly to VESA® compliant display devices, a wall, or other building structure. Anchors and screws are supplied for installation on walls with 3/8 in. (9.5 mm) to 3/4 in. (19 mm) thickness.

CAUTION: Preinstalled screws may protrude from the back of the UC Bracket Assembly. Exercise caution when handling the UC Bracket Assembly to avoid scratching or damaging surfaces.

NOTE: The integrated cable tie wraps are reusable. Avoid damaging the cable tie wraps.

Mount the Soundbar with Camera

Mount the included smart soundbar with camera according to the UC-SB1-CAM-FLEX Quick Start (Doc. 8606).

Identify the UC Bracket Assembly

The UC Bracket Assembly is available in two models. Identify the model included with your Crestron Flex system. Tap or click the corresponding image below to navigate to the appropriate connection instructions.

UC Bracket Assembly with HD-CONV-USB-200

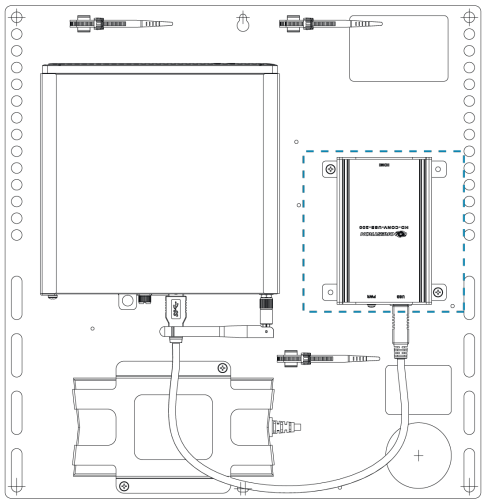

UC Bracket Assembly with HD-CONV-USB-300

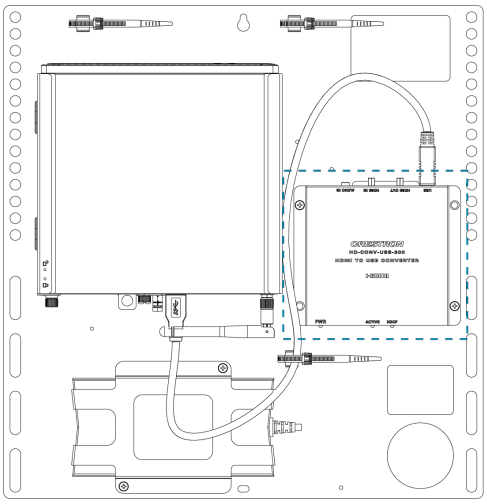

System Overview

For UC Bracket Assembly with HD-CONV-USB-200

When connections are complete, the system appears as shown below. Refer to Make Connections on page 129 for detailed connection instructions.

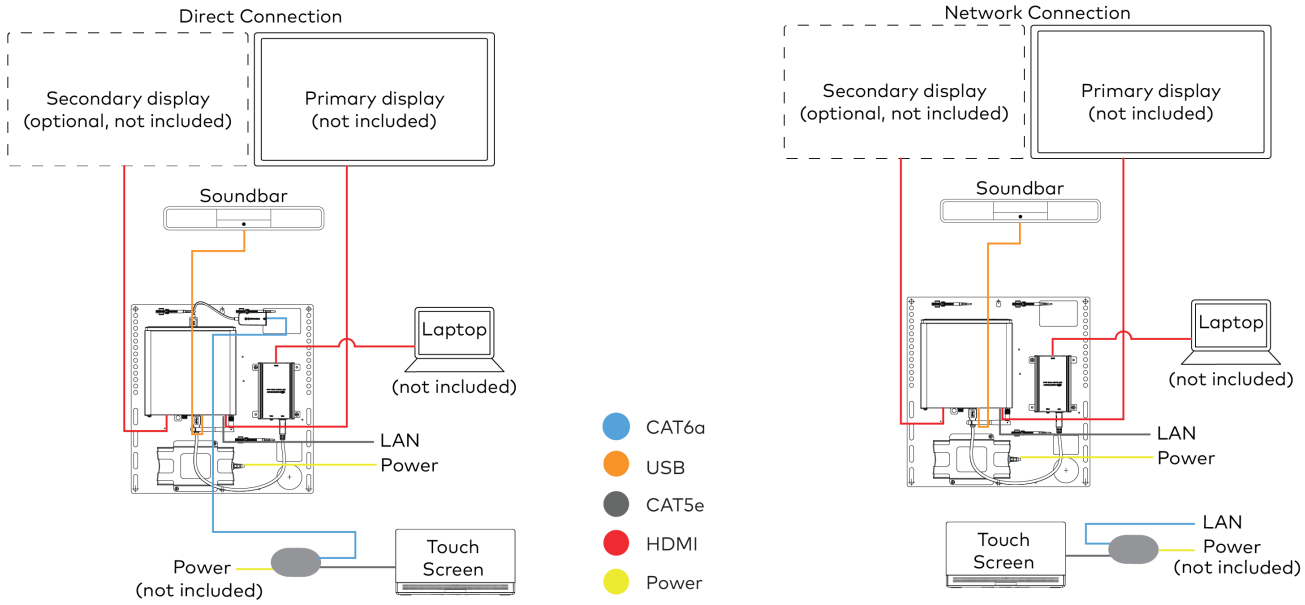

For UC Bracket Assembly with HD-CONV-USB-300

When connections are complete, the system appears as shown below. Refer to Make Connections on page 129 for detailed connection instructions.

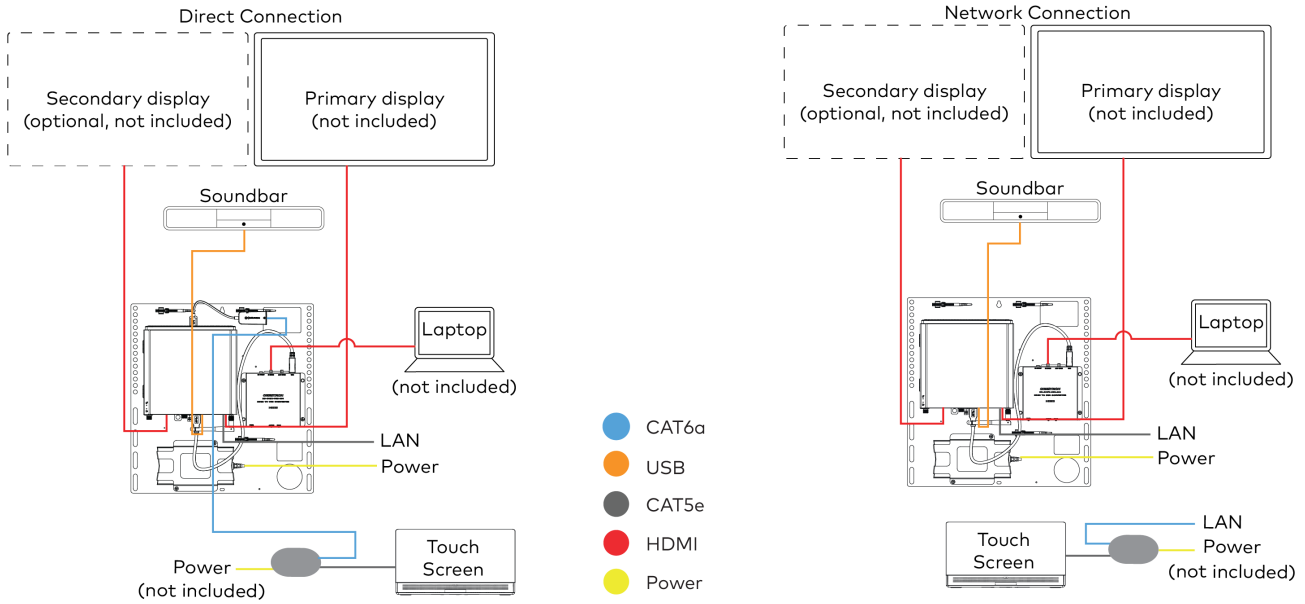

Make Connections

NOTE: For reference, the UC Bracket Assembly is shown with the HD-CONV-USB-200 in the following connection diagrams. Unless otherwise indicated in this guide, the connections remain the same for the UC Bracket Assembly with HD-CONV-USB-200 and HD-CONV-USB-300.

1. Make UC Engine connections as shown in the following illustrations. The touch screen can communicate with the UC Engine over a direct connection or a network connection. Select one of the connection types as described below.
   - Make a direct connection for simple installation and setup. Only use the direct connect adapter to connect the touch screen's PoE injector (not included) to the UC Engine. Do not use the direct connect adapter to connect the UC Engine to the network.

     Direct Connection

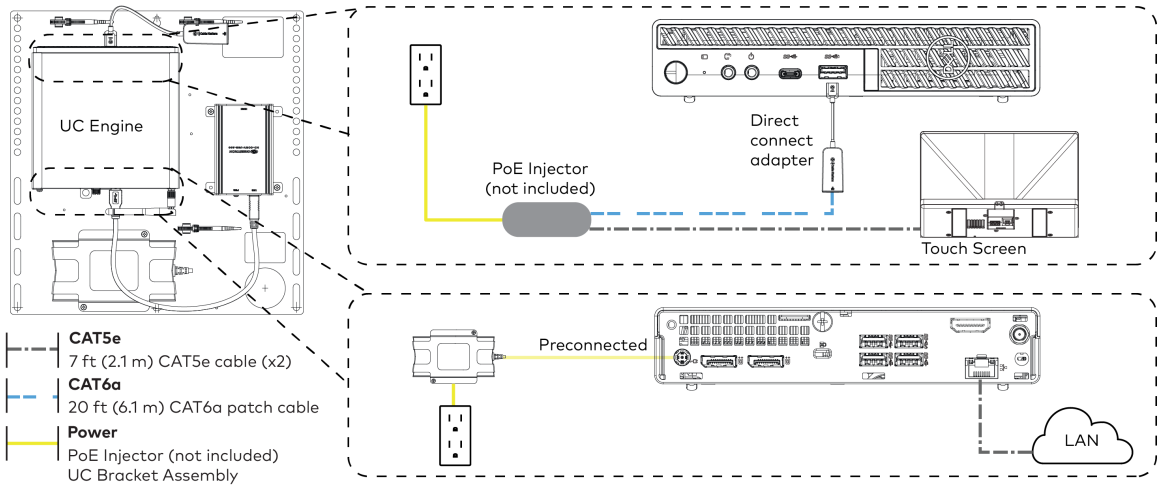

- Make a network connection if the system is to be managed by the XiO Cloud® service.

> **NOTE:** When a network connection is used, disconnect the direct connect adapter from the UC Engine.

Network Connection

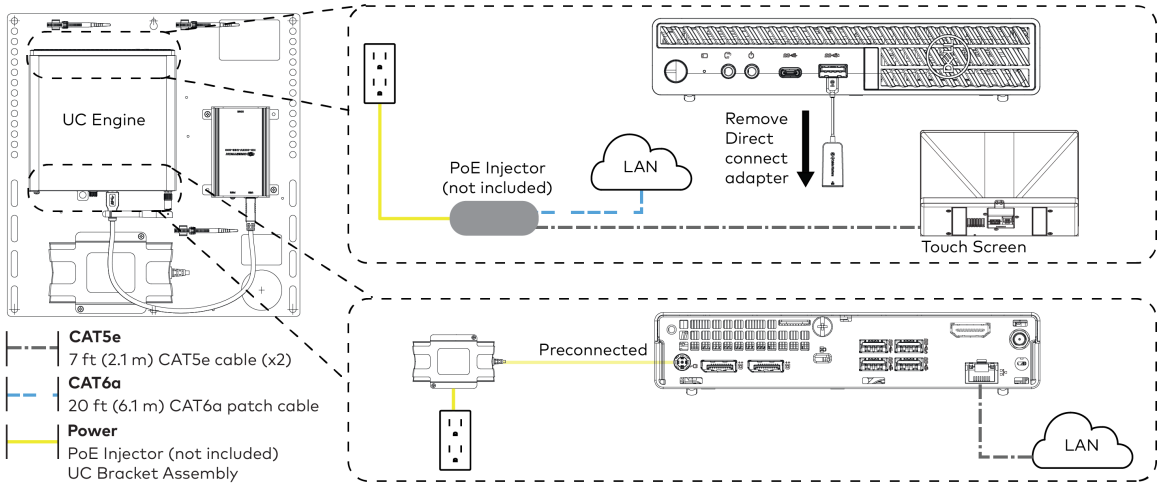

2. Connect displays to the UC Engine.

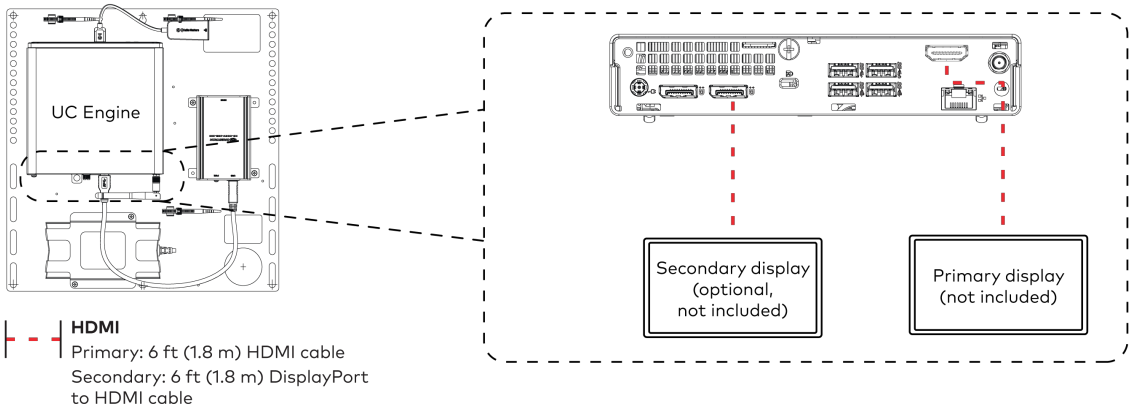

3. Connect the soundbar to the UC Engine as shown in the image below. Do not connect the soundbar to any of the other USB ports.

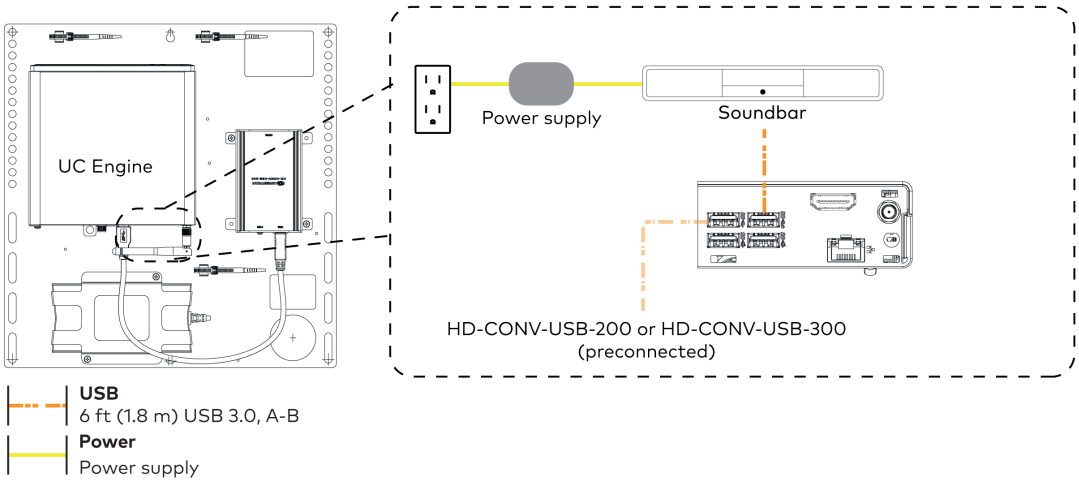

4. Connect a laptop to the HD-CONV-USB-200 or HD-CONV-USB-300.

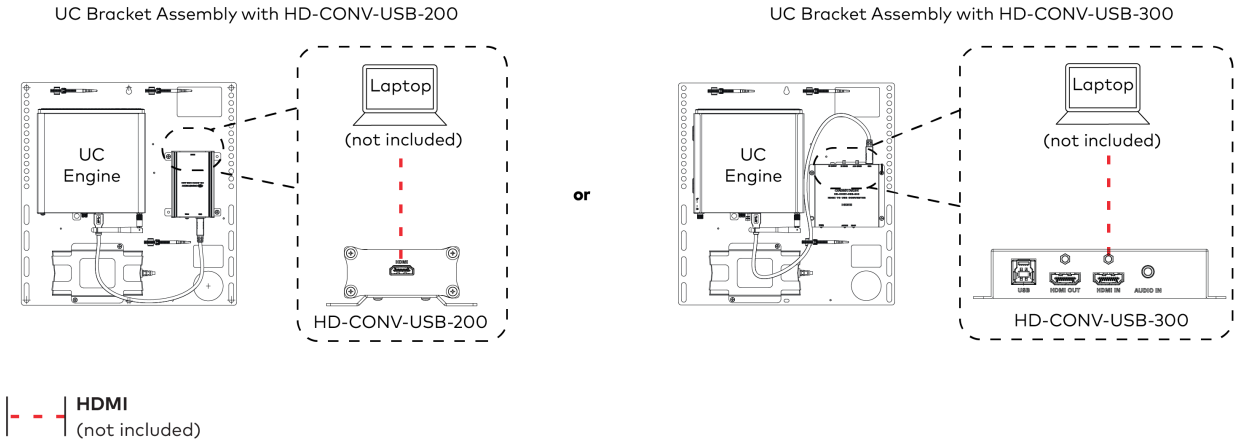

5. Bundle the cables to the bracket assembly with the integrated cable tie wraps. The cable tie wraps are reusable.

Apply Power

Press the power button on the bottom of the UC Engine and apply power to all of the other devices in the system.

Configure the Touch Screen

> **NOTE:** If a direct connection was made during installation, skip to Configure the System on page 132.

1. On a computer, enter the IP address of the touch screen into a web browser. Log in and navigate to **Settings** > **Applications**.

   NOTES:
   - The touch screen (via the PoE injector) and computer must be on the same network switch and VLAN.
   - A login with administrative rights for the touch screen is required.

2. Enter the following information in the appropriate fields:
   - **Teams Video PC Address**: Enter the IP address or hostname of the UC Engine.

     NOTE: The hostname is printed on a label affixed to the UC Engine (mounted on the UC bracket assembly).

   - **Teams Video PC Port**: By default, port number 49500 is used. If a different port number has been configured on the UC Engine, enter that port number instead.
   - **Teams Video Username**: Enter the login username for the UC Engine. (The default username is "admin".)
   - **Teams Video Password**: Enter the login password for the UC Engine. (The default password is "sfb".)
3. Select **Save Changes**.

Configure the System

Use the touch screen and your Microsoft Teams credentials to configure the UC Engine, as described in Configuration on page 296. For detailed information on deploying Microsoft Teams Rooms, refer to the Microsoft Teams Rooms documentation.

UC-BX30-T-GV

Minimum Requirements

Ensure that the below requirements are met prior to setting up the system.

- A video display (not included) connected to the UC Engine. A second display is optional.
- A Microsoft Teams Rooms provisioned account (not included).

In The Box

Qty.	Description
	Tabletop Touch Screen
1	10.1 in. Tabletop Touch Screen (6510833)
1	Grommet, Cable, Closed (2055455)
1	Grommet, Cable, Open (2055456)
1	Cover, Cable compartment (2055457)
	UC Bracket Assembly
1	UC Bracket Assembly with UC Engine and HDMI or AV over CAT5 content ingest (UC-BRKT-260-P-T-ASSY, 6512691)
1	Power pack (2045870)
2	Anchor, Drywall, Plastic, 3/8 in. x 1/2 in. (9.5 mm x 12.7 mm) (2052565)
1	Key, Anchor (4529654)
2	Screw, 8-AB x 1-1/2 in. (38.1 mm), Pan Head, Combo (2052567)
4	Tie Wrap (2047935)
	Crestron Flex Smart Soundbar with Camera
1	UC-SB1-CAM-FLEX Soundbar with Camera (6511283)
1	Power supply (2045873) with cord (2042043)
1	Cable, USB 3.0, A - B, 6 ft (1.8 m) (2053077)
	Mounting hardware
	UC Presentation Transmitter with Cable Organizer
1	Presentation transmitter (6510936)
1	Cable Organizer
1	Power pack (2056363) with cord (2001134)
1	Bracket, power supply (2056257)
1	Cable, USB to USB, 6.56 ft (2 m) (2056116)
1	Cable, HDMI®, 6.56 ft (2 m) (2056117)
1	Cable, USB 2.0, A to Micro B, 6.56 ft (2 m) (2055504)
8	Screw, 10-9 x 5/8 in. (15.9 mm), Pan Head, Phillips, Black (2054365)
	Additional Items
2	Cable, CAT6a, RJ-45 - RJ-45, 20 ft (6.1 m) (6507640)

Qty.	Description
2	Cable, CAT6a, RJ-45 - RJ-45, 7 ft (2.1 m) (6507637)
1	Cable, HDMI 2.1, Goverment Version, 6 ft (1.8 m) (6513984)
1	Cable, DisplayPort to HDMI, Government Version, 6 ft (1.8 m) (6513983)

Mount Devices

Mount the UC Bracket Assembly

Mount the UC Bracket Assembly to VESA® compliant display devices, a wall, or other building structure. Anchors and screws are supplied for installation on walls with 3/8 in. (9.5 mm) to 3/4 in. (19 mm) thickness.

CAUTION: Preinstalled screws may protrude from the back of the UC Bracket Assembly. Exercise caution when handling the UC Bracket Assembly to avoid scratching or damaging surfaces.

NOTE: The integrated cable tie wraps are reusable. Avoid damaging the cable tie wraps.

Mount the UC Presentation Transmitter

Mount the UC Presentation Transmitter to the underside of a table using the supplied screws. The supplied screws support installation on tables with a thickness of 1 in. (25.4 mm) minimum.

Mount the Cable Organizer for the UC-PR

Mount the Cable Organizer according to the Cable Organizer for the UC-PR (Doc. 8966).

Mount the Soundbar with Camera

Mount the included smart soundbar with camera according to the UC-SB1-CAM-FLEX Quick Start (Doc. 8606).

System Overview

When connections are complete, the system appears as shown below. The laptop connections shown below may vary based on the selected connection method. Refer to Make Connections on page 136 for detailed connection instructions.

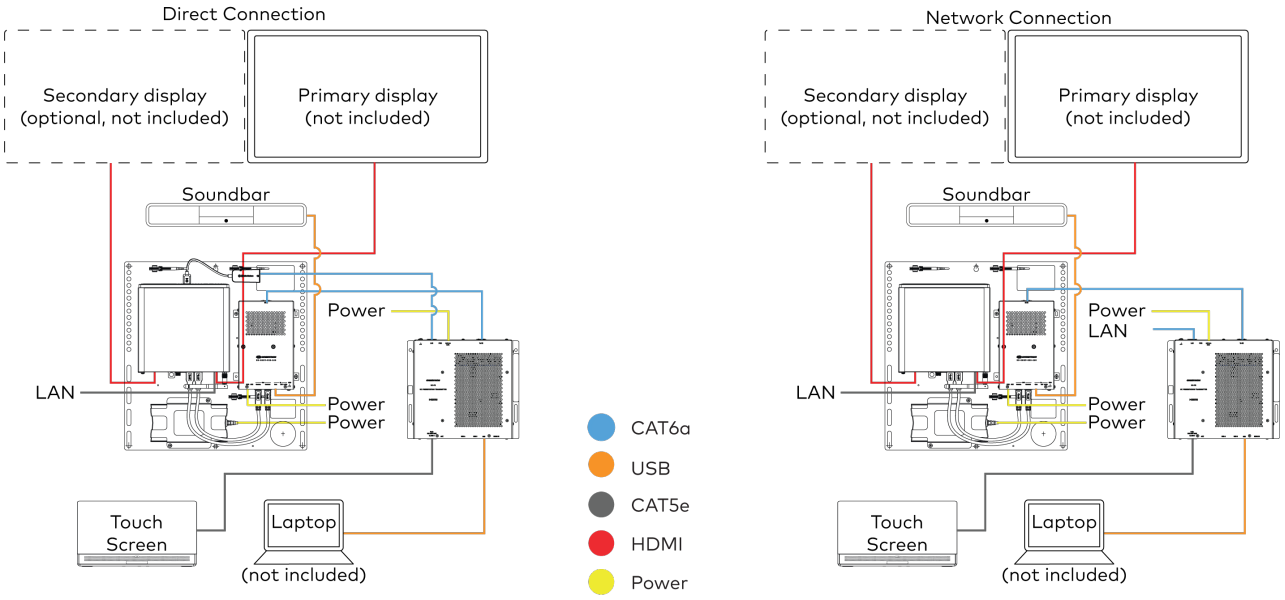

Make Connections

1. Make UC Engine connections as shown in the following illustrations. The UC Presentation Transmitter can communicate with the UC Engine over a direct connection or a network connection. Select one of the connection types as described below.
   - Make a direct connection for simple installation and setup. Only use the direct connect adapter to connect the UC Presentation Transmitter to the UC Engine. Do not use the direct connect adapter to connect the UC Engine to the network.

     Direct Connection

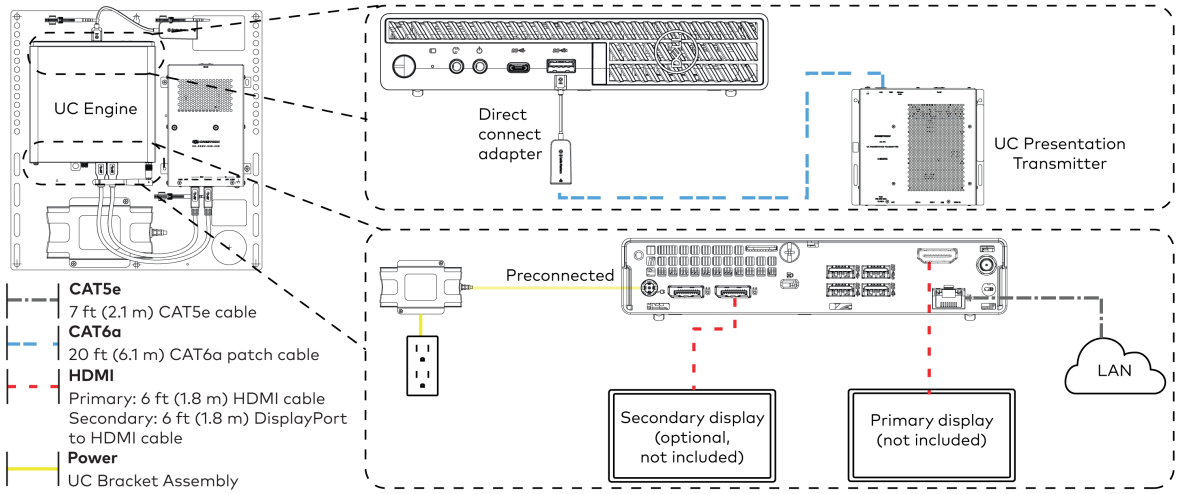

- Make a network connection if the system is to be managed by the XiO Cloud® service.

> **NOTE:** When a network connection is used, disconnect the direct connect adapter from the UC Engine.

Network Connection

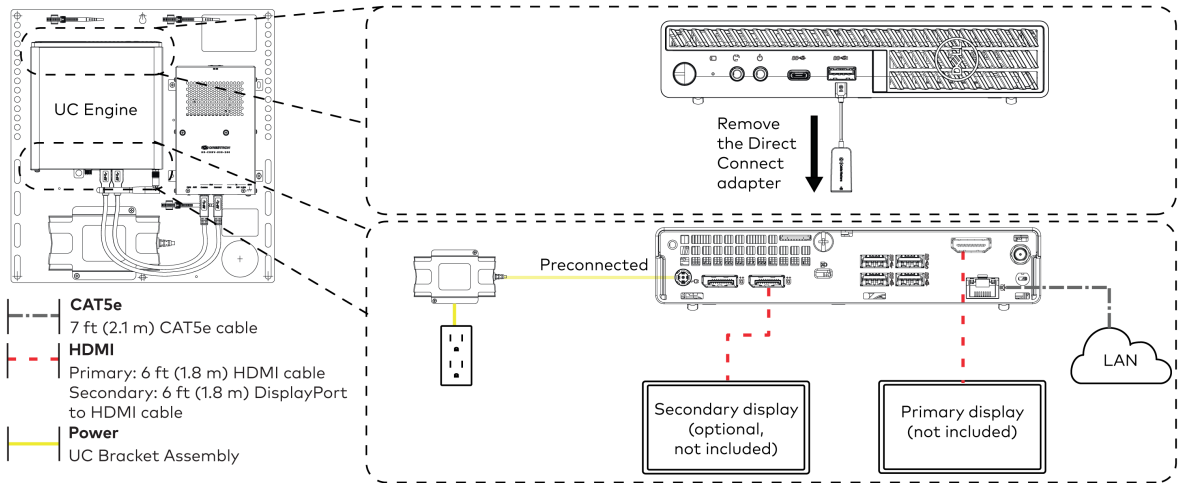

2. Connect the power supply and the soundbar to the bottom of the content ingest device (HD-CONV-USB-260). Connect the power supplies to an AC power outlet.

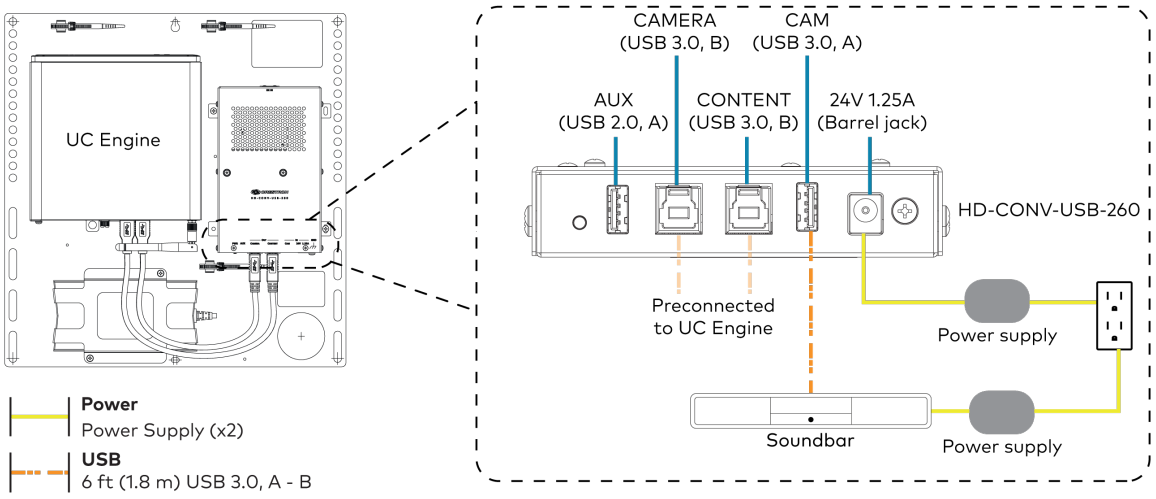

3. Connect power and the content ingest device (HD-CONV-USB-260) to the top of the UC Presentation Transmitter. Connect the UC Engine or LAN to make a direct or network connection as described in step 1.

NOTE: If a longer cable between the UC Presentation Transmitter and the HD-CONV-USB-260 is needed, use a DigitalMedia™ Ultra cable only. The maximum supported cable length is 300 ft (91.4 m).

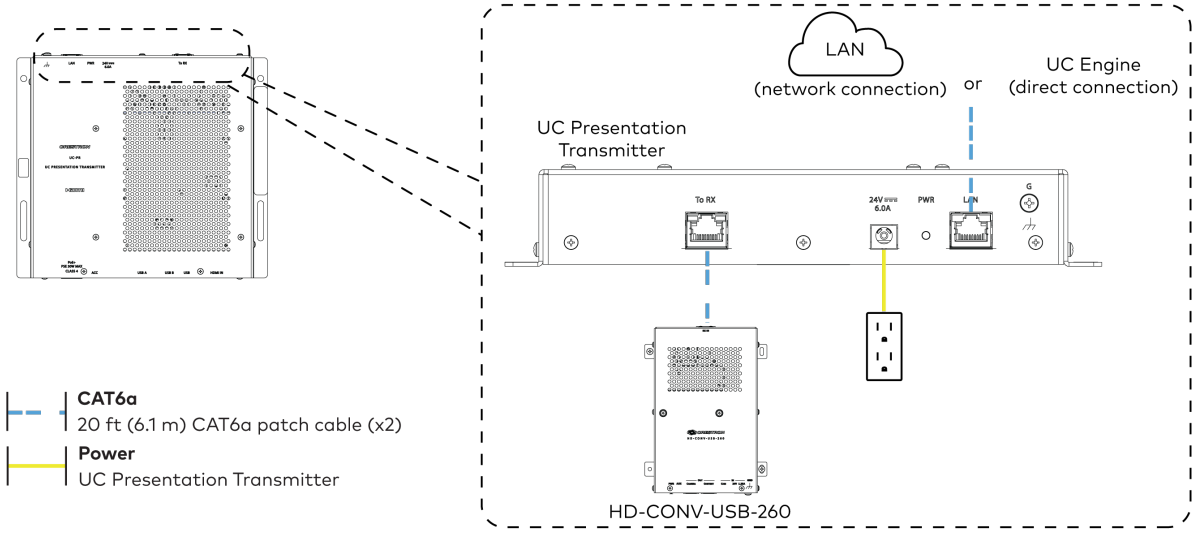

4. Connect the touch screen to the bottom of the UC Presentation Transmitter.

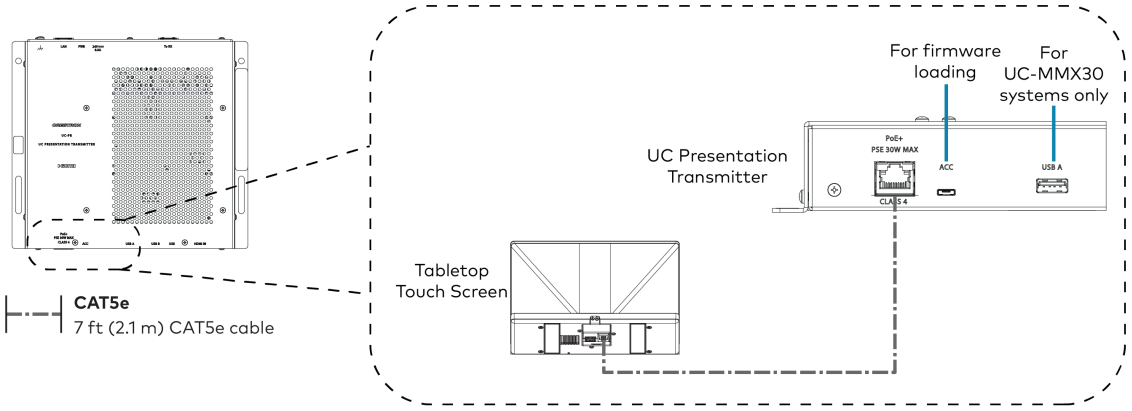

5. Connect a laptop to either the USB port or both the HDMI and USB B ports on the bottom of the UC Presentation Transmitter. Select a connection type based on the available ports on the user's laptop.

   NOTE: If the USB port is used along with either the HDMI or USB B port, the UC Presentation Transmitter will communicate via the USB port by default.

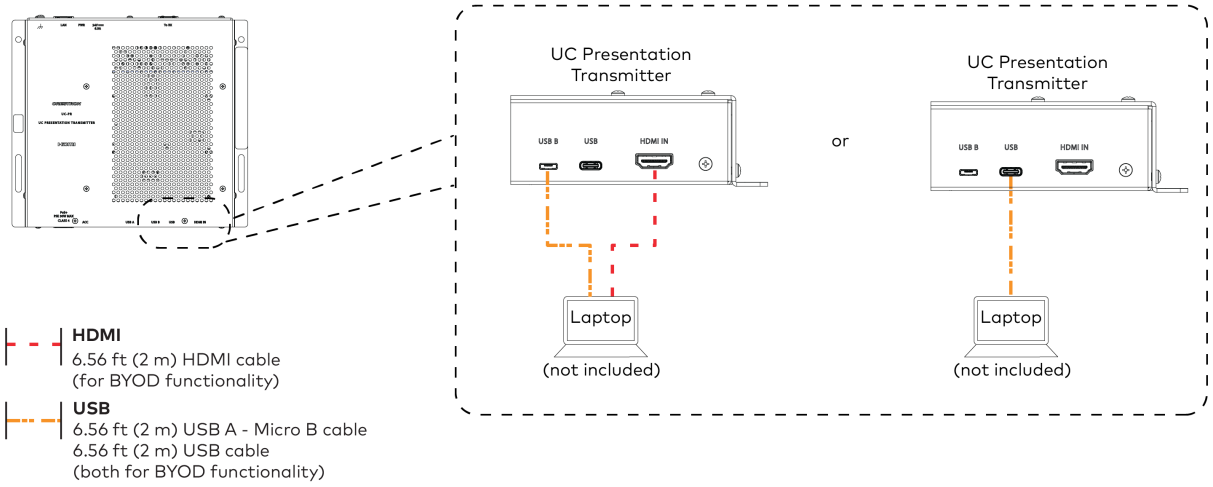

6. Bundle the cables to the bracket assembly with the integrated cable tie wraps. The cable tie wraps are reusable.

Apply Power

Press the power button on the bottom of the UC Engine and apply power to all of the other devices in the system.

Configure the Touch Screen

NOTE: If a direct connection was made during installation, skip to Configure the System on page 140.

1. On a computer, enter the IP address of the touch screen into a web browser. Log in and navigate to **Settings** > **Applications**.

   NOTES:
   - The touch screen (via the PoE injector) and computer must be on the same network switch and VLAN.
   - A login with administrative rights for the touch screen is required.

2. Enter the following information in the appropriate fields:
   - **Teams Video PC Address**: Enter the IP address or hostname of the UC Engine.

     NOTE: The hostname is printed on a label affixed to the UC Engine (mounted on the UC bracket assembly).

   - **Teams Video PC Port**: By default, port number 49500 is used. If a different port number has been configured on the UC Engine, enter that port number instead.
   - **Teams Video Username**: Enter the login username for the UC Engine. (The default username is "admin".)
   - **Teams Video Password**: Enter the login password for the UC Engine. (The default password is "sfb".)
3. Select **Save Changes**.

Configure the System

Use the touch screen and your Microsoft Teams credentials to configure the UC Engine, as described in Configuration on page 296. For detailed information on deploying Microsoft Teams Rooms, refer to the Microsoft Teams Rooms documentation.

UC-B31-T and UC-B31-T-WM

Minimum Requirements

Ensure that the below requirements are met prior to setting up the system.

- A video display (not included) connected to the UC Engine. A second display is optional.
- A Microsoft Teams Rooms provisioned account (not included).

> **NOTE:** Unless otherwise indicated in this section, the connection procedure is the same for UC-B31-T and UC-B31-T-WM.

In The Box

Qty.	Description	UC-B31-T (-INDIA)	UC-B31-T-WM(-INDIA)
	Tabletop Touch Screen		
1	10.1 in. Tabletop Touch Screen (6511748)	✓	✗
1	Grommet, Cable, Closed (2055455)		
1	Grommet, Cable, Open (2055456)		
1	Cover, Cable compartment (2055457)		
	UC Bracket Assembly		
1	UC Bracket Assembly with UC Engine and HDMI content ingest (UC-BRKT-200-S-T-ASSY, 6512689)	✓	✓
2	Anchor, Drywall, Plastic, 3/8 in. x 1/2 in. (9.5 mm x 12.7 mm) (2052565)		
1	Key, Anchor (4529654)		
2	Screw, 8-AB x 1-1/2 in. (38.1 mm), Pan Head, Combo (2052567)		
4	Tie Wrap (2047935)		
	Jabra PanaCast 50 Video Bar		
1	Jabra PanaCast 50 video bar for Crestron Flex systems (6513114) or Jabra PanaCast 50 video bar for Crestron Flex systems, India (6512698)	✓	✓
	Additional Items		
1	PoE injector (6502429)	✓	✓
1	Cable, CAT6a, RJ-45 - RJ-45, 20 ft (6.1 m) (6507640)	✓	✓
2	Cable, CAT5e, RJ-45 - RJ-45, 7 ft (2.1 m) (6509924)	✓	✓
1	Cable, HDMI 2.1, 6 ft (1.8 m) (6512150)	✓	✓
1	Cable, HDMI, 20 ft (6.1 m) (6503567)	✓	✓
1	Cable, DisplayPort to HDMI, 6 ft (1.8 m) (6508282)	✓	✓

Mount Devices

Mount the UC Bracket Assembly

Mount the UC Bracket Assembly to VESA® compliant display devices, a wall, or other building structure. Anchors and screws are supplied for installation on walls with 3/8 in. (9.5 mm) to 3/4 in. (19 mm) thickness.

CAUTION: Preinstalled screws may protrude from the back of the UC Bracket Assembly. Exercise caution when handling the UC Bracket Assembly to avoid scratching or damaging surfaces.

NOTE: The integrated cable tie wraps are reusable. Avoid damaging the cable tie wraps.

Mount the Soundbar with Camera

Mount the included soundbar with camera according to its included documentation.

Identify the UC Bracket Assembly

The UC Bracket Assembly is available in two models. Identify the model included with your Crestron Flex system. Tap or click the corresponding image below to navigate to the appropriate connection instructions.

UC Bracket Assembly with HD-CONV-USB-200

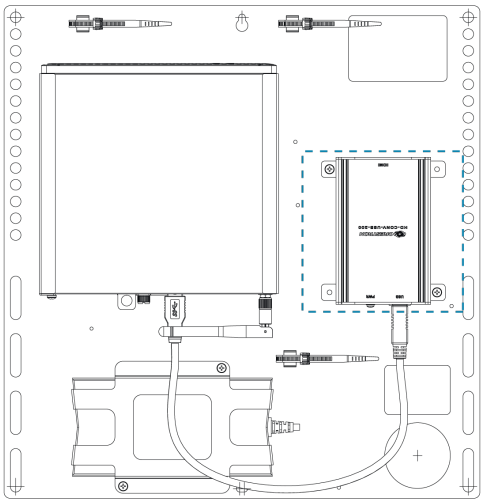

UC Bracket Assembly with HD-CONV-USB-300

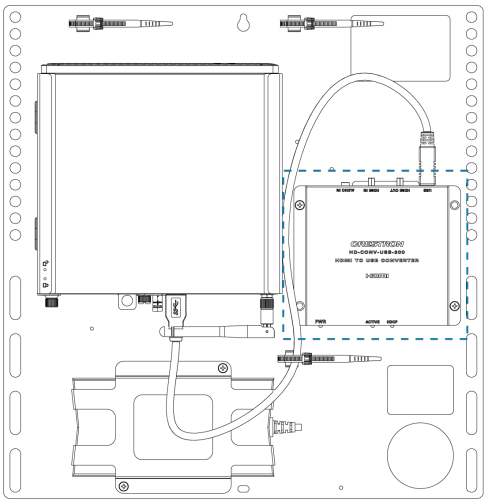

System Overview

For UC Bracket Assembly with HD-CONV-USB-200

When connections are complete, the system appears as shown below. Refer to Make Connections on page 145 for detailed connection instructions.

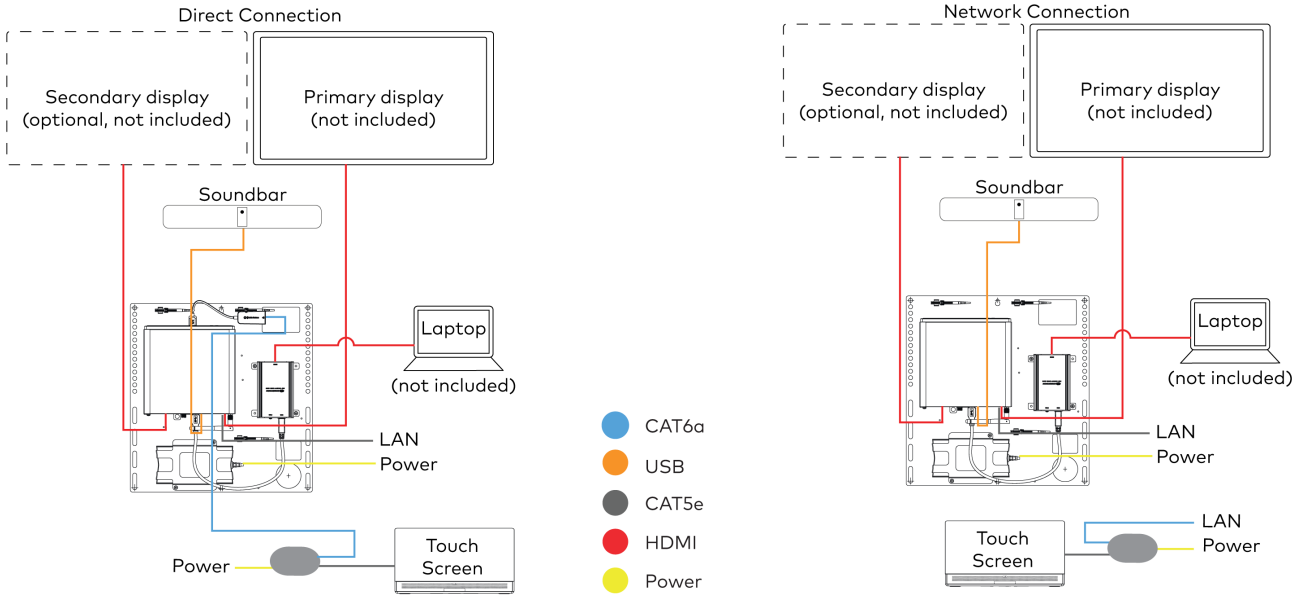

For UC Bracket Assembly with HD-CONV-USB-300

When connections are complete, the system appears as shown below. Refer to Make Connections on page 145 for detailed connection instructions.

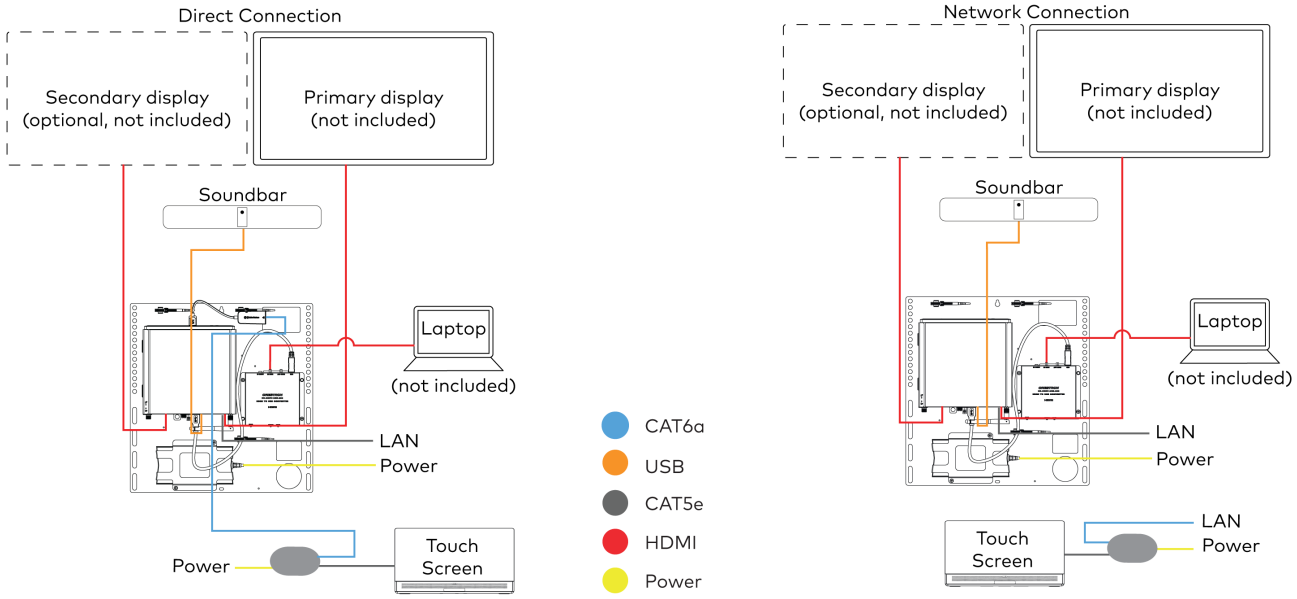

Make Connections

NOTE: For reference, the UC Bracket Assembly is shown with the HD-CONV-USB-200 in the following connection diagrams. Unless otherwise indicated in this guide, the connections remain the same for the UC Bracket Assembly with HD-CONV-USB-200 and HD-CONV-USB-300.

1. Make UC Engine connections as shown in the following illustrations. The touch screen can communicate with the UC Engine over a direct connection or a network connection. Select one of the connection types as described below.
   - Make a direct connection for simple installation and setup. Only use the direct connect adapter to connect the touch screen's PoE injector to the UC Engine. Do not use the direct connect adapter to connect the UC Engine to the network.

     Direct Connection

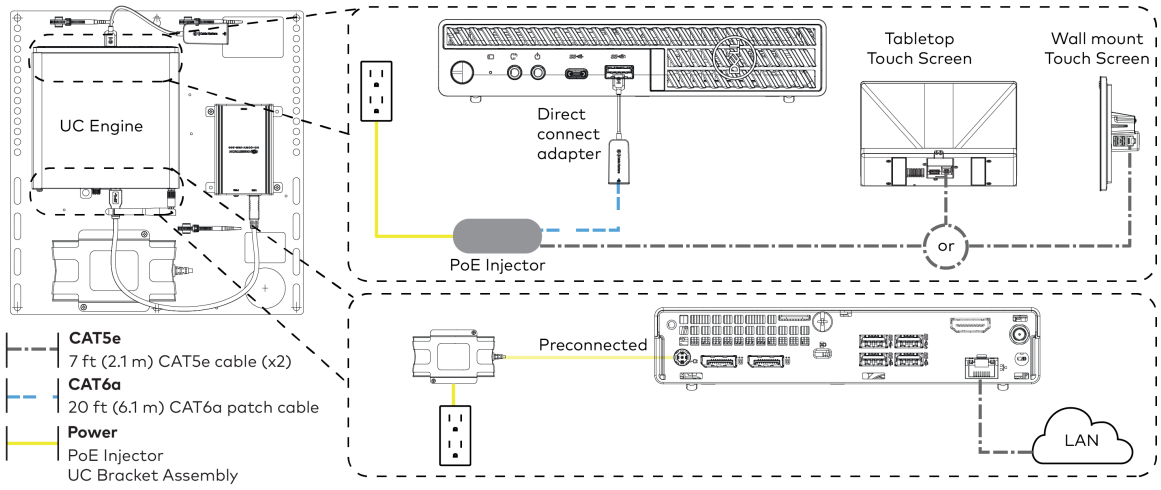

   - Make a network connection if the system is to be managed by the XiO Cloud® service.

     NOTE: When a network connection is used, disconnect the direct connect adapter from the UC Engine.

     Network Connection

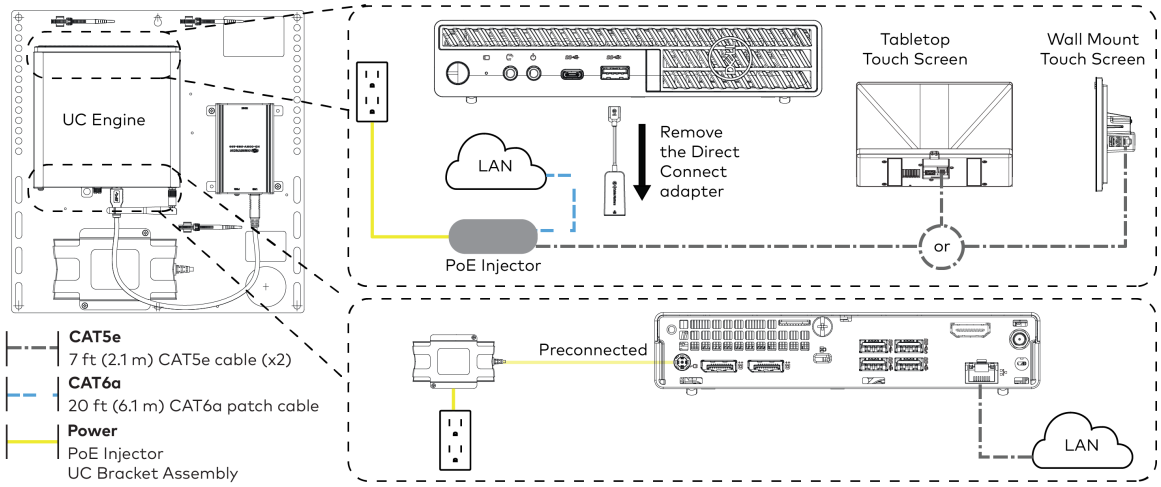

2. Connect displays to the UC Engine.

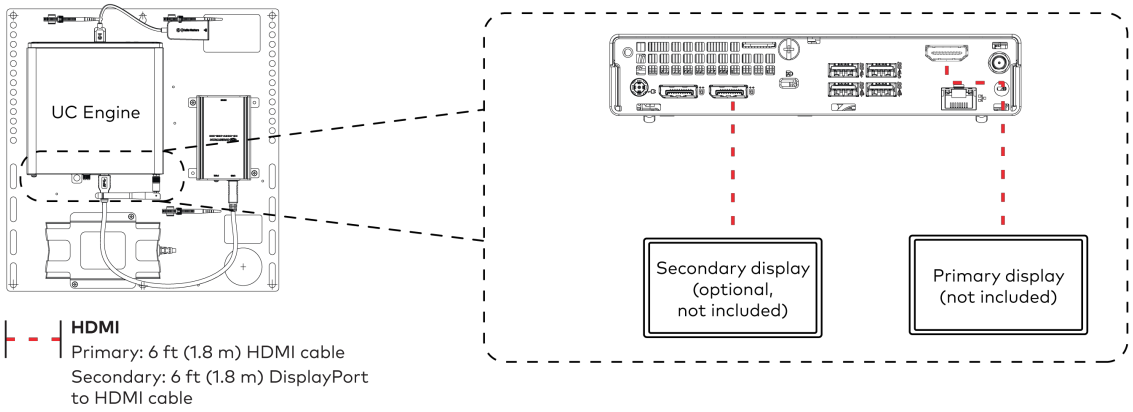

3. Connect the soundbar to the UC Engine as shown in the image below. Do not connect the soundbar to any of the other USB ports.

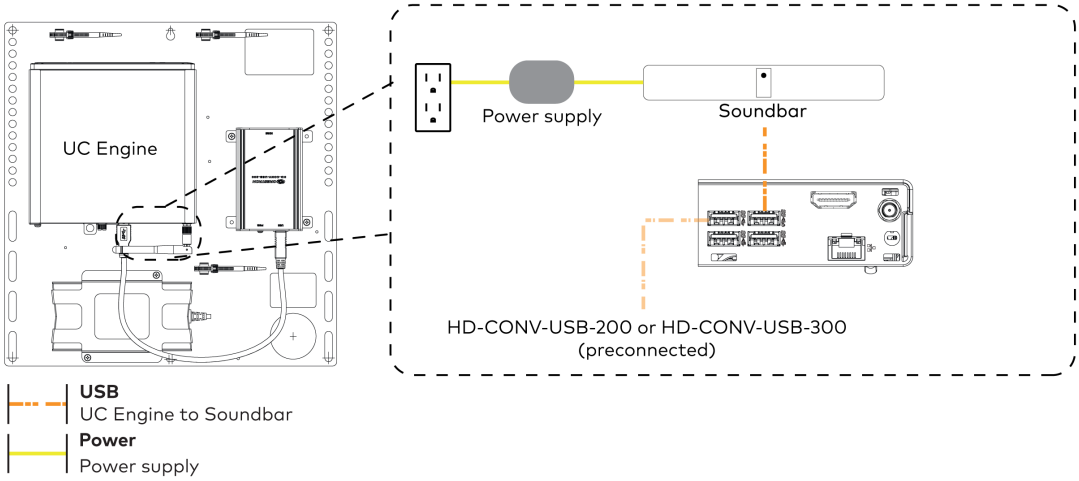

4. Connect a laptop to the HD-CONV-USB-200 or HD-CONV-USB-300.

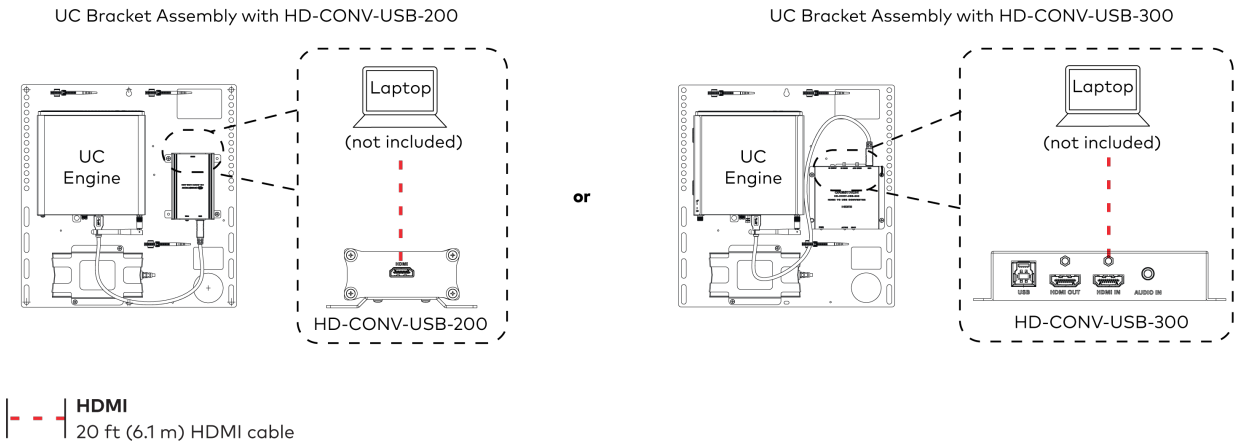

5. Bundle the cables to the bracket assembly with the integrated cable tie wraps. The cable tie wraps are reusable.

Apply Power

Press the power button on the bottom of the UC Engine and apply power to all of the other devices in the system.

Configure the Touch Screen

> **NOTE:** If a direct connection was made during installation, skip to Configure the System on page 147.

1. On a computer, enter the IP address of the touch screen into a web browser. Log in and navigate to **Settings** > **Applications**.

   > **NOTES:**
   > - The touch screen (via the PoE injector) and computer must be on the same network switch and VLAN.
   > - A login with administrative rights for the touch screen is required.

2. Enter the following information in the appropriate fields:
   - **Teams Video PC Address**: Enter the IP address or hostname of the UC Engine.

     > **NOTE:** The hostname is printed on a label affixed to the UC Engine (mounted on the UC bracket assembly).

   - **Teams Video PC Port**: By default, port number 49500 is used. If a different port number has been configured on the UC Engine, enter that port number instead.
   - **Teams Video Username**: Enter the login username for the UC Engine. (The default username is "admin".)
   - **Teams Video Password**: Enter the login password for the UC Engine. (The default password is "sfb".)
3. Select **Save Changes**.

Configure the System

Use the touch screen and your Microsoft Teams credentials to configure the UC Engine, as described in Configuration on page 296. For detailed information on deploying Microsoft Teams Rooms, refer to the Microsoft Teams Rooms documentation.

UC-BX31-T and UC-BX31-T-WM

Minimum Requirements

Ensure that the below requirements are met prior to setting up the system.

- A video display (not included) connected to the UC Engine. A second display is optional.
- A Microsoft Teams Rooms provisioned account (not included).

> **NOTE:** Unless otherwise indicated in this section, the connection procedure is the same for UC-BX31-T and UC-BX31-T-WM.

In The Box

Qty.	Description	UC-BX31-T(-INDIA)	UC-BX31-T-WM(-INDIA)
	Tabletop Touch Screen		
1	10.1 in. Tabletop Touch Screen (6511748)	✓	✗
1	Grommet, Cable, Closed (2055455)		
1	Grommet, Cable, Open (2055456)		
1	Cover, Cable compartment (2055457)		
	Wall Mount Touch Screen		
1	10.1 in. Wall Mount Touch Screen (6511975)	✗	✓
	Mounting hardware		
	UC Bracket Assembly		
1	UC Bracket Assembly with UC Engine and HDMI or AV over CAT5 content ingest (UC-BRKT-260-P-T-ASSY, 6512691)	✓	✓
1	Power pack (2045870)		
2	Anchor, Drywall, Plastic, 3/8 in. x 1/2 in. (9.5 mm x 12.7 mm) (2052565)		
1	Key, Anchor (4529654)		
2	Screw, 8-AB x 1-1/2 in. (38.1 mm), Pan Head, Combo (2052567)		
4	Tie Wrap (2047935)		
	Jabra PanaCast 50 Video Bar		
1	Jabra PanaCast 50 video bar for Crestron Flex systems (6513114) or Jabra PanaCast 50 video bar for Crestron Flex systems, India (6512698)	✓	✓
	UC Presentation Transmitter with Cable Organizer		

Qty.	Description	UC-BX31-T(-INDIA)	UC-BX31-T-WM(-INDIA)
1	Presentation transmitter (6510936)	✓	✓
1	Cable Organizer		
1	Power pack (2056363) with cord (2001134)		
1	Bracket, power supply (2056257)		
1	Cable, USB to USB, 6.56 ft (2 m) (2056116)		
1	Cable, HDMI®, 6.56 ft (2 m) (2056117)		
1	Cable, USB 2.0, A to Micro B, 6.56 ft (2 m) (2055504)		
8	Screw, 10-9 x 5/8 in. (15.9 mm), Pan Head, Phillips, Black (2054365)		
	Additional Items		
2	Cable, CAT6a, RJ-45 - RJ-45, 20 ft (6.1 m) (6507640)	✓	✓
2	Cable, CAT5e, RJ-45 - RJ-45, 7 ft (2.1 m) (6509924)	✓	✓
1	Cable, HDMI 2.1, 6 ft (1.8 m) (6512150)	✓	✓
1	Cable, DisplayPort to HDMI, 6 ft (1.8 m) (6508282)	✓	✓

Mount Devices

Mount the UC Bracket Assembly

Mount the UC Bracket Assembly to VESA® compliant display devices, a wall, or other building structure. Anchors and screws are supplied for installation on walls with 3/8 in. (9.5 mm) to 3/4 in. (19 mm) thickness.

CAUTION: Preinstalled screws may protrude from the back of the UC Bracket Assembly. Exercise caution when handling the UC Bracket Assembly to avoid scratching or damaging surfaces.

NOTE: The integrated cable tie wraps are reusable. Avoid damaging the cable tie wraps.

Mount the UC Presentation Transmitter

Mount the UC Presentation Transmitter to the underside of a table using the supplied screws. The supplied screws support installation on tables with a thickness of 1 in. (25.4 mm) minimum.

Mount the Cable Organizer for the UC-PR

Mount the Cable Organizer according to the Cable Organizer for the UC-PR (Doc. 8966).

Mount the Soundbar with Camera

Mount the included soundbar with camera according to its included documentation.

Mount the Wall-Mount Touch Screen

Mount the included wall-mount touch screen according to the TSW-1070 Product Manual (Doc. 8550).

System Overview

When connections are complete, the system appears as shown below. The laptop connections shown below may vary based on the selected connection method. Refer to Make Connections on page 151 for detailed connection instructions.

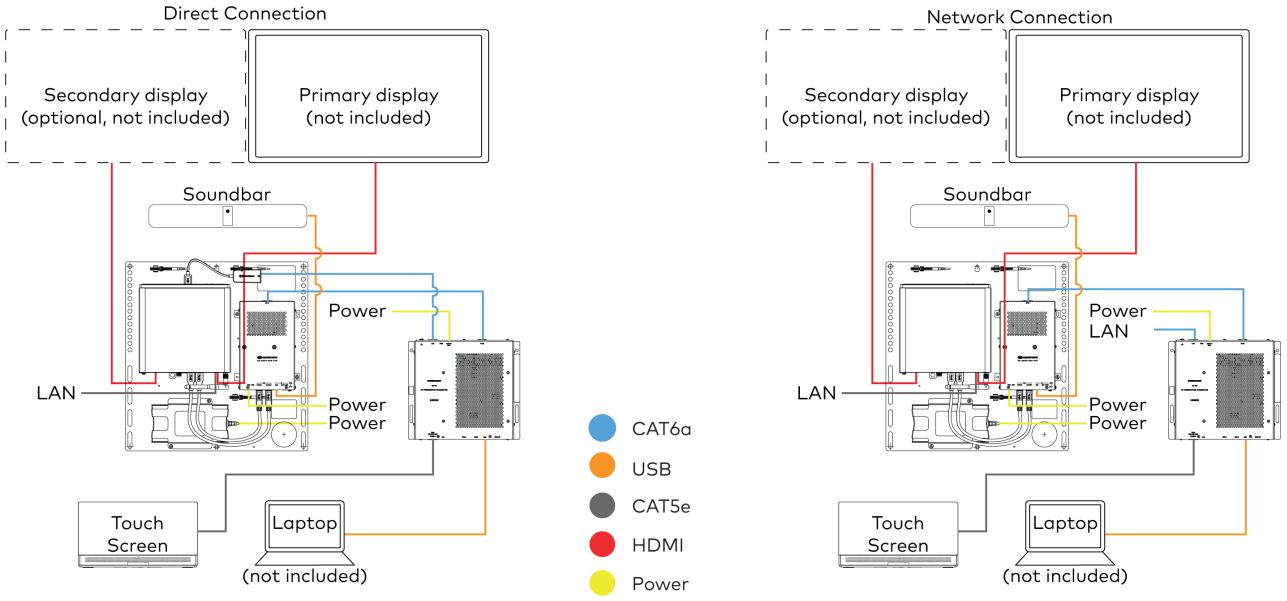

Make Connections

1. Make UC Engine connections as shown in the following illustrations. The UC Presentation Transmitter can communicate with the UC Engine over a direct connection or a network connection. Select one of the connection types as described below.
   - Make a direct connection for simple installation and setup. Only use the direct connect adapter to connect the UC Presentation Transmitter to the UC Engine. Do not use the direct connect adapter to connect the UC Engine to the network.

     Direct Connection

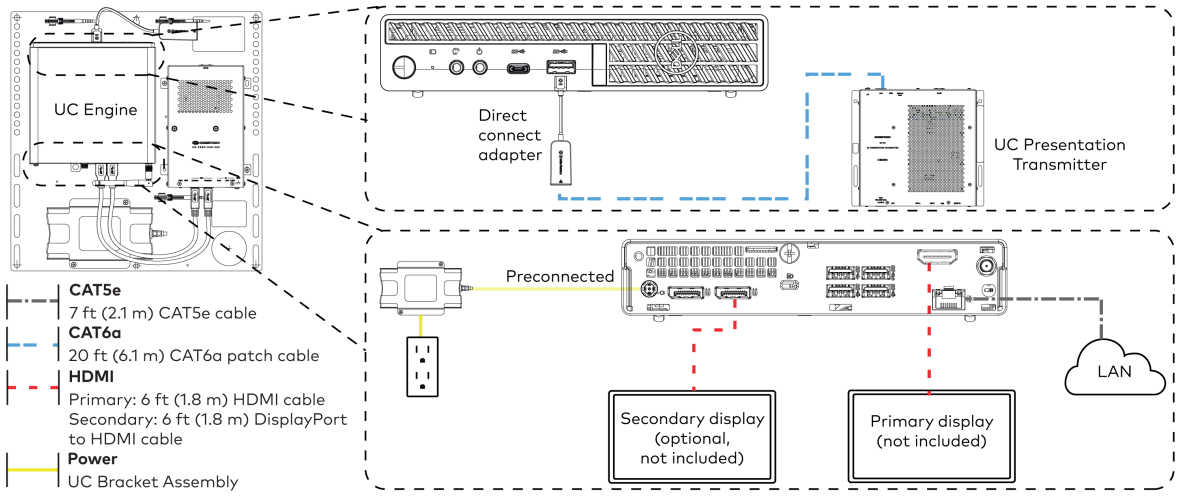

- Make a network connection if the system is to be managed by the XiO Cloud® service.

> **NOTE:** When a network connection is used, disconnect the direct connect adapter from the UC Engine.

Network Connection

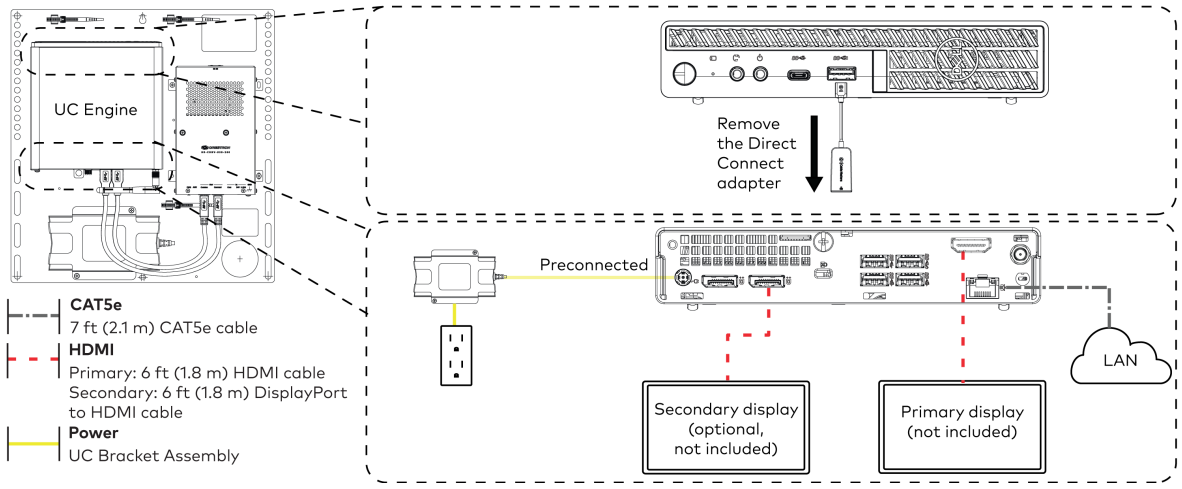

2. Connect the to the bottom of the content ingest device . Connect the power to an AC power outlet.

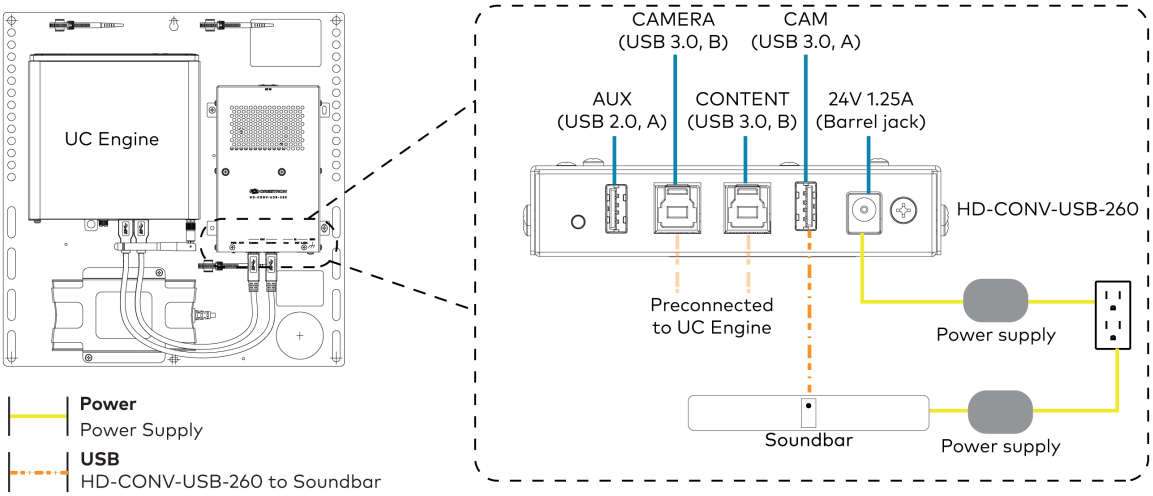

3. Connect power and the content ingest device (HD-CONV-USB-260) to the top of the UC Presentation Transmitter. Connect the UC Engine or LAN to make a direct or network connection as described in step 1.

NOTE: If a longer cable between the UC Presentation Transmitter and the HD-CONV-USB-260 is needed, use a DigitalMedia™ Ultra cable only. The maximum supported cable length is 300 ft (91.4 m).

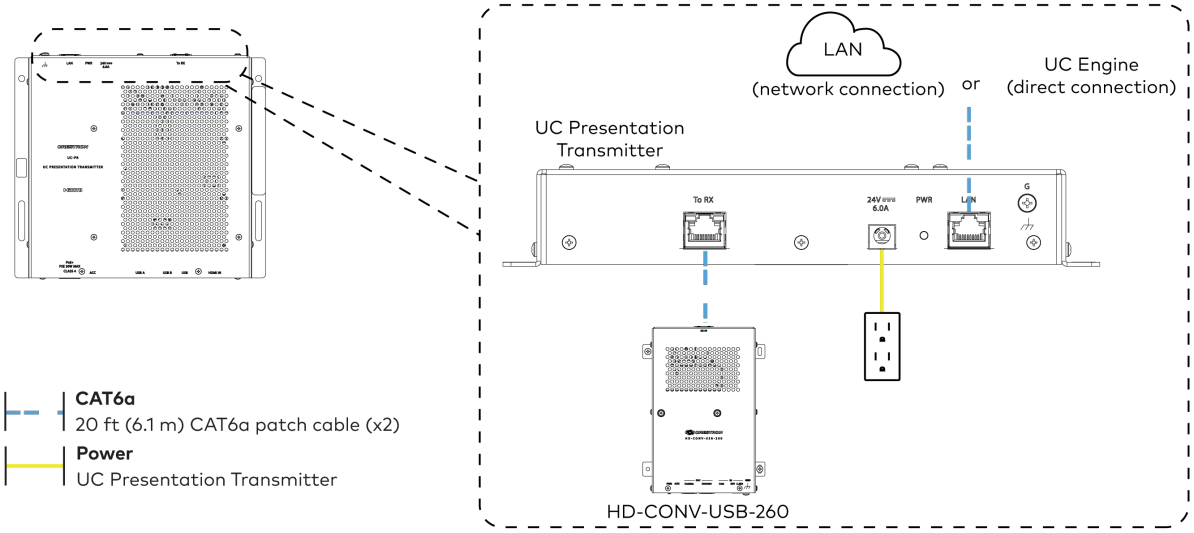

4. Connect the touch screen to the bottom of the UC Presentation Transmitter.

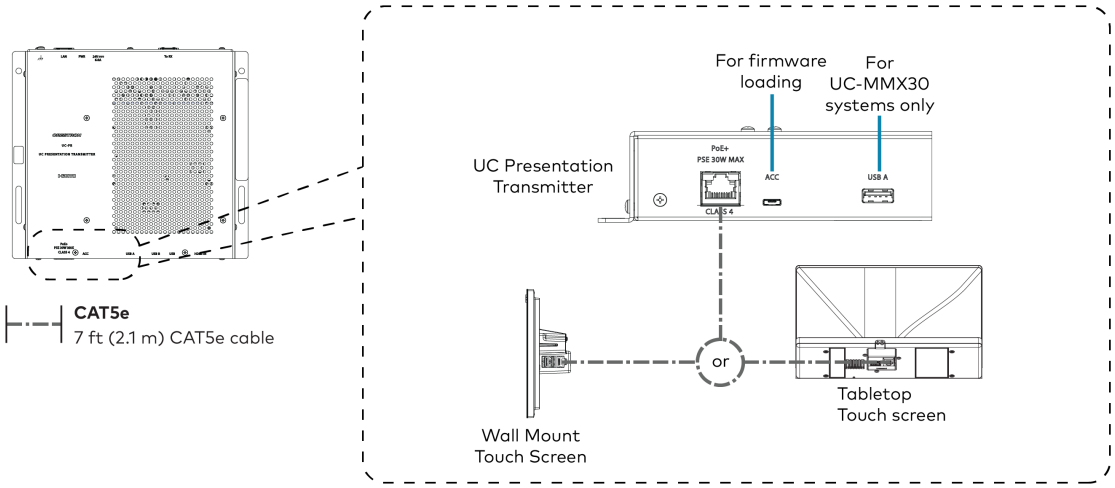

5. Connect a laptop to either the USB port or both the HDMI and USB B ports on the bottom of the UC Presentation Transmitter. Select a connection type based on the available ports on the user's laptop.

> **NOTE:** If the USB port is used along with either the HDMI or USB B port, the UC Presentation Transmitter will communicate via the USB port by default.

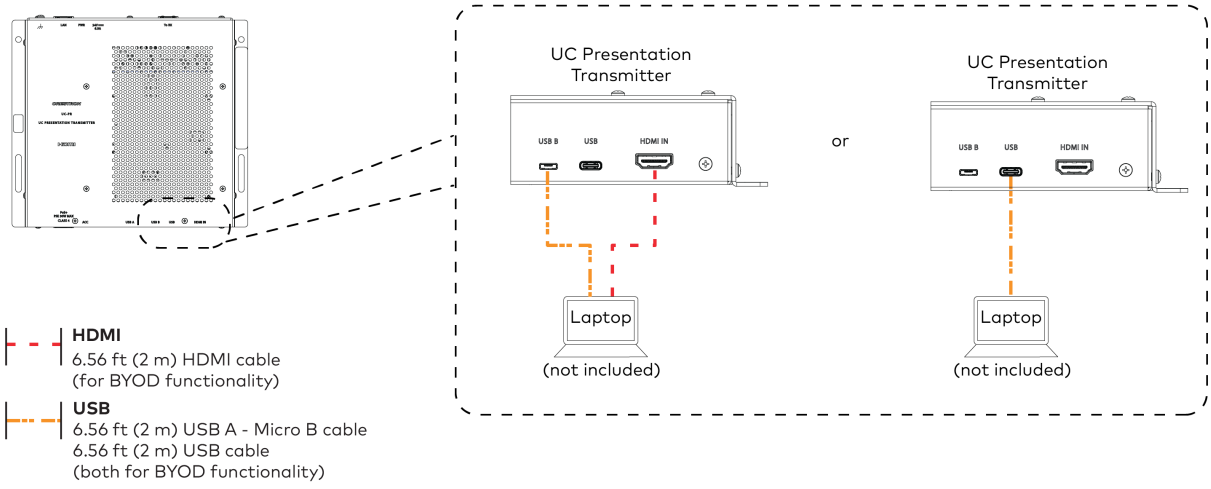

6. Bundle the cables to the bracket assembly with the integrated cable tie wraps. The cable tie wraps are reusable.

Apply Power

Press the power button on the bottom of the UC Engine and apply power to all of the other devices in the system.

Configure the Touch Screen

NOTE: If a direct connection was made during installation, skip to Configure the System on page 155.

1. On a computer, enter the IP address of the touch screen into a web browser. Log in and navigate to **Settings** > **Applications**.

   NOTES:
   - The touch screen (via the PoE injector) and computer must be on the same network switch and VLAN.
   - A login with administrative rights for the touch screen is required.

2. Enter the following information in the appropriate fields:
   - **Teams Video PC Address**: Enter the IP address or hostname of the UC Engine.

     NOTE: The hostname is printed on a label affixed to the UC Engine (mounted on the UC bracket assembly).

   - **Teams Video PC Port**: By default, port number 49500 is used. If a different port number has been configured on the UC Engine, enter that port number instead.
   - **Teams Video Username**: Enter the login username for the UC Engine. (The default username is "admin".)
   - **Teams Video Password**: Enter the login password for the UC Engine. (The default password is "sfb".)
3. Select **Save Changes**.

Configure the System

Use the touch screen and your Microsoft Teams credentials to configure the UC Engine, as described in Configuration on page 296. For detailed information on deploying Microsoft Teams Rooms, refer to the Microsoft Teams Rooms documentation.

UC-C100-T and UC-C100-T-WM

Minimum Requirements

Ensure that the below requirements are met prior to setting up the system.

- A certified USB Camera (not included).
- A certified, AEC-enabled USB speakerphone or DSP device (not included).
- A video display (not included) connected to the UC Engine. A second display is optional.
- A Microsoft Teams Rooms provisioned account (not included).

> **NOTE:** Unless otherwise indicated in this section, the connection procedure is the same for UC-C100-T and UC-C100-T-WM.

In The Box

Qty.	Description	UC-C100-T	UC-C100-T-WM
	Tabletop Touch Screen		
1	10.1 in. Tabletop Touch Screen (6511748)	✓	✗
1	Grommet, Cable, Closed (2055455)		
1	Grommet, Cable, Open (2055456)		
1	Cover, Cable compartment (2055457)		
	Wall Mount Touch Screen		
1	10.1 in. Wall Mount Touch Screen (6511975)	✗	✓
	Mounting hardware		
	UC Bracket Assembly		
1	UC Bracket Assembly with UC Engine and HDMI content ingest (UC-BRKT-200-S-T-ASSY, 6512689)	✓	✓
2	Anchor, Drywall, Plastic, 3/8 in. x 1/2 in. (9.5 mm x 12.7 mm) (2052565)		
1	Key, Anchor (4529654)		
2	Screw, 8-AB x 1-1/2 in. (38.1 mm), Pan Head, Combo (2052567)		
4	Tie Wrap (2047935)		
	Additional Items		
1	PoE injector (6502429)	✓	✓
1	Cable, CAT6a, RJ-45 - RJ-45, 20 ft (6.1 m) (6507640)	✓	✓
2	Cable, CAT5e, RJ-45 - RJ-45, 7 ft (2.1 m) (6509924)	✓	✓
1	Cable, HDMI 2.1, 6 ft (1.8 m) (6512150)	✓	✓
1	Cable, HDMI, 20 ft (6.1 m) (6503567)	✓	✓
1	Cable, DisplayPort to HDMI, 6 ft (1.8 m) (6508282)	✓	✓

Mount Devices

Mount the UC Bracket Assembly

Mount the UC Bracket Assembly to VESA® compliant display devices, a wall, or other building structure. Anchors and screws are supplied for installation on walls with 3/8 in. (9.5 mm) to 3/4 in. (19 mm) thickness.

CAUTION: Preinstalled screws may protrude from the back of the UC Bracket Assembly. Exercise caution when handling the UC Bracket Assembly to avoid scratching or damaging surfaces.

NOTE: The integrated cable tie wraps are reusable. Avoid damaging the cable tie wraps.

Mount the Wall-Mount Touch Screen

Mount the included wall-mount touch screen according to the TSW-1070 Product Manual (Doc. 8550).

Identify the UC Bracket Assembly

The UC Bracket Assembly is available in two models. Identify the model included with your Crestron Flex system. Tap or click the corresponding image below to navigate to the appropriate connection instructions.

UC Bracket Assembly with HD-CONV-USB-200

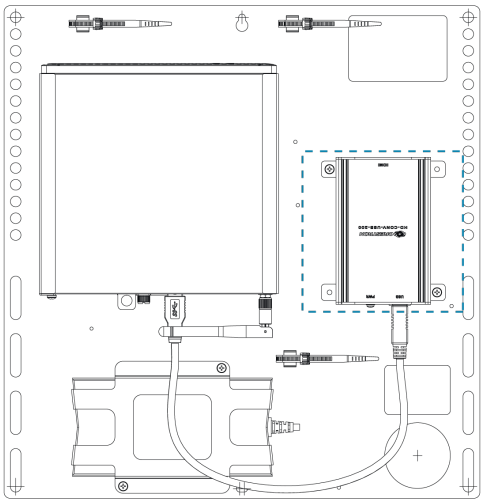

UC Bracket Assembly with HD-CONV-USB-300

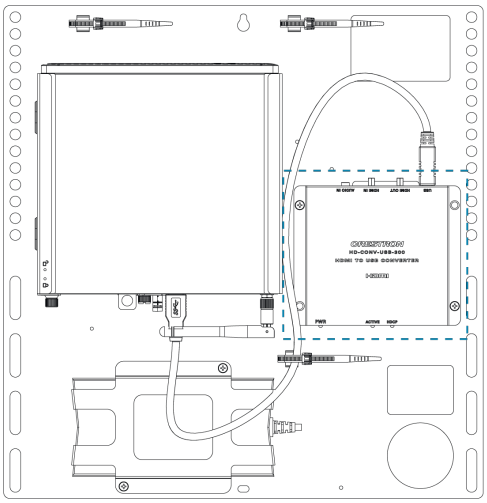

System Overview

For UC Bracket Assembly with HD-CONV-USB-200

When connections are complete, the system appears as shown below. Refer to Make Connections on page 160 for detailed connection instructions.

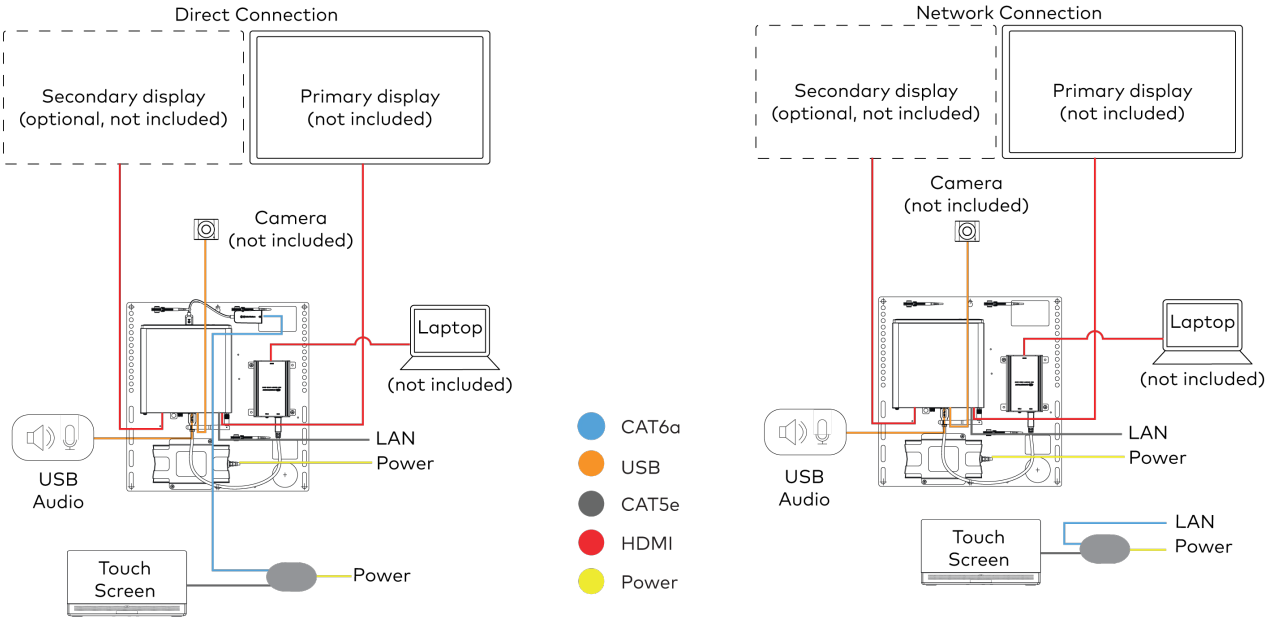

For UC Bracket Assembly with HD-CONV-USB-300

When connections are complete, the system appears as shown below. Refer to Make Connections on page 160 for detailed connection instructions.

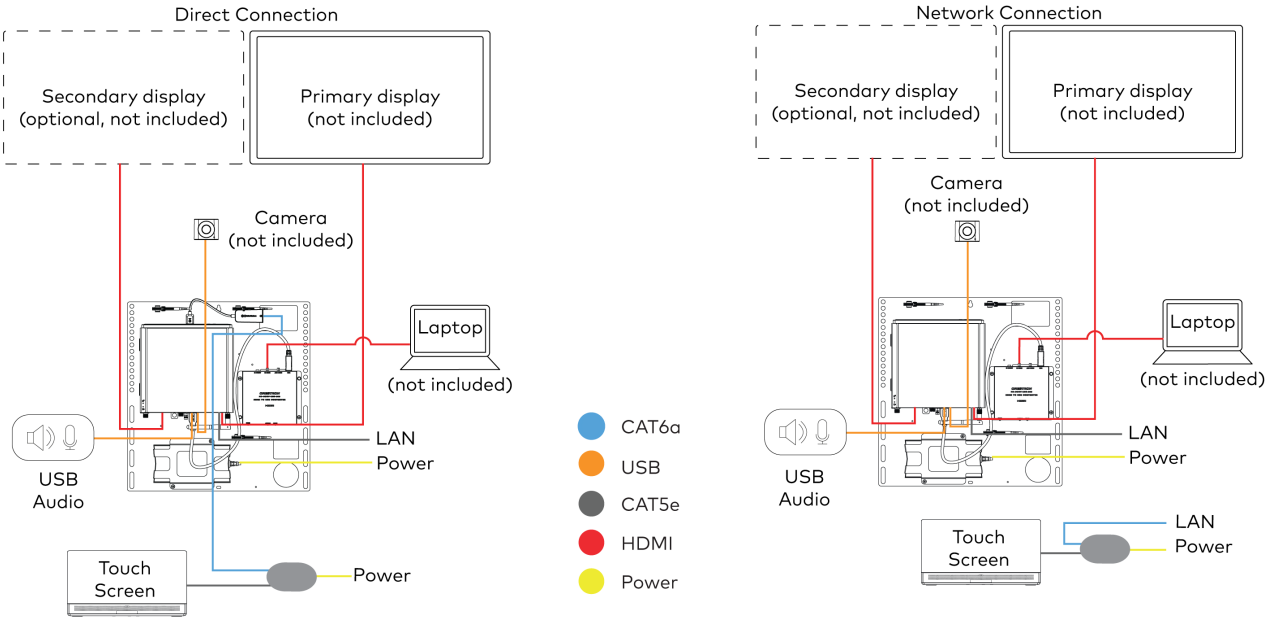

Make Connections

NOTE: For reference, the UC Bracket Assembly is shown with the HD-CONV-USB-200 in the following connection diagrams. Unless otherwise indicated in this guide, the connections remain the same for the UC Bracket Assembly with HD-CONV-USB-200 and HD-CONV-USB-300.

1. Make UC Engine connections as shown in the following illustrations. The touch screen can communicate with the UC Engine over a direct connection or a network connection. Select one of the connection types as described below.
   - Make a direct connection for simple installation and setup. Only use the direct connect adapter to connect the touch screen's PoE injector to the UC Engine. Do not use the direct connect adapter to connect the UC Engine to the network.

     Direct Connection

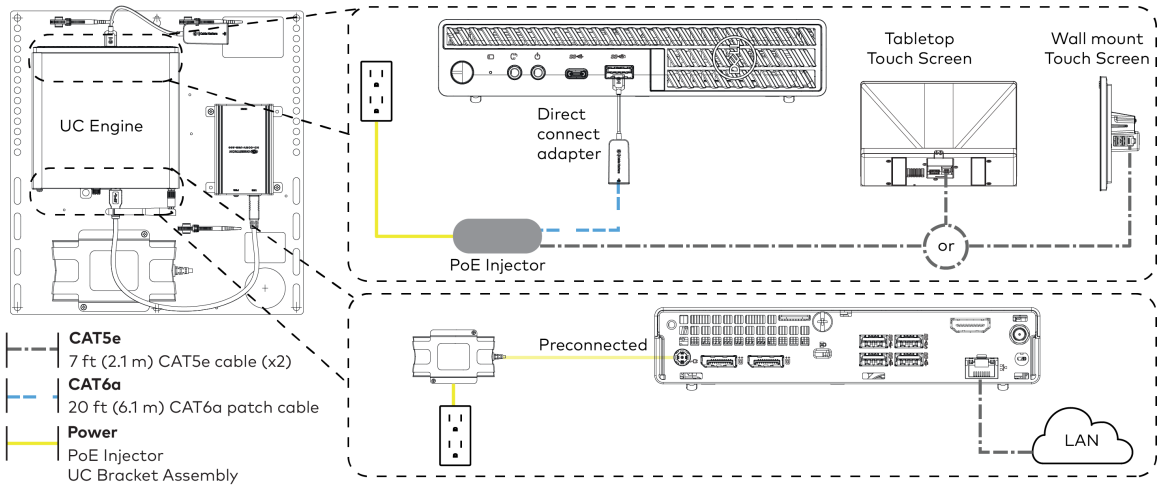

   - Make a network connection if the system is to be managed by the XiO Cloud® service.

     NOTE: When a network connection is used, disconnect the direct connect adapter from the UC Engine.

     Network Connection

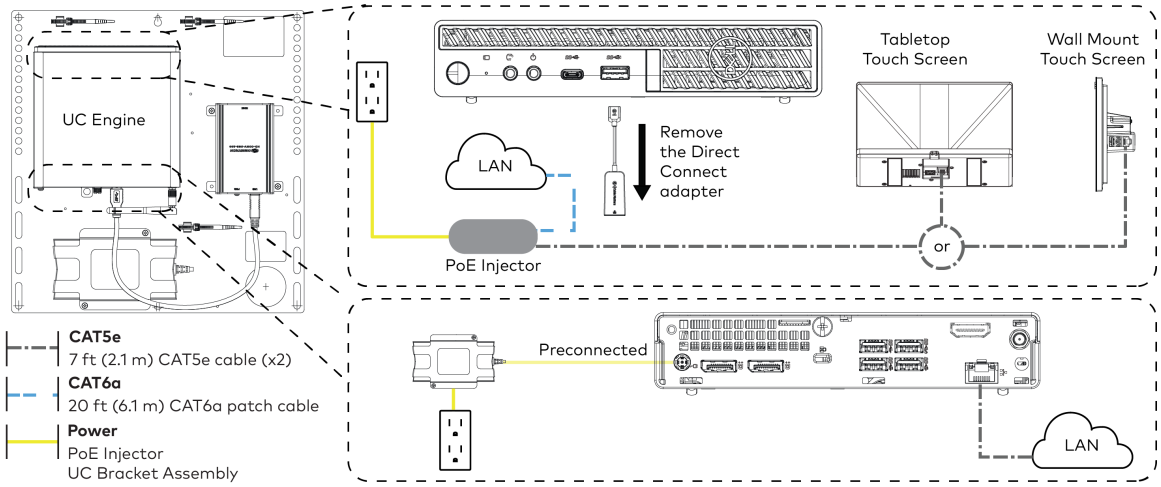

2. Connect a USB audio source (accessory, not included) and displays to the UC Engine.

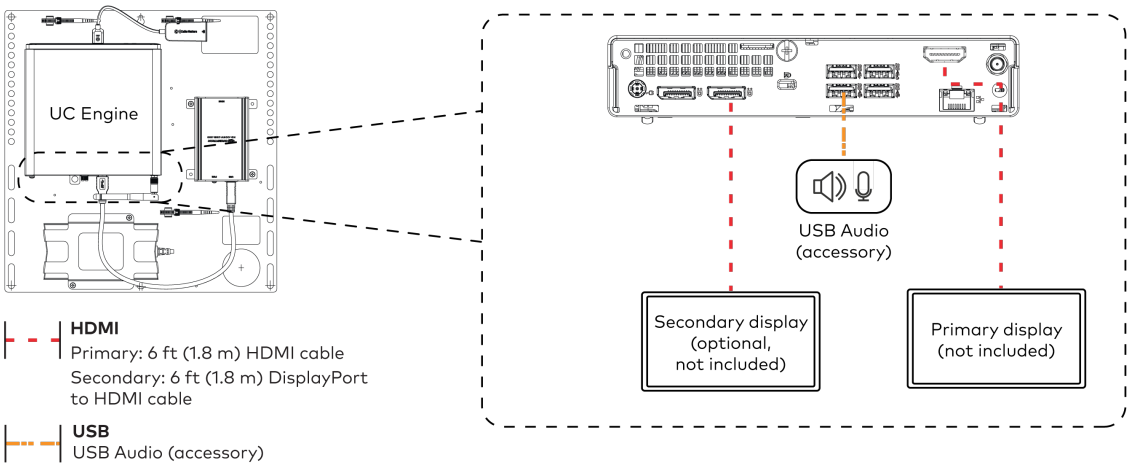

3. Connect a camera (not included) to the UC Engine as shown in the image below. Do not connect the camera to any of the other USB ports.

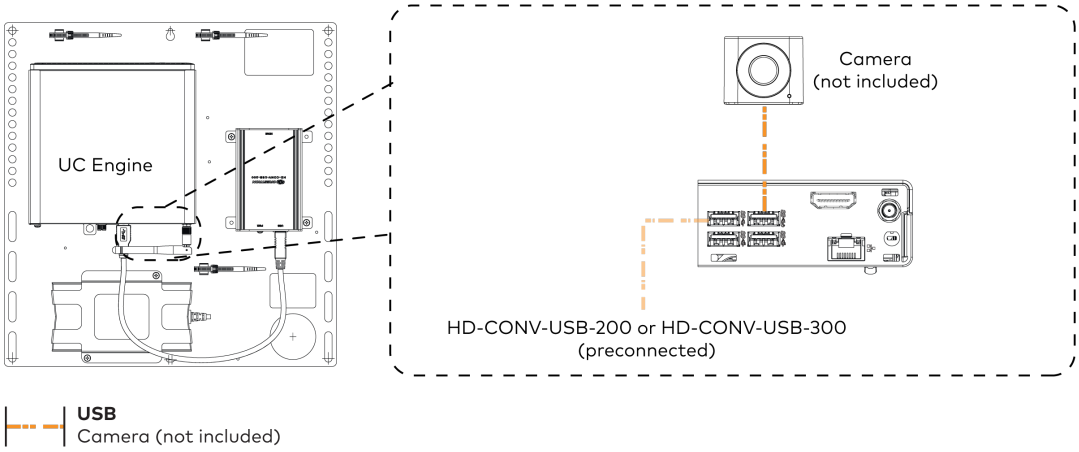

4. Connect a laptop to the HD-CONV-USB-200 or HD-CONV-USB-300.

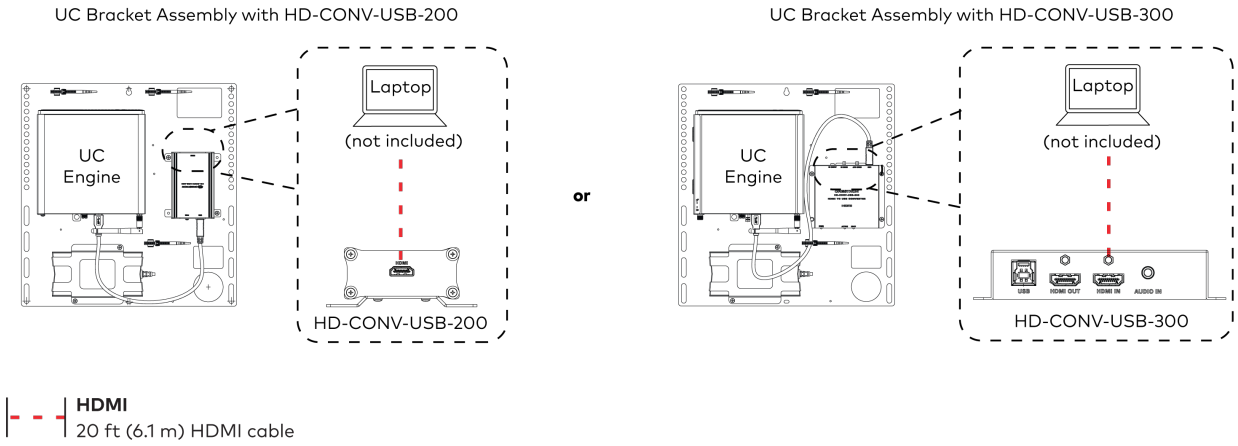

5. Bundle the cables to the bracket assembly with the integrated cable tie wraps. The cable tie wraps are reusable.

Apply Power

Press the power button on the bottom of the UC Engine and apply power to all of the other devices in the system.

Configure the Touch Screen

> **NOTE:** If a direct connection was made during installation, skip to Configure the System on page 163.

1. On a computer, enter the IP address of the touch screen into a web browser. Log in and navigate to **Settings** > **Applications**.

   > **NOTES:**
   >
   > - The touch screen (via the PoE injector) and computer must be on the same network switch and VLAN.
   > - A login with administrative rights for the touch screen is required.

2. Enter the following information in the appropriate fields:
    - **Teams Video PC Address**: Enter the IP address or hostname of the UC Engine.

      > **NOTE:** The hostname is printed on a label affixed to the UC Engine (mounted on the UC bracket assembly).

    - **Teams Video PC Port**: By default, port number 49500 is used. If a different port number has been configured on the UC Engine, enter that port number instead.
    - **Teams Video Username**: Enter the login username for the UC Engine. (The default username is "admin".)
    - **Teams Video Password**: Enter the login password for the UC Engine. (The default password is "sfb".)
3. Select **Save Changes**.

Configure the System

Use the touch screen and your Microsoft Teams credentials to configure the UC Engine, as described in Configuration on page 296. For detailed information on deploying Microsoft Teams Rooms, refer to the Microsoft Teams Rooms documentation.

UC-CX100-T and UC-CX100-T-WM

Minimum Requirements

Ensure that the below requirements are met prior to setting up the system.

- A certified USB Camera (not included).
- A certified, AEC-enabled USB speakerphone or DSP device (not included).
- A video display (not included) connected to the UC Engine. A second display is optional.
- A Microsoft Teams Rooms provisioned account (not included).

> **NOTE:** Unless otherwise indicated in this section, the connection procedure is the same for UC-CX100-T and UC-CX100-T-WM.

In The Box

Qty.	Description	UC-CX100-T	UC-CX100-T-WM
	Tabletop Touch Screen		
1	10.1 in. Tabletop Touch Screen (6511748)	✓	✗
1	Grommet, Cable, Closed (2055455)		
1	Grommet, Cable, Open (2055456)		
1	Cover, Cable compartment (2055457)		
	Wall Mount Touch Screen		
1	10.1 in. Wall Mount Touch Screen (6511975)	✗	✓
	Mounting hardware		
	UC Bracket Assembly		
1	UC Bracket Assembly with UC Engine and HDMI or AV over CAT5 content ingest (UC-BRKT-260-P-T-ASSY, 6512691)	✓	✓
1	Power pack (2045870)		
2	Anchor, Drywall, Plastic, 3/8 in. x 1/2 in. (9.5 mm x 12.7 mm) (2052565)		
1	Key, Anchor (4529654)		
2	Screw, 8-AB x 1-1/2 in. (38.1 mm), Pan Head, Combo (2052567)		
4	Tie Wrap (2047935)		
	UC Presentation Transmitter with Cable Organizer		
1	Presentation transmitter (6510936)	✓	✓
1	Cable Organizer		
1	Power pack (2056363) with cord (2001134)		
1	Bracket, power supply (2056257)		
1	Cable, USB to USB, 6.56 ft (2 m) (2056116)		
1	Cable, HDMI®, 6.56 ft (2 m) (2056117)		
1	Cable, USB 2.0, A to Micro B, 6.56 ft (2 m) (2055504)		
8	Screw, 10-9 x 5/8 in. (15.9 mm), Pan Head, Phillips, Black (2054365)		
	Additional Items		
2	Cable, CAT6a, RJ-45 - RJ-45, 20 ft (6.1 m) (6507640)	✓	✓

Qty.	Description	UC-CX100-T	UC-CX100-T-WM
2	Cable, CAT5e, RJ-45 - RJ-45, 7 ft (2.1 m) (6509924)	✔	✔
1	Cable, HDMI 2.1, 6 ft (1.8 m) (6512150)	✔	✔
1	Cable, DisplayPort to HDMI, 6 ft (1.8 m) (6508282)	✔	✔

Mount Devices

Mount the UC Bracket Assembly

Mount the UC Bracket Assembly to VESA® compliant display devices, a wall, or other building structure. Anchors and screws are supplied for installation on walls with 3/8 in. (9.5 mm) to 3/4 in. (19 mm) thickness.

CAUTION: Preinstalled screws may protrude from the back of the UC Bracket Assembly. Exercise caution when handling the UC Bracket Assembly to avoid scratching or damaging surfaces.

NOTE: The integrated cable tie wraps are reusable. Avoid damaging the cable tie wraps.

Mount the UC Presentation Transmitter

Mount the UC Presentation Transmitter to the underside of a table using the supplied screws. The supplied screws support installation on tables with a thickness of 1 in. (25.4 mm) minimum.

Mount the Cable Organizer for the UC-PR

Mount the Cable Organizer according to the Cable Organizer for the UC-PR (Doc. 8966).

Mount the Wall-Mount Touch Screen

Mount the included wall-mount touch screen according to the TSW-1070 Product Manual (Doc. 8550).

System Overview

When connections are complete, the system appears as shown below. The laptop connections shown below may vary based on the selected connection method. Refer to Make Connections on page 167 for detailed connection instructions.

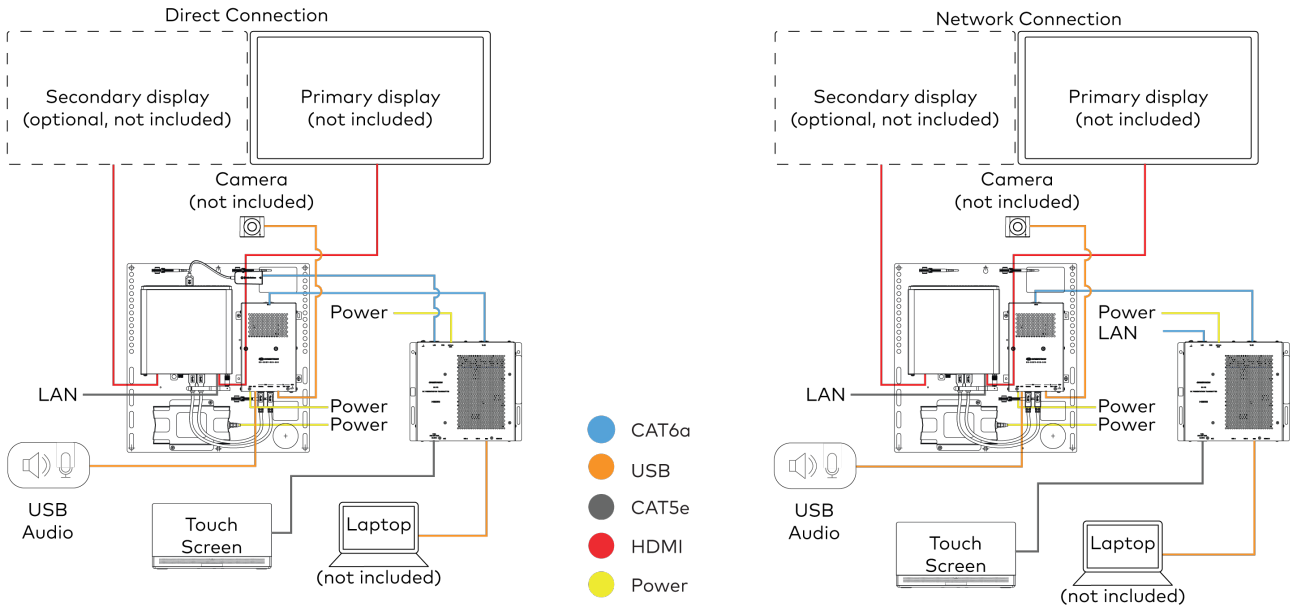

Make Connections

1. Make UC Engine connections as shown in the following illustrations. The UC Presentation Transmitter can communicate with the UC Engine over a direct connection or a network connection. Select one of the connection types as described below.
   - Make a direct connection for simple installation and setup. Only use the direct connect adapter to connect the UC Presentation Transmitter to the UC Engine. Do not use the direct connect adapter to connect the UC Engine to the network.

     Direct Connection

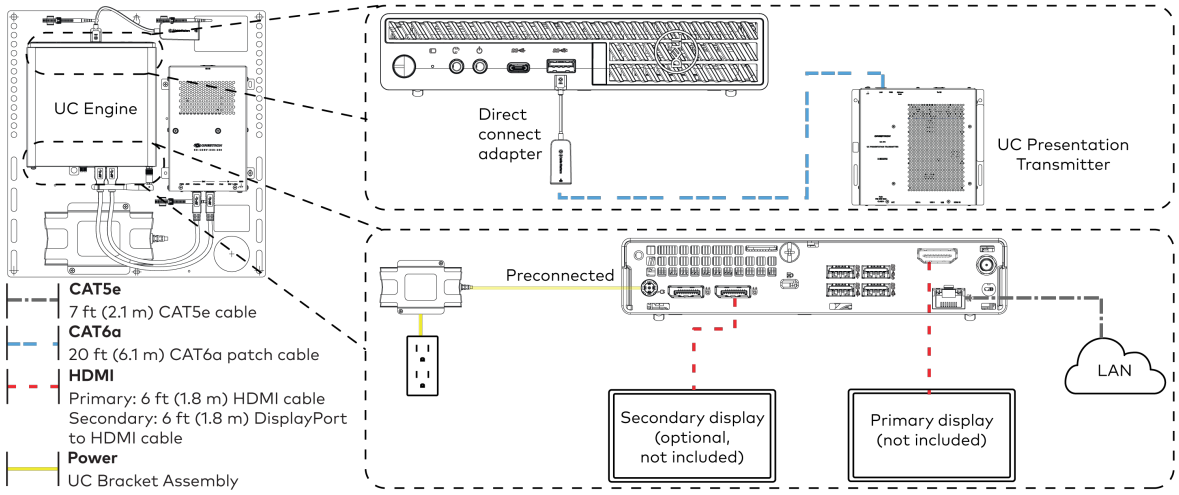

- Make a network connection if the system is to be managed by the XiO Cloud® service.

> **NOTE:** When a network connection is used, disconnect the direct connect adapter from the UC Engine.

Network Connection

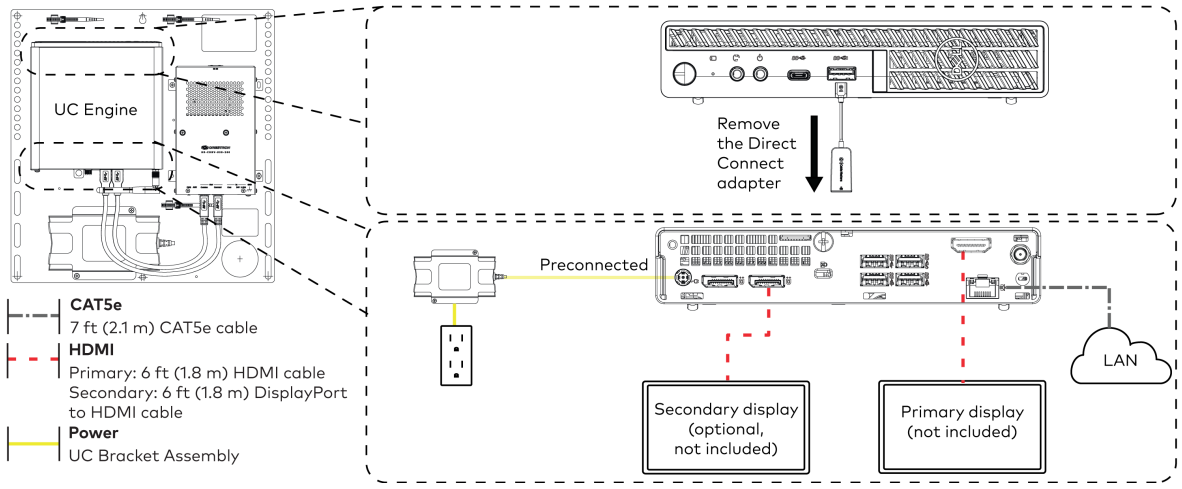

2. Connect the power supply, USB audio (accessory, not included), and a camera (not included) to the bottom of the content ingest device (HD-CONV-USB-260). Connect the power supply to an AC power outlet.

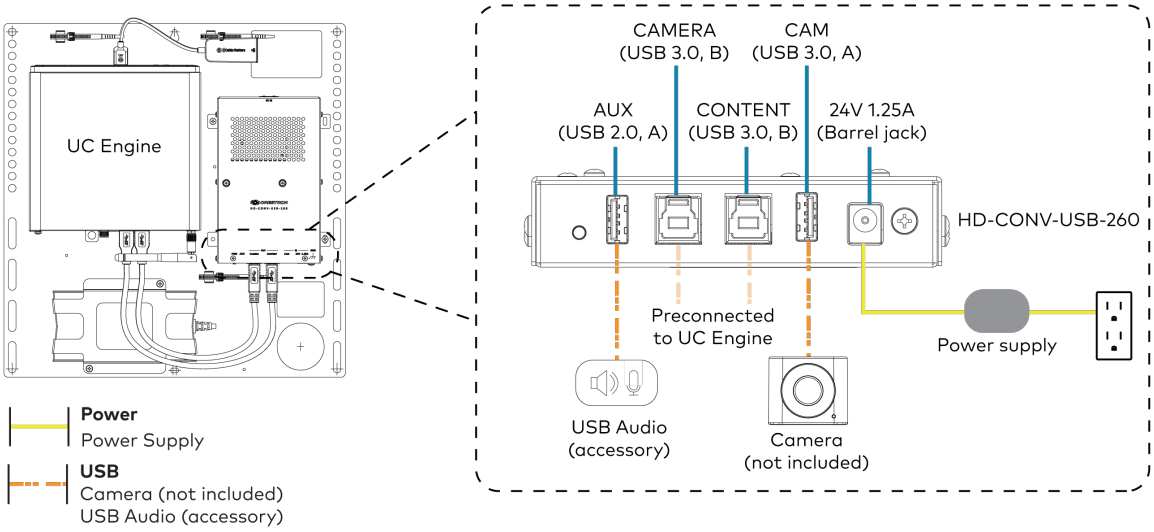

3. Connect power and the content ingest device (HD-CONV-USB-260) to the top of the UC Presentation Transmitter. Connect the UC Engine or LAN to make a direct or network connection as described in step 1.

NOTE: If a longer cable between the UC Presentation Transmitter and the HD-CONV-USB-260 is needed, use a DigitalMedia™ Ultra cable only. The maximum supported cable length is 300 ft (91.4 m).

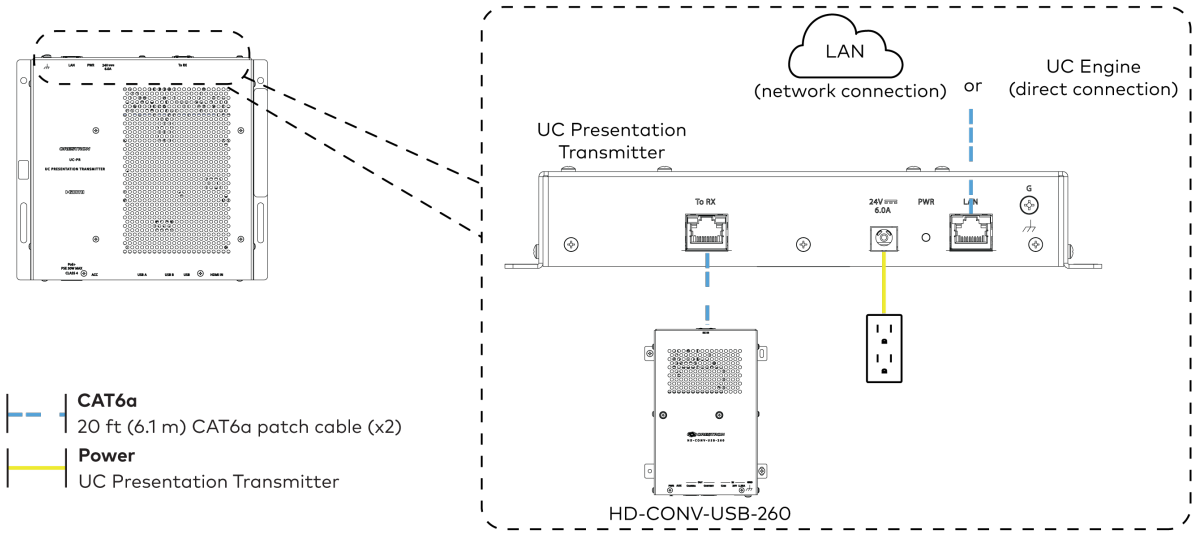

4. Connect the touch screen to the bottom of the UC Presentation Transmitter.

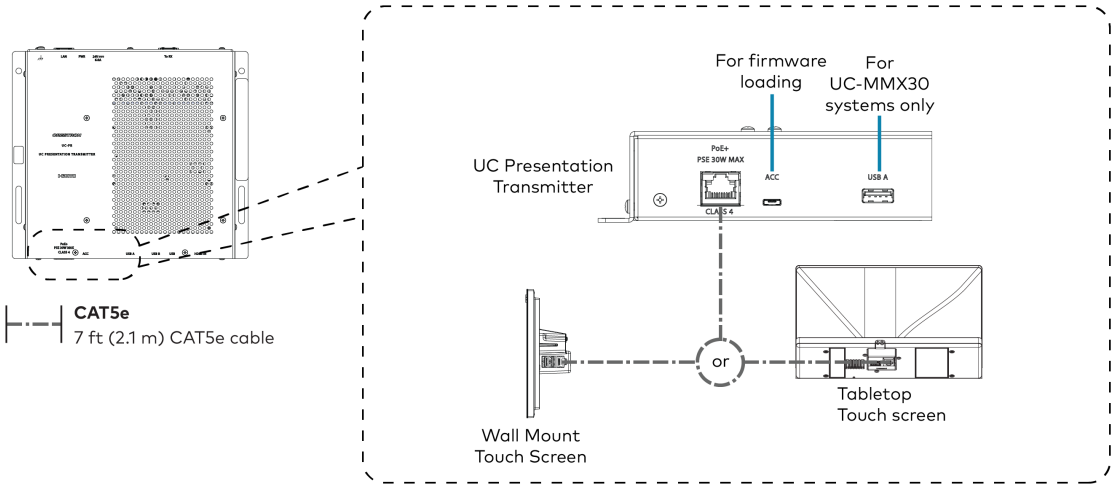

5. Connect a laptop to either the USB port or both the HDMI and USB B ports on the bottom of the UC Presentation Transmitter. Select a connection type based on the available ports on the user's laptop.

> **NOTE:** If the USB port is used along with either the HDMI or USB B port, the UC Presentation Transmitter will communicate via the USB port by default.

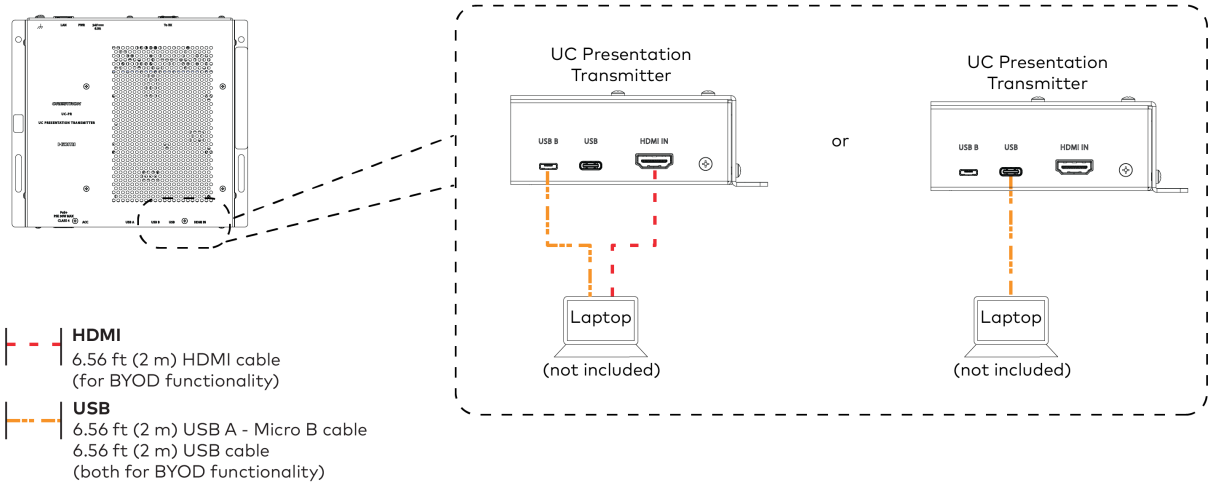

6. Bundle the cables to the bracket assembly with the integrated cable tie wraps. The cable tie wraps are reusable.

Apply Power

Press the power button on the bottom of the UC Engine and apply power to all of the other devices in the system.

Configure the Touch Screen

NOTE: If a direct connection was made during installation, skip to Configure the System on page 171.

1. On a computer, enter the IP address of the touch screen into a web browser. Log in and navigate to **Settings** > **Applications**.

   NOTES:
   - The touch screen (via the PoE injector) and computer must be on the same network switch and VLAN.
   - A login with administrative rights for the touch screen is required.

2. Enter the following information in the appropriate fields:
   - **Teams Video PC Address**: Enter the IP address or hostname of the UC Engine.

     NOTE: The hostname is printed on a label affixed to the UC Engine (mounted on the UC bracket assembly).

   - **Teams Video PC Port**: By default, port number 49500 is used. If a different port number has been configured on the UC Engine, enter that port number instead.
   - **Teams Video Username**: Enter the login username for the UC Engine. (The default username is "admin".)
   - **Teams Video Password**: Enter the login password for the UC Engine. (The default password is "sfb".)
3. Select **Save Changes**.

Configure the System

Use the touch screen and your Microsoft Teams credentials to configure the UC Engine, as described in Configuration on page 296. For detailed information on deploying Microsoft Teams Rooms, refer to the Microsoft Teams Rooms documentation.

UC-C100-T-GV

Minimum Requirements

Ensure that the below requirements are met prior to setting up the system.

- A certified USB Camera (not included).
- A certified, AEC-enabled USB speakerphone or DSP device (not included).
- A video display (not included) connected to the UC Engine. A second display is optional.
- A Microsoft Teams Rooms provisioned account (not included).

In The Box

Qty.	Description
	Tabletop Touch Screen
1	10.1 in. Tabletop Touch Screen (6510833)
1	Grommet, Cable, Closed (2055455)
1	Grommet, Cable, Open (2055456)
1	Cover, Cable compartment (2055457)
	UC Bracket Assembly
1	UC Bracket Assembly with UC Engine and HDMI content ingest (UC-BRKT-200-S-T-ASSY, 6512689)
2	Anchor, Drywall, Plastic, 3/8 in. x 1/2 in. (9.5 mm x 12.7 mm) (2052565)
1	Key, Anchor (4529654)
2	Screw, 8-AB x 1-1/2 in. (38.1 mm), Pan Head, Combo (2052567)
4	Tie Wrap (2047935)
	Additional Items
1	Cable, CAT6a, RJ-45 - RJ-45, 20 ft (6.1 m) (6507640)
2	Cable, CAT6a, RJ-45 - RJ-45, 7 ft (2.1 m) (6507637)
1	Cable, HDMI 2.1, Goverment Version, 6 ft (1.8 m) (6513984)
1	Cable, DisplayPort to HDMI, Government Version, 6 ft (1.8 m) (6513983)

Mount Devices

Mount the UC Bracket Assembly

Mount the UC Bracket Assembly to VESA® compliant display devices, a wall, or other building structure. Anchors and screws are supplied for installation on walls with 3/8 in. (9.5 mm) to 3/4 in. (19 mm) thickness.

CAUTION: Preinstalled screws may protrude from the back of the UC Bracket Assembly. Exercise caution when handling the UC Bracket Assembly to avoid scratching or damaging surfaces.

NOTE: The integrated cable tie wraps are reusable. Avoid damaging the cable tie wraps.

Identify the UC Bracket Assembly

The UC Bracket Assembly is available in two models. Identify the model included with your Crestron Flex system. Tap or click the corresponding image below to navigate to the appropriate connection instructions.

UC Bracket Assembly with HD-CONV-USB-200

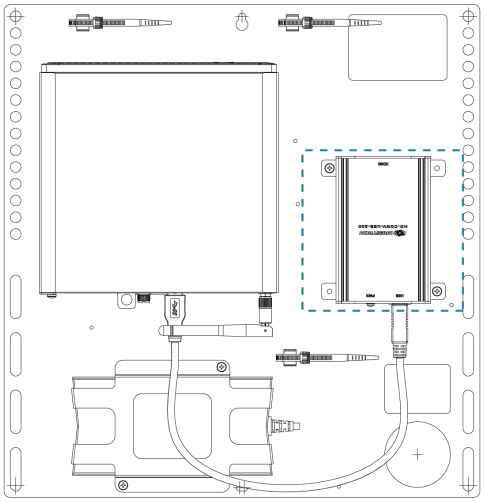

UC Bracket Assembly with HD-CONV-USB-300

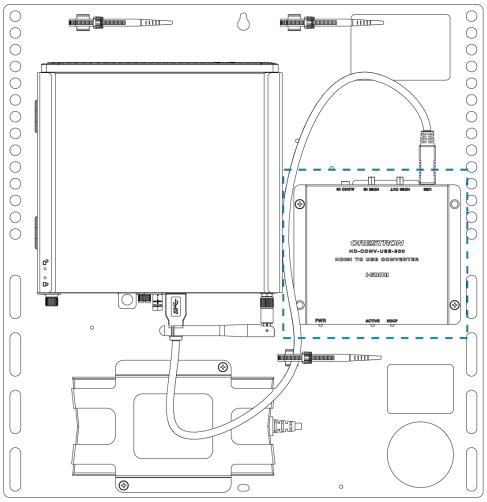

System Overview

For UC Bracket Assembly with HD-CONV-USB-200

When connections are complete, the system appears as shown below. Refer to Make Connections on page 175 for detailed connection instructions.

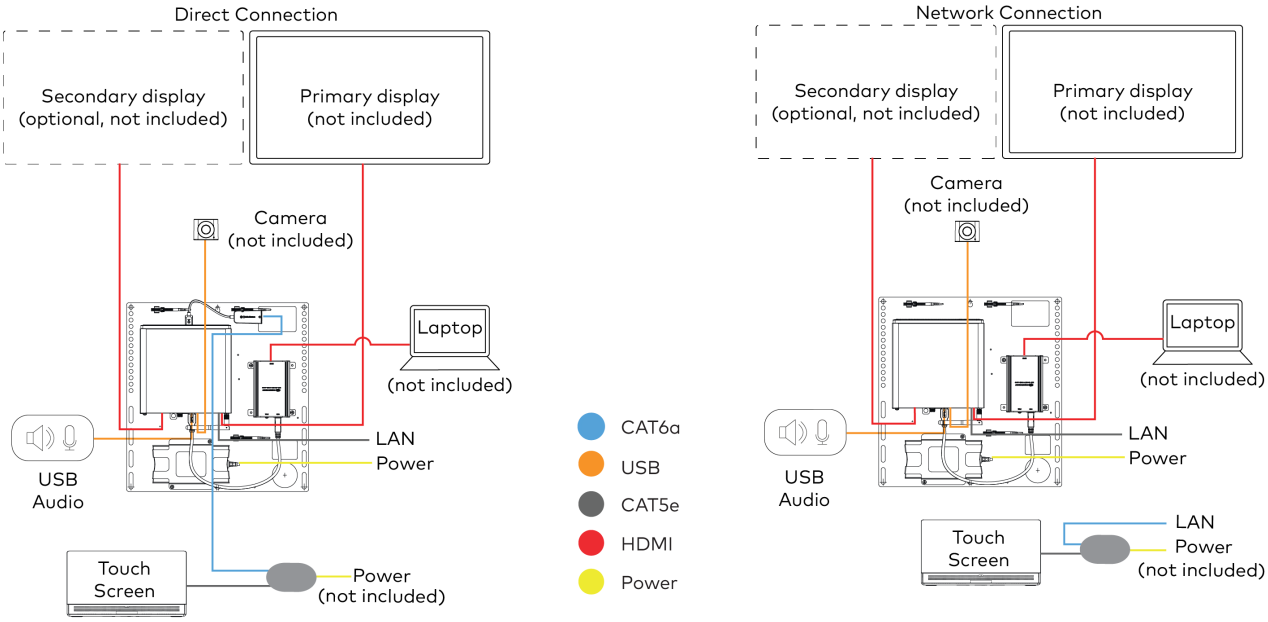

For UC Bracket Assembly with HD-CONV-USB-300

When connections are complete, the system appears as shown below. Refer to Make Connections on page 175 for detailed connection instructions.

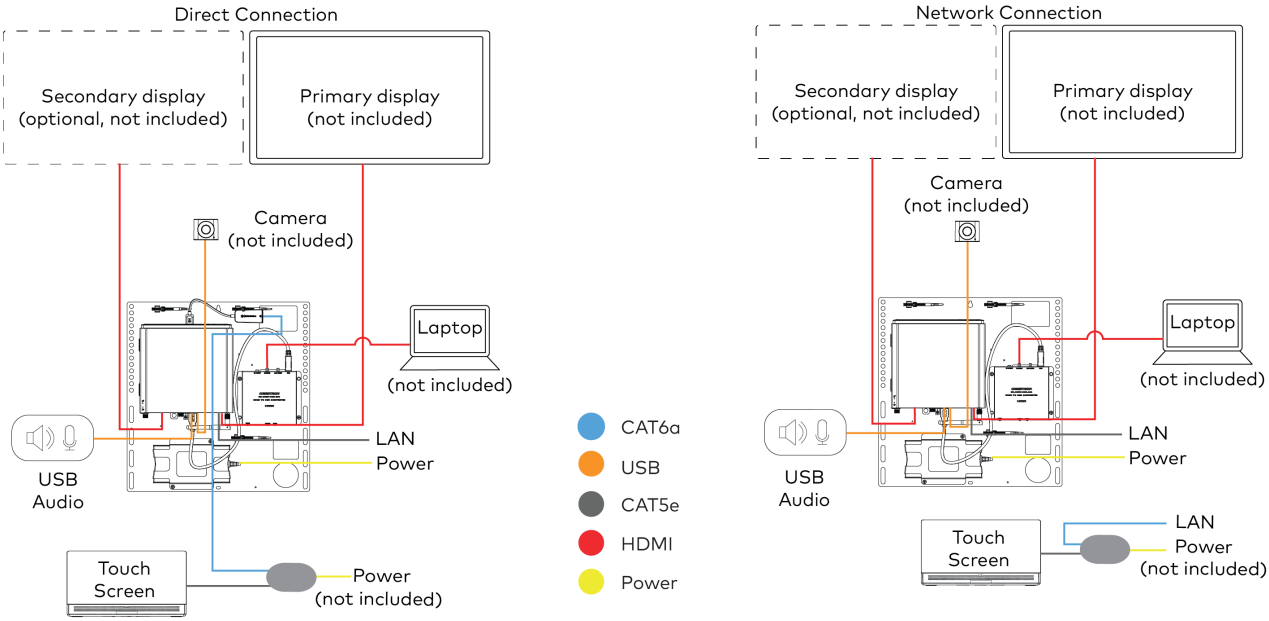

Make Connections

NOTE: For reference, the UC Bracket Assembly is shown with the HD-CONV-USB-200 in the following connection diagrams. Unless otherwise indicated in this guide, the connections remain the same for the UC Bracket Assembly with HD-CONV-USB-200 and HD-CONV-USB-300.

1. Make UC Engine connections as shown in the following illustrations. The touch screen can communicate with the UC Engine over a direct connection or a network connection. Select one of the connection types as described below.
   - Make a direct connection for simple installation and setup. Only use the direct connect adapter to connect the touch screen's PoE injector (not included) to the UC Engine. Do not use the direct connect adapter to connect the UC Engine to the network.

     Direct Connection

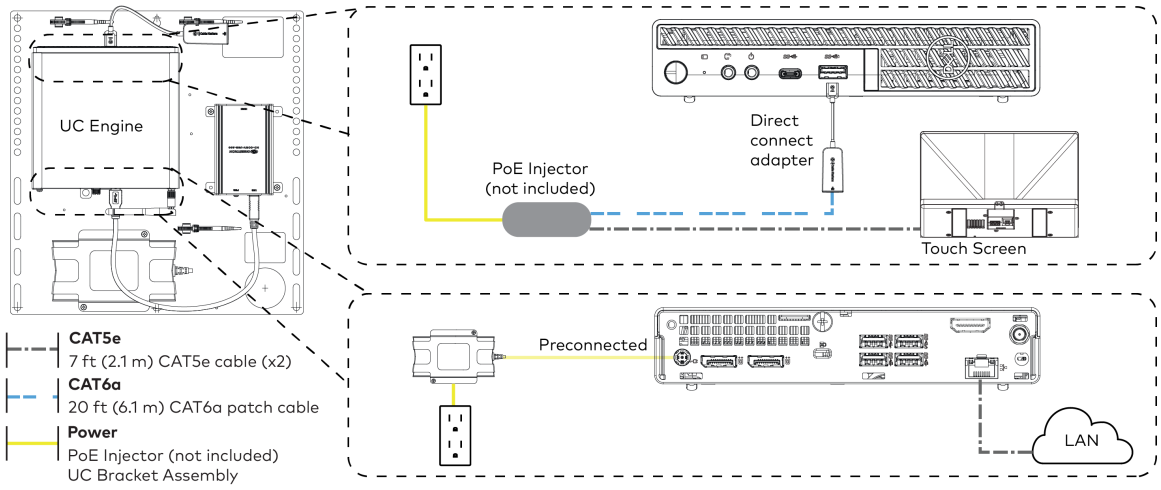

- Make a network connection if the system is to be managed by the XiO Cloud® service.

> **NOTE:** When a network connection is used, disconnect the direct connect adapter from the UC Engine.

Network Connection

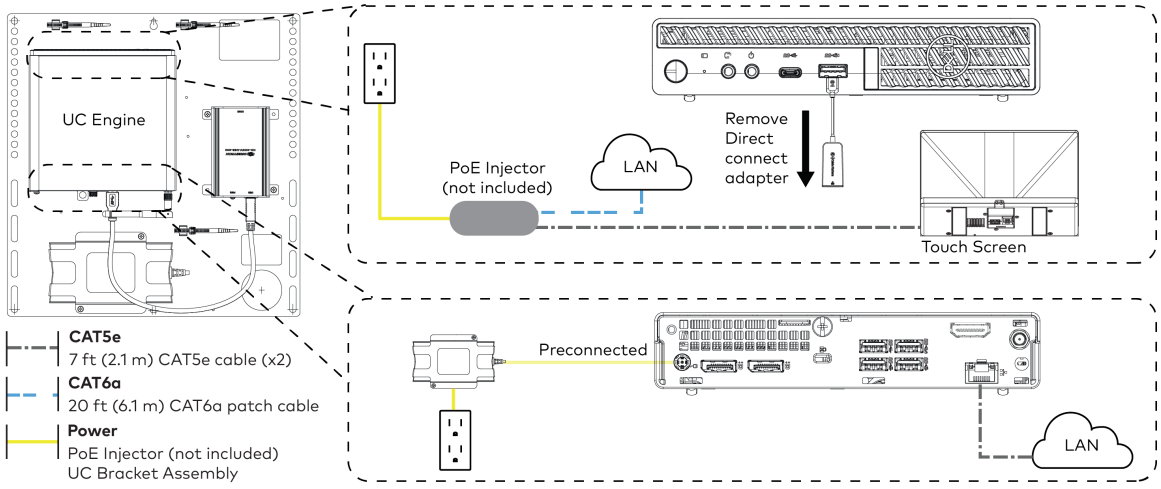

2. Connect a USB audio source (accessory, not included) and displays to the UC Engine.

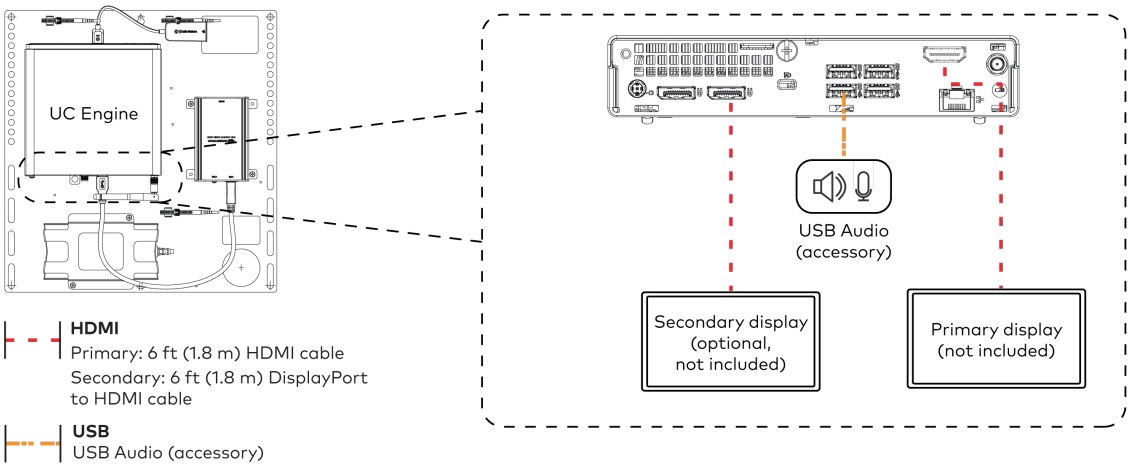

3. Connect a camera (not included) to the UC Engine as shown in the image below. Do not connect the camera to any of the other USB ports.

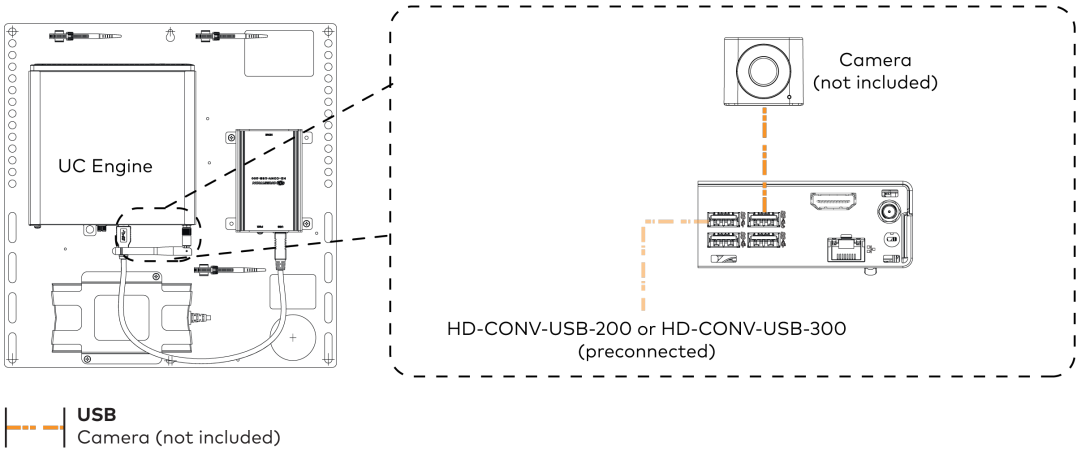

4. Connect a laptop to the HD-CONV-USB-200 or HD-CONV-USB-300.

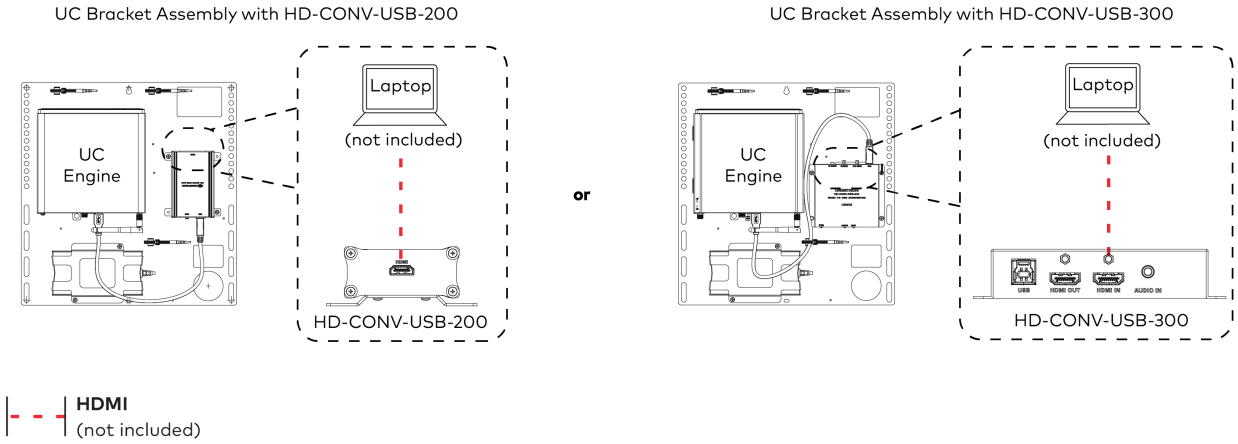

5. Bundle the cables to the bracket assembly with the integrated cable tie wraps. The cable tie wraps are reusable.

Apply Power

Press the power button on the bottom of the UC Engine and apply power to all of the other devices in the system.

Configure the Touch Screen

> **NOTE:** If a direct connection was made during installation, skip to Configure the System on page 178.

1. On a computer, enter the IP address of the touch screen into a web browser. Log in and navigate to **Settings** > **Applications**.

   NOTES:
   - The touch screen (via the PoE injector) and computer must be on the same network switch and VLAN.
   - A login with administrative rights for the touch screen is required.

2. Enter the following information in the appropriate fields:
   - **Teams Video PC Address**: Enter the IP address or hostname of the UC Engine.

     NOTE: The hostname is printed on a label affixed to the UC Engine (mounted on the UC bracket assembly).

   - **Teams Video PC Port**: By default, port number 49500 is used. If a different port number has been configured on the UC Engine, enter that port number instead.
   - **Teams Video Username**: Enter the login username for the UC Engine. (The default username is "admin".)
   - **Teams Video Password**: Enter the login password for the UC Engine. (The default password is "sfb".)
3. Select **Save Changes**.

Configure the System

Use the touch screen and your Microsoft Teams credentials to configure the UC Engine, as described in Configuration on page 296. For detailed information on deploying Microsoft Teams Rooms, refer to the Microsoft Teams Rooms documentation.

UC-CX100-T-GV

Minimum Requirements

Ensure that the below requirements are met prior to setting up the system.

- A certified USB Camera (not included).
- A certified, AEC-enabled USB speakerphone or DSP device (not included).
- A video display (not included) connected to the UC Engine. A second display is optional.
- A Microsoft Teams Rooms provisioned account (not included).

In The Box

Qty.	Description
	Tabletop Touch Screen
1	10.1 in. Tabletop Touch Screen (6510833)
1	Grommet, Cable, Closed (2055455)
1	Grommet, Cable, Open (2055456)
1	Cover, Cable compartment (2055457)
	UC Bracket Assembly
1	UC Bracket Assembly with UC Engine and HDMI or AV over CAT5 content ingest (UC-BRKT-260-P-T-ASSY, 6512691)
1	Power pack (2045870)
2	Anchor, Drywall, Plastic, 3/8 in. x 1/2 in. (9.5 mm x 12.7 mm) (2052565)
1	Key, Anchor (4529654)
2	Screw, 8-AB x 1-1/2 in. (38.1 mm), Pan Head, Combo (2052567)
4	Tie Wrap (2047935)
	UC Presentation Transmitter with Cable Organizer
1	Presentation transmitter (6510936)
1	Cable Organizer
1	Power pack (2056363) with cord (2001134)
1	Bracket, power supply (2056257)
1	Cable, USB to USB, 6.56 ft (2 m) (2056116)
1	Cable, HDMI®, 6.56 ft (2 m) (2056117)
1	Cable, USB 2.0, A to Micro B, 6.56 ft (2 m) (2055504)
8	Screw, 10-9 x 5/8 in. (15.9 mm), Pan Head, Phillips, Black (2054365)
	Additional Items
2	Cable, CAT6a, RJ-45 - RJ-45, 20 ft (6.1 m) (6507640)
2	Cable, CAT6a, RJ-45 - RJ-45, 7 ft (2.1 m) (6507637)
1	Cable, HDMI 2.1, Goverment Version, 6 ft (1.8 m) (6513984)
1	Cable, DisplayPort to HDMI, Government Version, 6 ft (1.8 m) (6513983)

Mount Devices

Mount the UC Bracket Assembly

Mount the UC Bracket Assembly to VESA® compliant display devices, a wall, or other building structure. Anchors and screws are supplied for installation on walls with 3/8 in. (9.5 mm) to 3/4 in. (19 mm) thickness.

CAUTION: Preinstalled screws may protrude from the back of the UC Bracket Assembly. Exercise caution when handling the UC Bracket Assembly to avoid scratching or damaging surfaces.

NOTE: The integrated cable tie wraps are reusable. Avoid damaging the cable tie wraps.

Mount the UC Presentation Transmitter

Mount the UC Presentation Transmitter to the underside of a table using the supplied screws. The supplied screws support installation on tables with a thickness of 1 in. (25.4 mm) minimum.

Mount the Cable Organizer for the UC-PR

Mount the Cable Organizer according to the Cable Organizer for the UC-PR (Doc. 8966).

System Overview

When connections are complete, the system appears as shown below. The laptop connections shown below may vary based on the selected connection method. Refer to Make Connections on page 182 for detailed connection instructions.

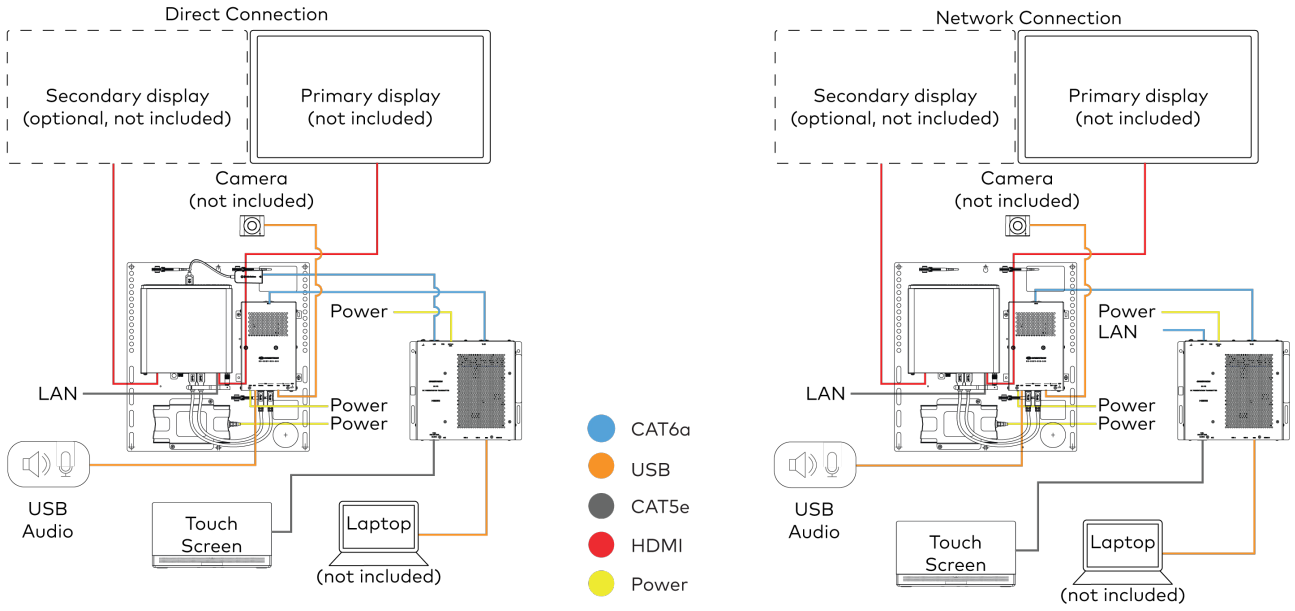

Make Connections

1. Make UC Engine connections as shown in the following illustrations. The UC Presentation Transmitter can communicate with the UC Engine over a direct connection or a network connection. Select one of the connection types as described below.
   - Make a direct connection for simple installation and setup. Only use the direct connect adapter to connect the UC Presentation Transmitter to the UC Engine. Do not use the direct connect adapter to connect the UC Engine to the network.

     Direct Connection

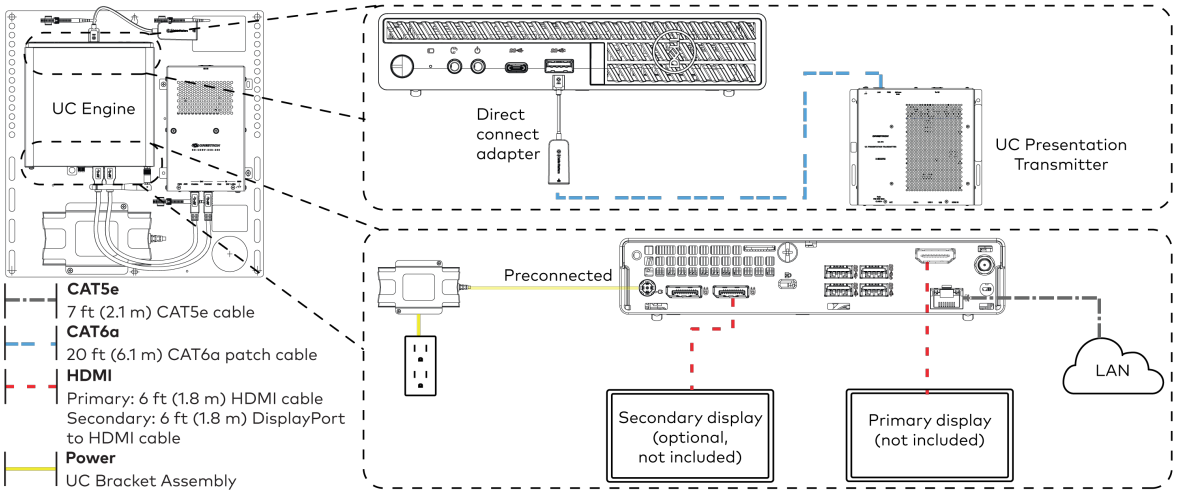

   - Make a network connection if the system is to be managed by the XiO Cloud® service.

> **NOTE:** When a network connection is used, disconnect the direct connect adapter from the UC Engine.

Network Connection

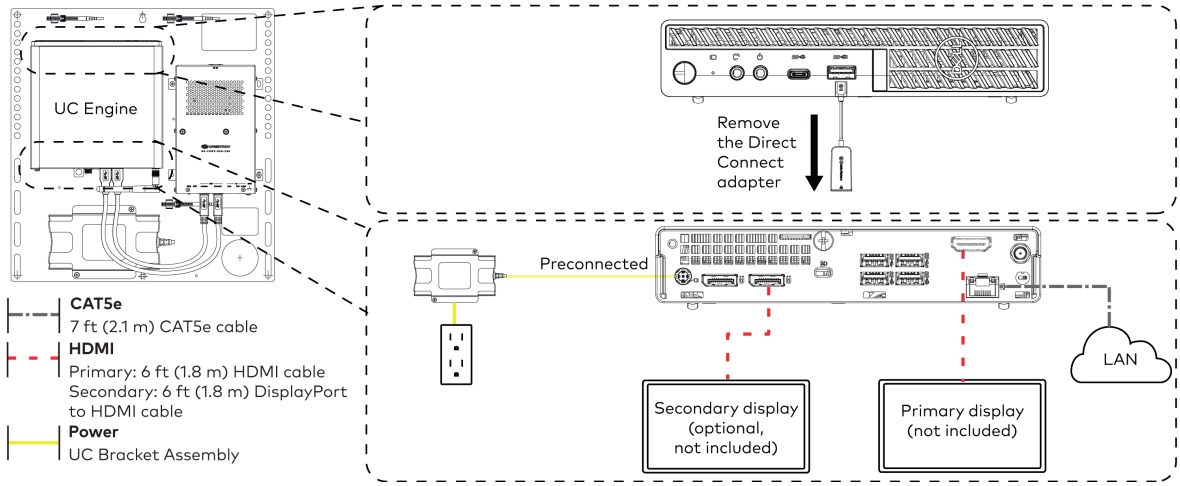

2. Connect the power supply, USB audio (accessory, not included), and a camera (not included) to the bottom of the content ingest device (HD-CONV-USB-260). Connect the power supply to an AC power outlet.

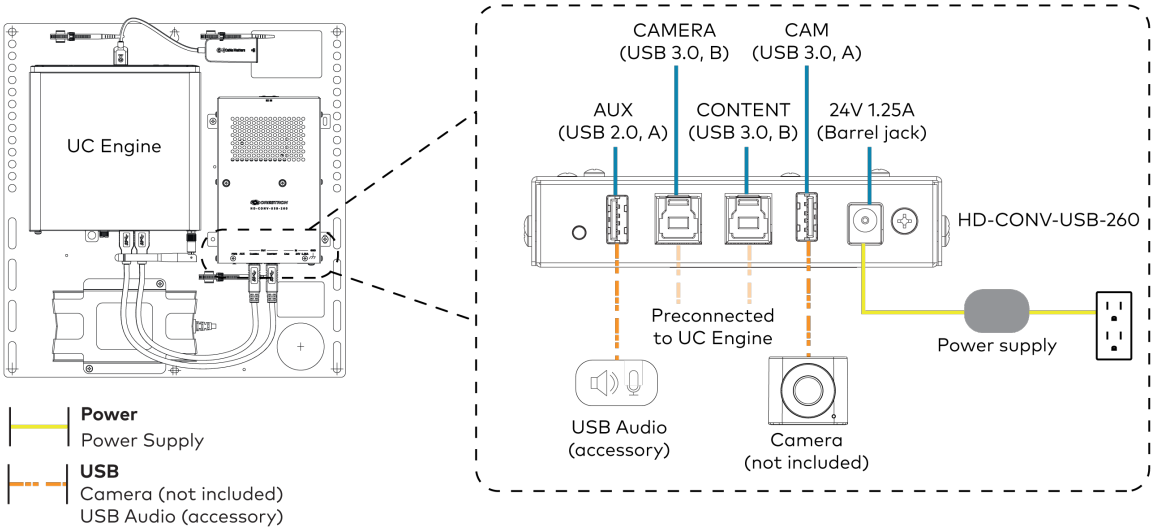

3. Connect power and the content ingest device (HD-CONV-USB-260) to the top of the UC Presentation Transmitter. Connect the UC Engine or LAN to make a direct or network connection as described in step 1.

NOTE: If a longer cable between the UC Presentation Transmitter and the HD-CONV-USB-260 is needed, use a DigitalMedia™ Ultra cable only. The maximum supported cable length is 300 ft (91.4 m).

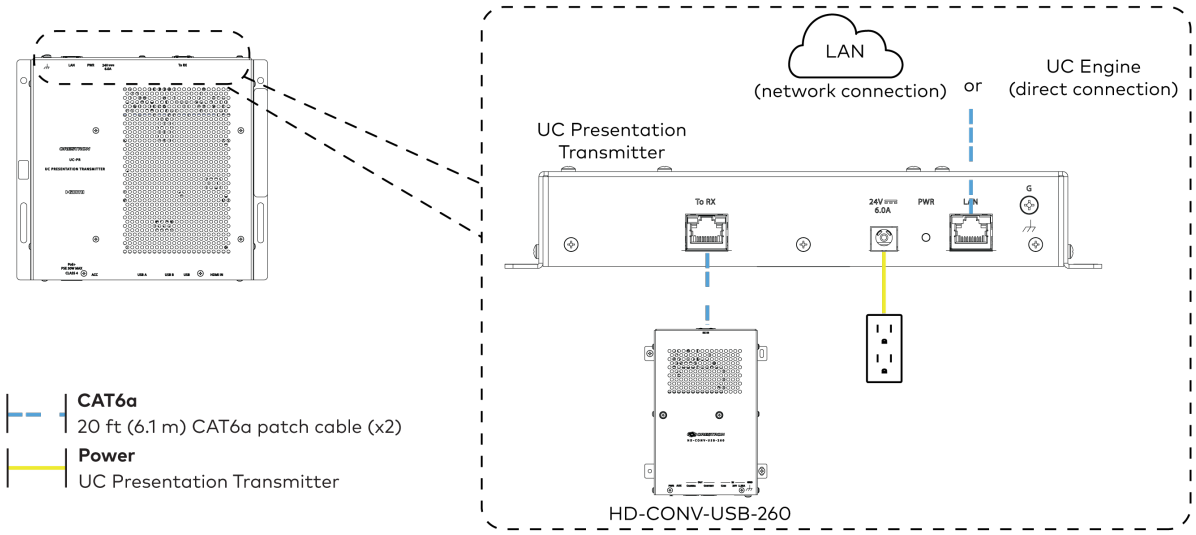

4. Connect the touch screen to the bottom of the UC Presentation Transmitter.

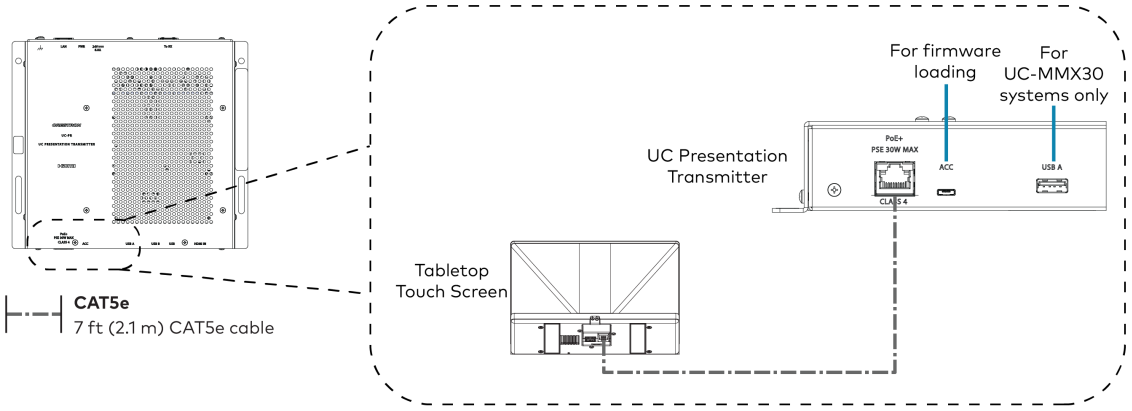

5. Connect a laptop to either the USB port or both the HDMI and USB B ports on the bottom of the UC Presentation Transmitter. Select a connection type based on the available ports on the user's laptop.

> **NOTE:** If the USB port is used along with either the HDMI or USB B port, the UC Presentation Transmitter will communicate via the USB port by default.

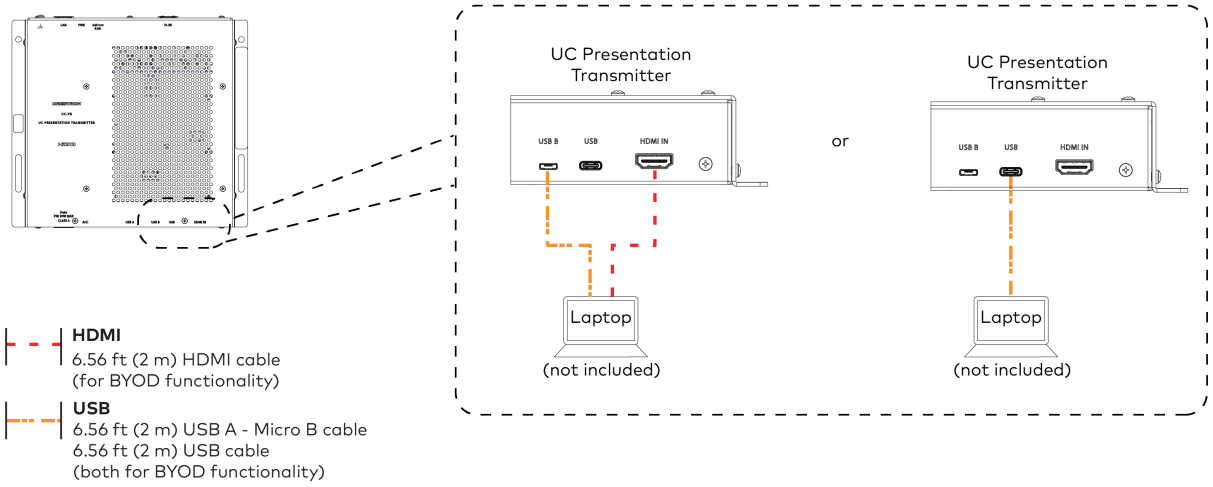

6. Bundle the cables to the bracket assembly with the integrated cable tie wraps. The cable tie wraps are reusable.

Apply Power

Press the power button on the bottom of the UC Engine and apply power to all of the other devices in the system.

Configure the Touch Screen

NOTE: If a direct connection was made during installation, skip to Configure the System on page 185.

1. On a computer, enter the IP address of the touch screen into a web browser. Log in and navigate to **Settings** > **Applications**.

   NOTES:
   - The touch screen (via the PoE injector) and computer must be on the same network switch and VLAN.
   - A login with administrative rights for the touch screen is required.

2. Enter the following information in the appropriate fields:
   - **Teams Video PC Address**: Enter the IP address or hostname of the UC Engine.

     NOTE: The hostname is printed on a label affixed to the UC Engine (mounted on the UC bracket assembly).

   - **Teams Video PC Port**: By default, port number 49500 is used. If a different port number has been configured on the UC Engine, enter that port number instead.
   - **Teams Video Username**: Enter the login username for the UC Engine. (The default username is "admin".)
   - **Teams Video Password**: Enter the login password for the UC Engine. (The default password is "sfb".)
3. Select **Save Changes**.

Configure the System

Use the touch screen and your Microsoft Teams credentials to configure the UC Engine, as described in Configuration on page 296. For detailed information on deploying Microsoft Teams Rooms, refer to the Microsoft Teams Rooms documentation.

UC-MM30-T and UC-MM30-T-I

Minimum Requirements

Ensure that the below requirements are met prior to setting up the system.

- A video display (not included) connected to the UC Engine. A second display is optional.
- A Microsoft Teams Rooms provisioned account (not included).

> **NOTE:** Unless otherwise indicated in this section, the connection procedure is the same for UC-MM30-T and UC-MM30-T-I.

In The Box

Qty.	Description
	UC Bracket Assembly
1	UC Bracket Assembly with UC Engine and HDMI content ingest (UC-BRKT-200-S-T-ASSY, 6512689)
2	Anchor, Drywall, Plastic, 3/8 in. x 1/2 in. (9.5 mm x 12.7 mm) (2052565)
1	Key, Anchor (4529654)
2	Screw, 8-AB x 1-1/2 in. (38.1 mm), Pan Head, Combo (2052567)
4	Tie Wrap (2047935)
	Mini Tabletop Conference Device
1	Flex MM Tabletop Conference Device, Microsoft Teams video (6511613 or 6511614)
1	PoE+ Injector (2055605)
2	Cable, CAT5e, RJ-45 - RJ-45, 11.8 ft (3.6 m) (2056204)
1	Cable, USB 2.0, A - Micro B, 5.8 ft (1.8 m) (2055579)
	CCS-CAM-USB-F-400 Collaboration Camera
1	Collaboration camera (6510482)
1	Camera wall mount kit (6510998)
	Additional Items
1	Cable, CAT6a, RJ-45 - RJ-45, 20 ft (6.1 m) (6507640)
1	Cable, CAT5e, RJ-45 - RJ-45, 7 ft (2.1 m) (6509924)
1	Cable, HDMI 2.1, 6 ft (1.8 m) (6512150)
1	Cable, HDMI, 20 ft (6.1 m) (6503567)
1	Cable, DisplayPort to HDMI, 6 ft (1.8 m) (6508282)
1	Cable, USB Extension, USB Type A Male-to-Female, 15 ft (4.6 m) (6508260)
1	Cable, USB 3.0, Right angle USB-C to A, 6 ft (1.8 m) (6511591)

Mount Devices

Mount the UC Bracket Assembly

Mount the UC Bracket Assembly to VESA® compliant display devices, a wall, or other building structure. Anchors and screws are supplied for installation on walls with 3/8 in. (9.5 mm) to 3/4 in. (19 mm) thickness.

CAUTION: Preinstalled screws may protrude from the back of the UC Bracket Assembly. Exercise caution when handling the UC Bracket Assembly to avoid scratching or damaging surfaces.

NOTE: The integrated cable tie wraps are reusable. Avoid damaging the cable tie wraps.

Mount the Camera

Mount the included camera according to the UC-CAM-WMK Quick Start (Doc. 8257).

Mount the Tabletop Conference Device

The tabletop conference device can be placed on any flat surface or secured on a table using the UCA-SMK-UC2 or UCA-SMKR-UC2-3 tabletop swivel mount kit (sold separately). Refer to Quick Start: UC-2-T-V(-I) for functional details.

Identify the UC Bracket Assembly

The UC Bracket Assembly is available in two models. Identify the model included with your Crestron Flex system. Tap or click the corresponding image below to navigate to the appropriate connection instructions.

UC Bracket Assembly with HD-CONV-USB-200

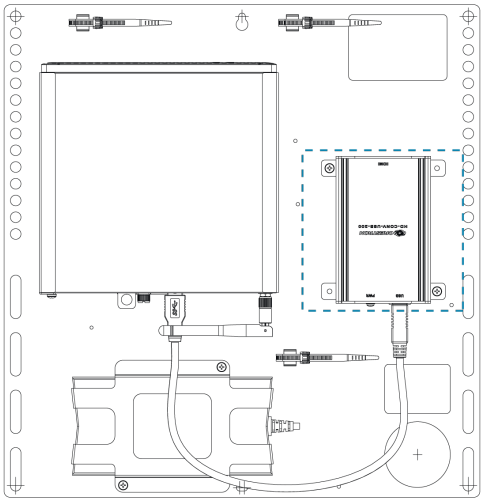

UC Bracket Assembly with HD-CONV-USB-300

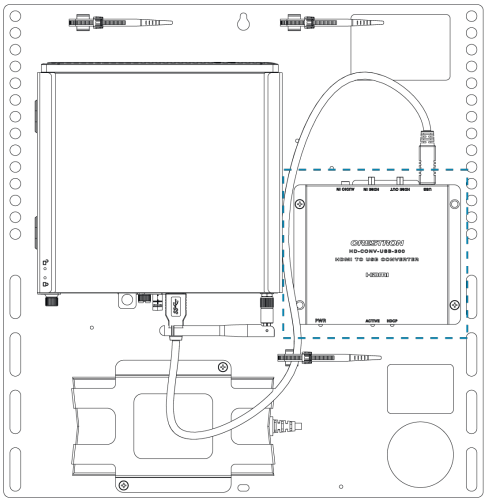

System Overview

For UC Bracket Assembly with HD-CONV-USB-200

When connections are complete, the system appears as shown below. Refer to Make Connections on page 190 for detailed connection instructions.

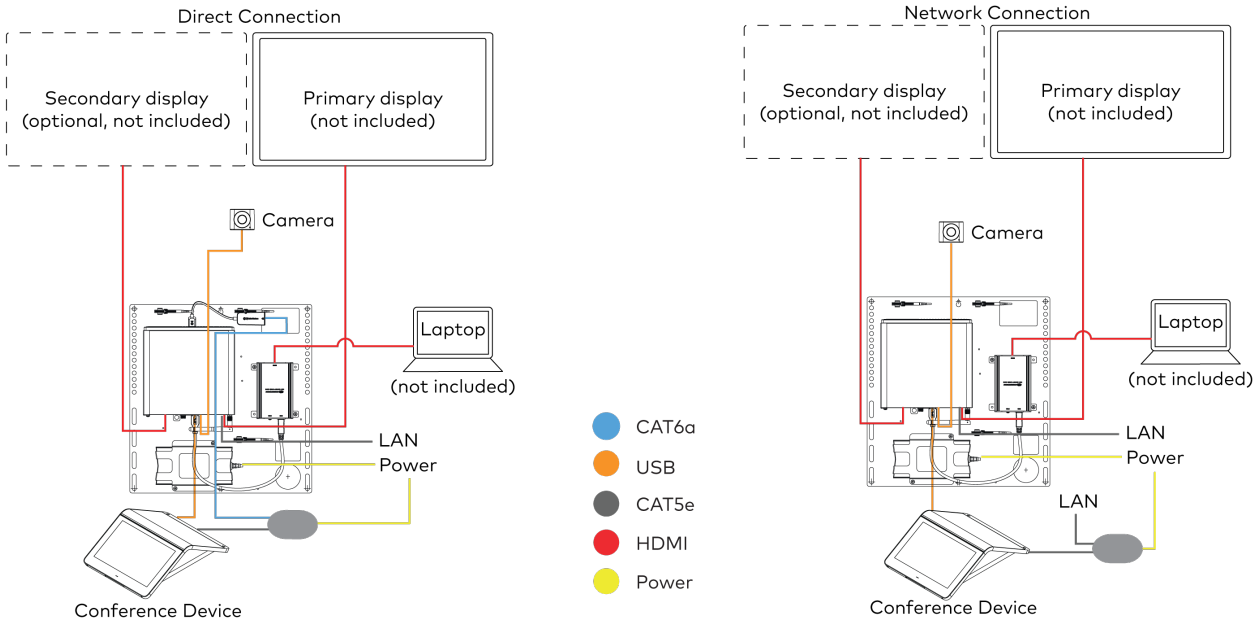

For UC Bracket Assembly with HD-CONV-USB-300

When connections are complete, the system appears as shown below. Refer to Make Connections on page 190 for detailed connection instructions.

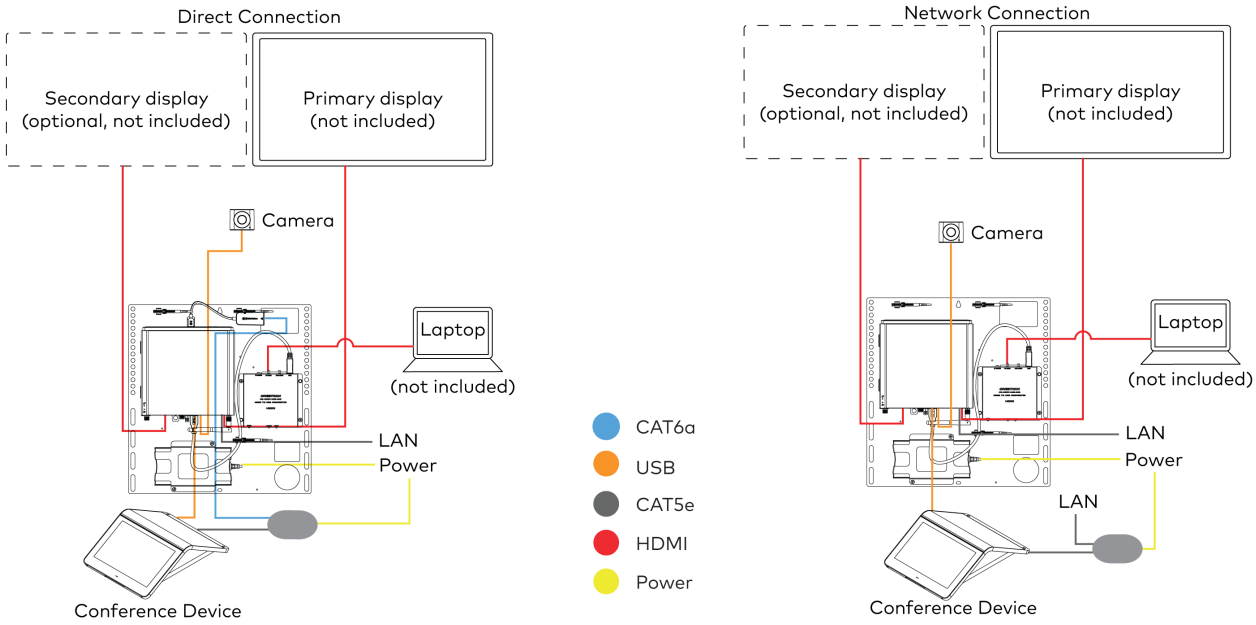

Make Connections

NOTE: For reference, the UC Bracket Assembly is shown with the HD-CONV-USB-200 in the following connection diagrams. Unless otherwise indicated in this guide, the connections remain the same for the UC Bracket Assembly with HD-CONV-USB-200 and HD-CONV-USB-300.

1. Make UC Engine connections as shown in the following illustrations. The conference device can communicate with the UC Engine over a direct connection or a network connection. Select one of the connection types as described below.
   - Make a direct connection for simple installation and setup. Only use the direct connect adapter to connect the conference device to the UC Engine. Do not use the direct connect adapter to connect the UC Engine to the network.

     Direct Connection

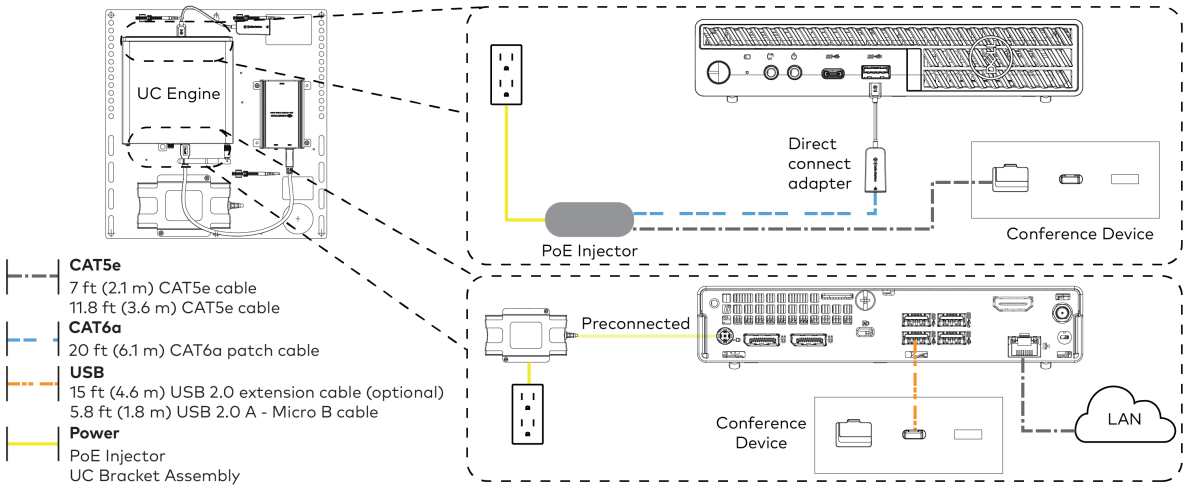

- Make a network connection if the system is to be managed by the XiO Cloud® service.

> **NOTE:** When a network connection is used, disconnect the direct connect adapter from the UC Engine.

Network Connection

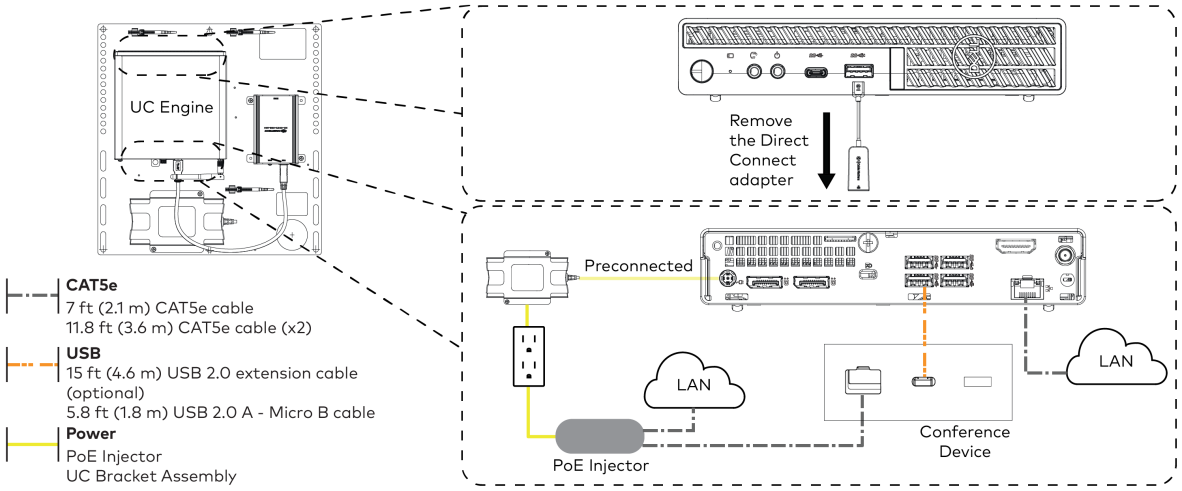

2. Connect displays to the UC Engine.

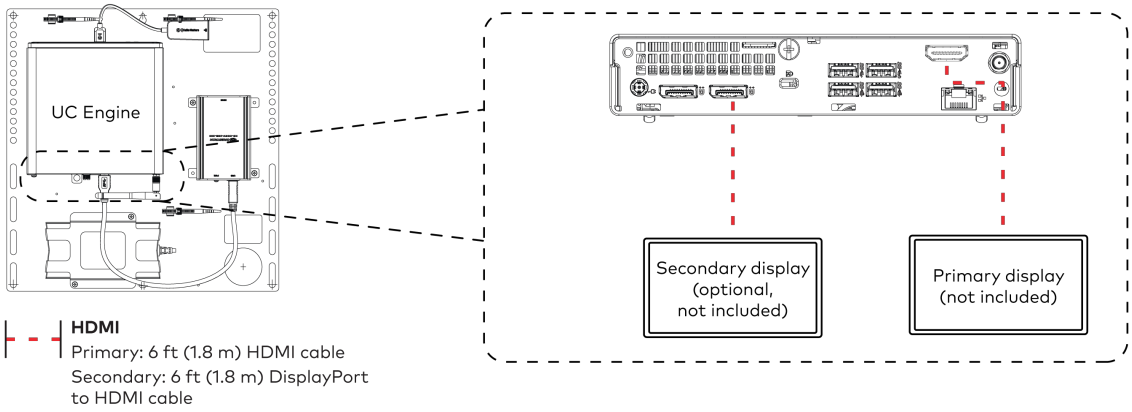

3. Connect the camera to the UC Engine as shown in the image below. Do not connect the camera to any of the other USB ports.

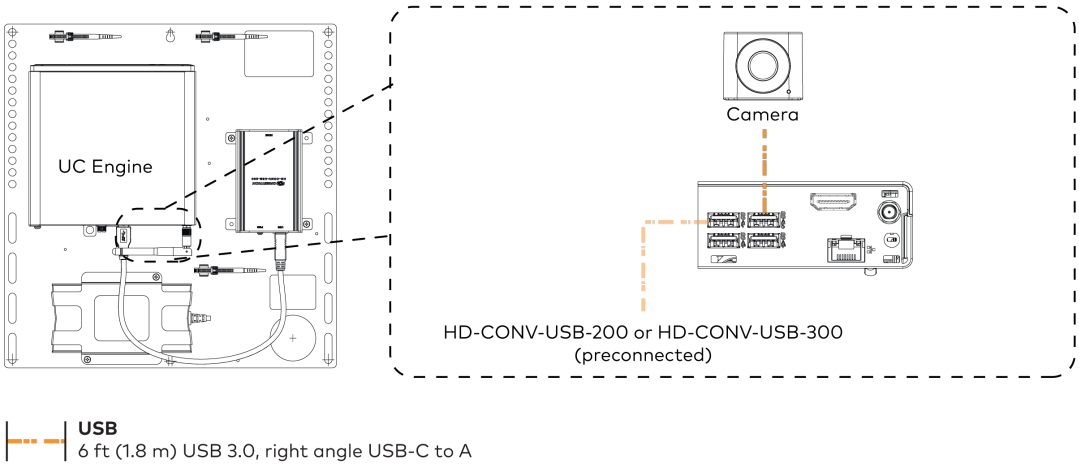

USB
6 ft (1.8 m) USB 3.0, right angle USB-C to A

4. Connect a laptop to the HD-CONV-USB-200 or HD-CONV-USB-300.

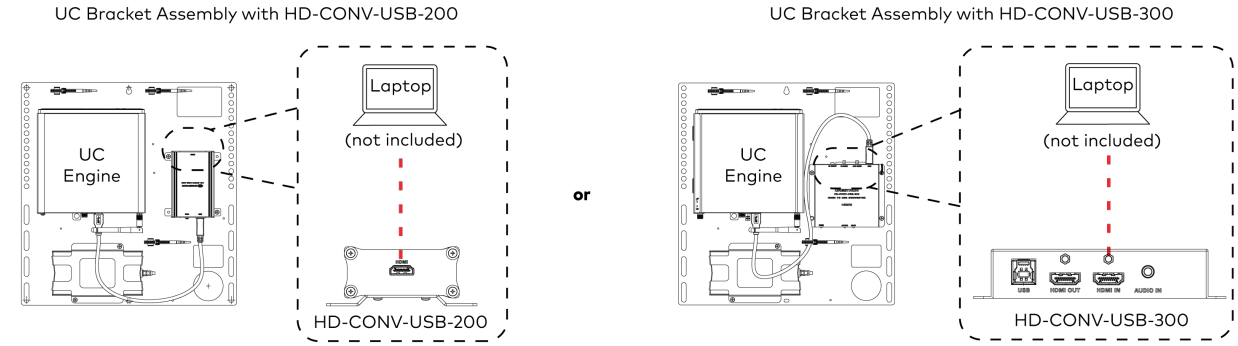

HDMI
20 ft (6.1 m) HDMI cable

5. Bundle the cables to the bracket assembly with the integrated cable tie wraps. The cable tie wraps are reusable.

Apply Power

Press the power button on the bottom of the UC Engine and apply power to all of the other devices in the system.

Configure the Conference Device

> **NOTE:** If a Direct Connection was made between the conference device and the UC Engine, skip to Configure the System on page 193.

1. On a computer, enter the IP address found in the conference device's settings into a web browser.

   NOTES:
   - The device and computer must be on the same network switch and VLAN.
   - A login with administrative rights for the device is required.

2. Log in to the device and navigate to **DEVICE** > **Applications**.
3. Enter the following information in the appropriate fields:
   - **Teams Video PC Address**: Enter the IP address or hostname of the UC Engine.

     NOTE: The hostname is printed on a label affixed to the UC Engine.

   - **Teams Video PC Port**: By default, port number 49500 is used. If a different port number has been configured on the UC Engine, enter that port number instead.
   - **Teams Video Username**: Enter the login username for the UC Engine. (The default username is "admin".)
   - **Teams Video Password**: Enter the login password for the UC Engine. (The default password is "sfb".)
4. Select **Save Changes**.

Configure the System

Use the conference device and your Microsoft Teams credentials to configure the UC Engine, as described in Configuration on page 296. For detailed information on deploying Microsoft Teams Rooms, refer to the Microsoft Teams Rooms documentation.

NOTE: Microsoft Teams does not support emergency calling in Japan. For more information on emergency calling from Microsoft Teams, refer to Manage emergency calling.

Factory Reset

A factory reset may be performed when troubleshooting the conference device.

To perform a factory reset on the conference device:

1. Power cycle the device by disconnecting and reconnecting the CAT5e cable from the conference device.
2. When the device powers on and the LEDs flash green, tap the button below the Crestron® logo 10 times. A factory reset confirmation screen appears.

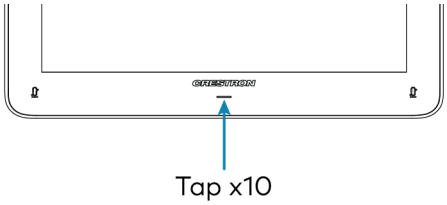

3. Tap one of the mute buttons to move the selector on the factory reset confirmation screen to **Yes**. Tap the button below the Crestron logo to confirm the factory reset.

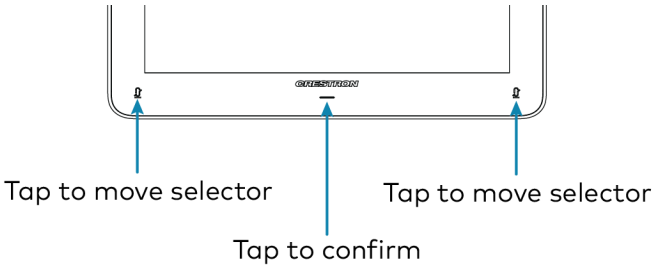

4. The device will reboot. Configure the device as described in Configure the Conference Device section.

UC-MMX30-T and UC-MMX30-T-I

Minimum Requirements

Ensure that the below requirements are met prior to setting up the system.

- A video display (not included) connected to the UC Engine. A second display is optional.
- A Microsoft Teams Rooms provisioned account (not included).

> **NOTE:** Unless otherwise indicated in this section, the connection procedure is the same for UC-MMX30-T and UC-MMX30-T-I.

In The Box

Qty.	Description
	UC Bracket Assembly
1	UC Bracket Assembly with UC Engine and HDMI or AV over CAT5 content ingest (UC-BRKT-260-P-T-ASSY, 6512691)
1	Power pack (2045870)
2	Anchor, Drywall, Plastic, 3/8 in. x 1/2 in. (9.5 mm x 12.7 mm) (2052565)
1	Key, Anchor (4529654)
2	Screw, 8-AB x 1-1/2 in. (38.1 mm), Pan Head, Combo (2052567)
4	Tie Wrap (2047935)
	UC Presentation Transmitter with Cable Organizer
1	Presentation transmitter (6510936)
1	Cable Organizer
1	Power pack (2056363) with cord (2001134)
1	Bracket, power supply (2056257)
1	Cable, USB to USB, 6.56 ft (2 m) (2056116)
1	Cable, HDMI®, 6.56 ft (2 m) (2056117)
1	Cable, USB 2.0, A to Micro B, 6.56 ft (2 m) (2055504)
8	Screw, 10-9 x 5/8 in. (15.9 mm), Pan Head, Phillips, Black (2054365)
	Mini Tabletop Conference Device
1	Flex MM Tabletop Conference Device, Microsoft Teams video (6511613 or 6511614)
1	PoE+ Injector (2055605)
2	Cable, CAT5e, RJ-45 - RJ-45, 11.8 ft (3.6 m) (2056204)
1	Cable, USB 2.0, A - Micro B, 5.8 ft (1.8 m) (2055579)
	CCS-CAM-USB-F-400 Collaboration Camera
1	Collaboration camera (6510482)
1	Camera wall mount kit (6510998)
	Additional Items
2	Cable, CAT6a, RJ-45 - RJ-45, 20 ft (6.1 m) (6507640)
1	Cable, CAT5e, RJ-45 - RJ-45, 7 ft (2.1 m) (6509924)

Qty.	Description
1	Cable, HDMI 2.1, 6 ft (1.8 m) (6512150)
1	Cable, DisplayPort to HDMI, 6 ft (1.8 m) (6508282)
1	Cable, USB 3.0, Right angle USB-C to A, 6 ft (1.8 m) (6511591)

Mount Devices

Mount the UC Bracket Assembly

Mount the UC Bracket Assembly to VESA® compliant display devices, a wall, or other building structure. Anchors and screws are supplied for installation on walls with 3/8 in. (9.5 mm) to 3/4 in. (19 mm) thickness.

CAUTION: Preinstalled screws may protrude from the back of the UC Bracket Assembly. Exercise caution when handling the UC Bracket Assembly to avoid scratching or damaging surfaces.

NOTE: The integrated cable tie wraps are reusable. Avoid damaging the cable tie wraps.

Mount the UC Presentation Transmitter

Mount the UC Presentation Transmitter to the underside of a table using the supplied screws. The supplied screws support installation on tables with a thickness of 1 in. (25.4 mm) minimum.

Mount the Cable Organizer for the UC-PR

Mount the Cable Organizer according to the Cable Organizer for the UC-PR (Doc. 8966).

Mount the Camera

Mount the included camera according to the UC-CAM-WMK Quick Start (Doc. 8257).

Mount the Tabletop Conference Device

The tabletop conference device can be placed on any flat surface or secured on a table using the UCA-SMK-UC2 or UCA-SMKR-UC2-3 tabletop swivel mount kit (sold separately). Refer to Quick Start: UC-2-T-V(-I) for functional details.

System Overview

When connections are complete, the system appears as shown below. The laptop connections shown below may vary based on the selected connection method. Refer to Make Connections on page 198 for detailed connection instructions.

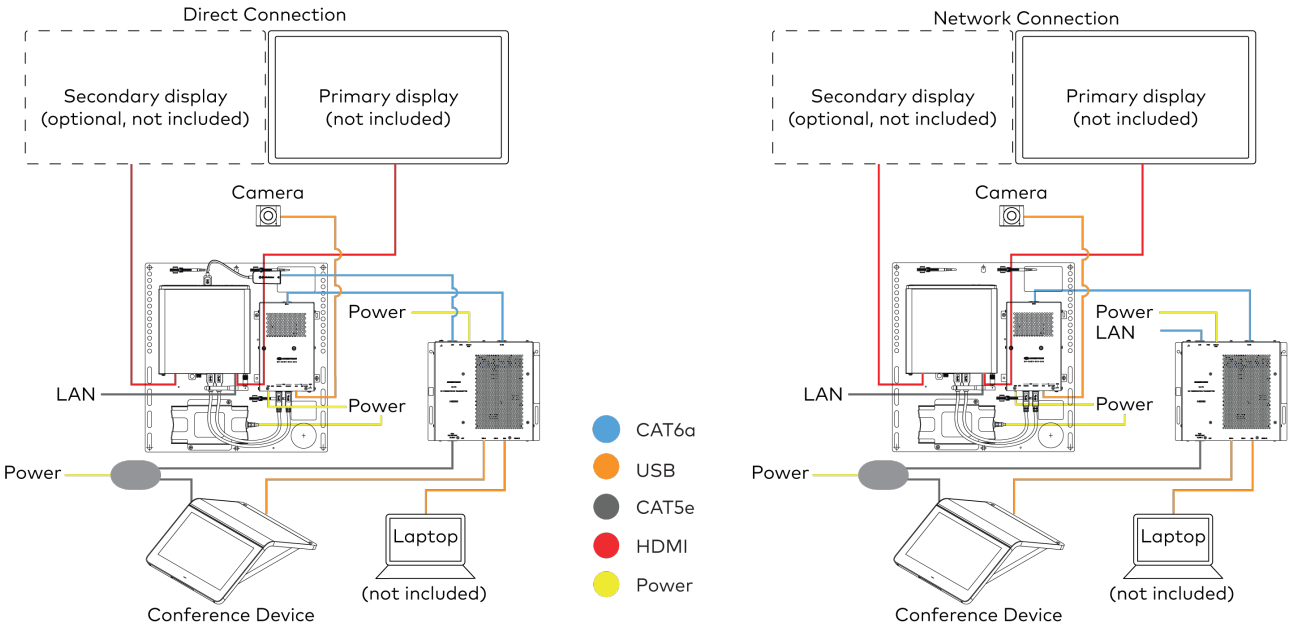

Make Connections

1. Make UC Engine connections as shown in the following illustrations. The UC Presentation Transmitter can communicate with the UC Engine over a direct connection or a network connection. Select one of the connection types as described below.

    - Make a direct connection for simple installation and setup. Only use the direct connect adapter to connect the UC Presentation Transmitter to the UC Engine. Do not use the direct connect adapter to connect the UC Engine to the network.

      Direct Connection

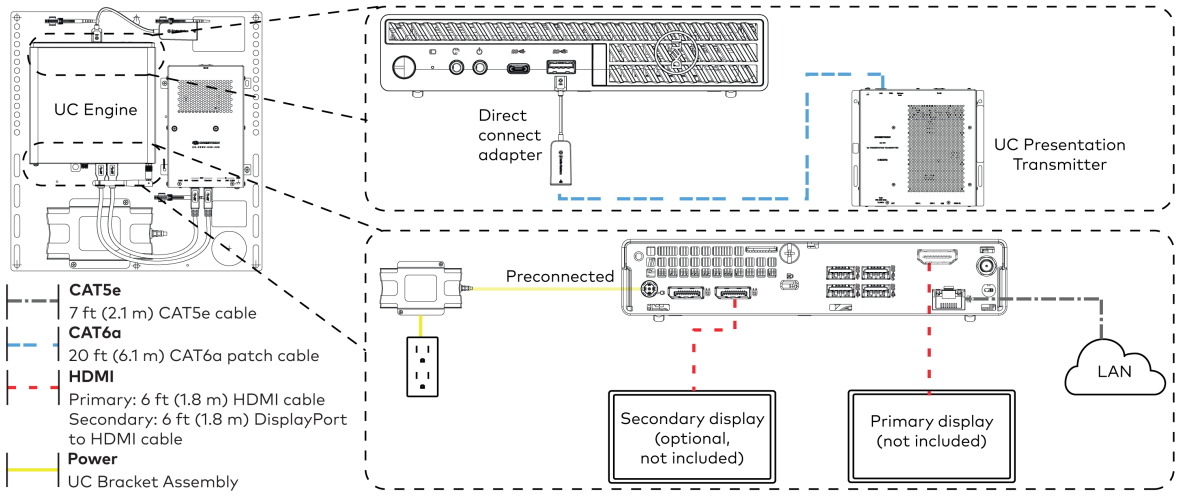

- Make a network connection if the system is to be managed by the XiO Cloud® service.

> **NOTE:** When a network connection is used, disconnect the direct connect adapter from the UC Engine.

Network Connection

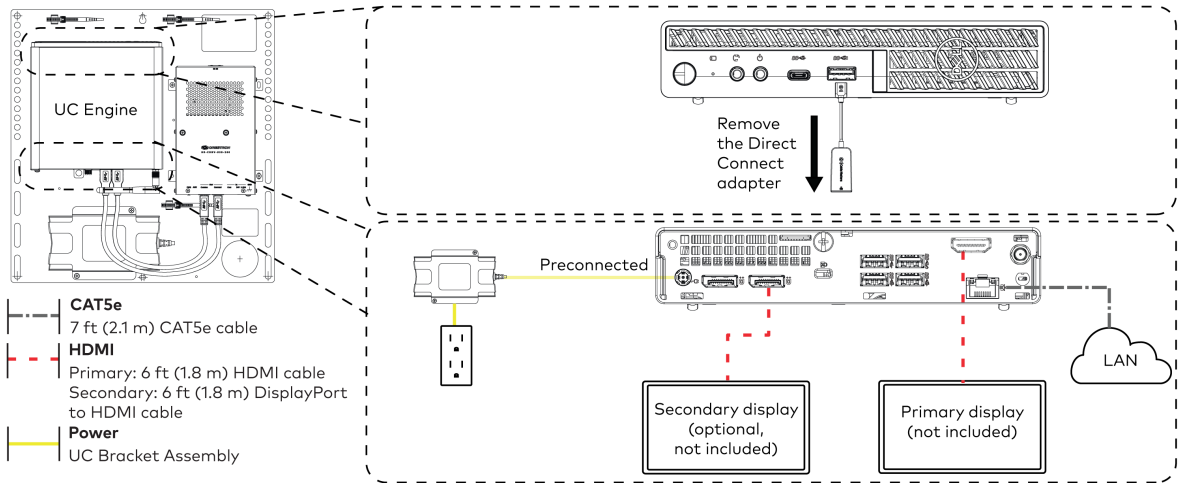

2. Connect the power supply and camera to the bottom of the content ingest device (HD-CONV-USB-260). Connect the power supply to an AC power outlet.

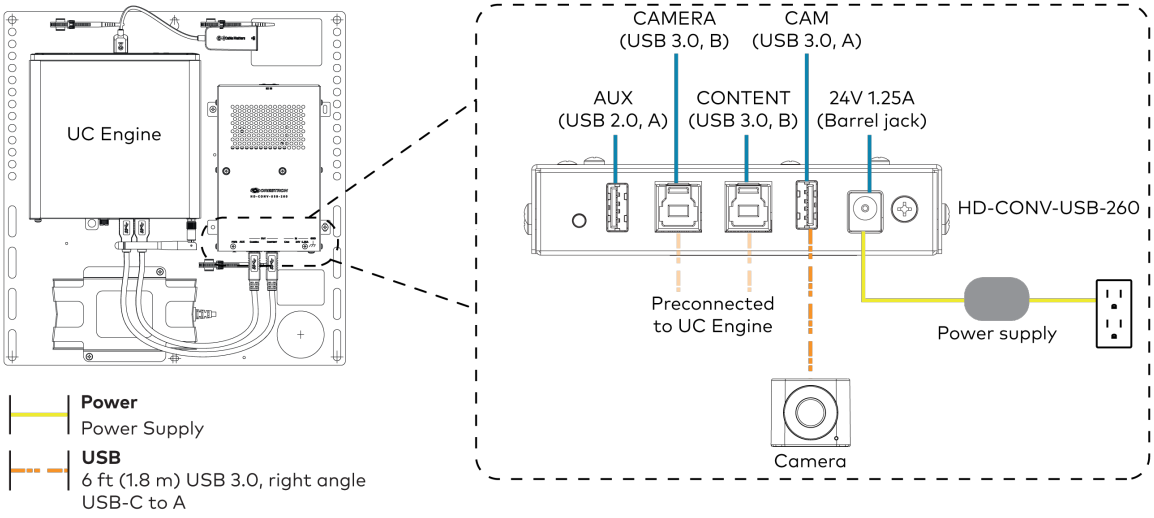

3. Connect power and the content ingest device (HD-CONV-USB-260) to the top of the UC Presentation Transmitter. Connect the UC Engine or LAN to make a direct or network connection as described in step 1.

NOTE: If a longer cable between the UC Presentation Transmitter and the HD-CONV-USB-260 is needed, use a DigitalMedia™ Ultra cable only. The maximum supported cable length is 300 ft (91.4 m).

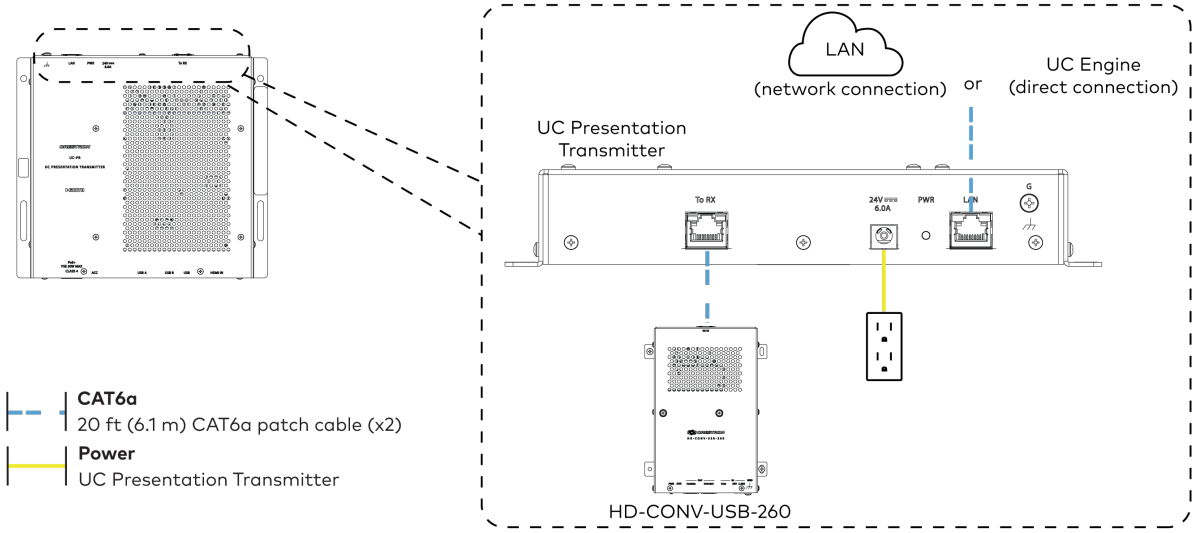

4. Connect the conference device using the included PoE+ injector and USB A to Micro-B cable to the bottom of the UC Presentation Transmitter.

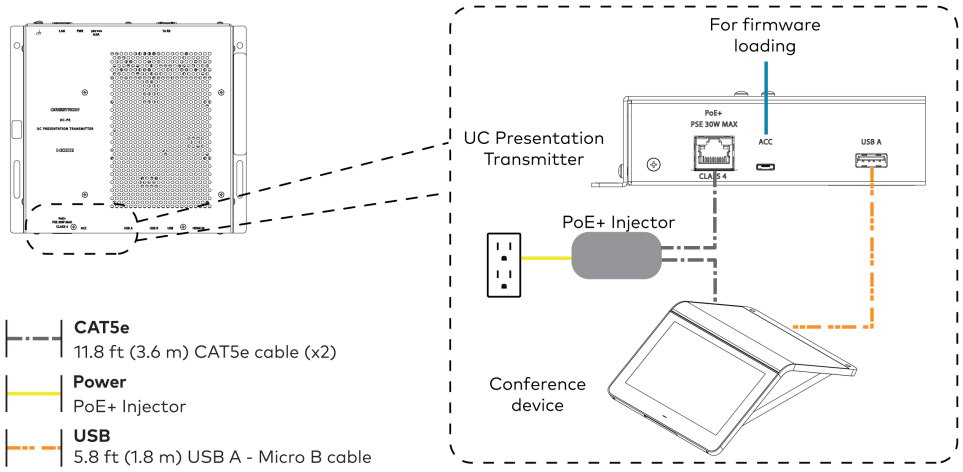

5. Connect a laptop to either the USB port or both the HDMI and USB B ports on the bottom of the UC Presentation Transmitter. Select a connection type based on the available ports on the user's laptop.

NOTES:

- If the USB port is used along with either the HDMI or USB B port, the UC Presentation Transmitter will communicate via the USB port by default.
- When connecting a laptop for BYOD presentation, select the audio source on the connected laptop.

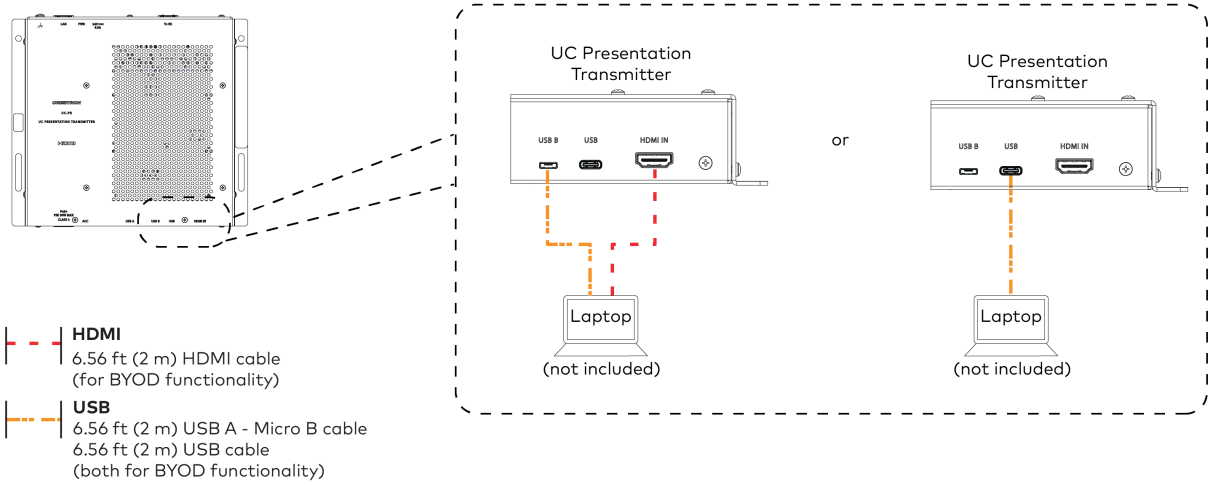

6. Bundle the cables to the bracket assembly with the integrated cable tie wraps. The cable tie wraps are reusable.

Apply Power

Press the power button on the bottom of the UC Engine and apply power to all of the other devices in the system.

Configure the Conference Device

1. On a computer, enter the IP address found in the conference device's settings into a web browser.

   > **NOTES:**
   > - The device and computer must be on the same network switch and VLAN.
   > - A login with administrative rights for the device is required.

2. Log in to the device and navigate to **DEVICE** > **Applications**.
3. Enter the following information in the appropriate fields:
   - **Teams Video PC Address**: Enter the IP address or hostname of the UC Engine.

     > **NOTE:** The hostname is printed on a label affixed to the UC Engine.

   - **Teams Video PC Port**: By default, port number 49500 is used. If a different port number has been configured on the UC Engine, enter that port number instead.
   - **Teams Video Username**: Enter the login username for the UC Engine. (The default username is "admin".)
   - **Teams Video Password**: Enter the login password for the UC Engine. (The default password is "sfb".)
4. Select **Save Changes**.

Configure the System

Use the conference device and your Microsoft Teams credentials to configure the UC Engine, as described in Configuration on page 296. For detailed information on deploying Microsoft Teams Rooms, refer to the Microsoft Teams Rooms documentation.

> **NOTE:** Microsoft Teams does not support emergency calling in Japan. For more information on emergency calling from Microsoft Teams, refer to Manage emergency calling.

Factory Reset

A factory reset may be performed when troubleshooting the conference device.

To perform a factory reset on the conference device:

1. Power cycle the device by disconnecting and reconnecting the CAT5e cable from the conference device.

2. When the device powers on and the LEDs flash green, tap the button below the Crestron® logo 10 times. A factory reset confirmation screen appears.

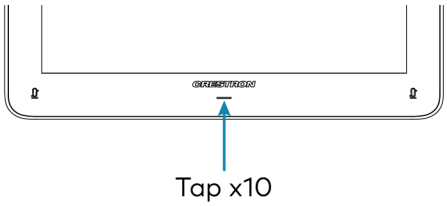

3. Tap one of the mute buttons to move the selector on the factory reset confirmation screen to **Yes**. Tap the button below the Crestron logo to confirm the factory reset.

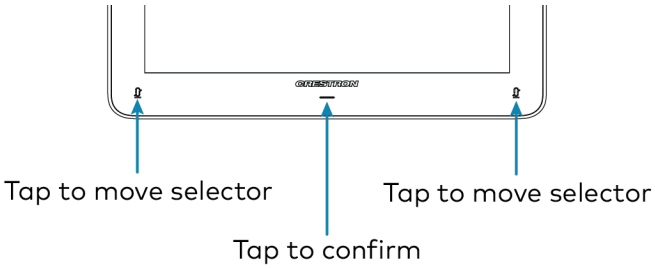

4. The device will reboot.

UC-MM30-NC-T and UC-MM30-NC-T-I

Minimum Requirements

Ensure that the below requirements are met prior to setting up the system.

- A certified USB Camera (not included).
- A video display (not included) connected to the UC Engine. A second display is optional.
- A Microsoft Teams Rooms provisioned account (not included).

> **NOTE:** Unless otherwise indicated in this section, the connection procedure is the same for UC-MM30-T and UC-MM30-T-I.

In The Box

Qty.	Description
	UC Bracket Assembly
1	UC Bracket Assembly with UC Engine and HDMI content ingest (UC-BRKT-200-S-T-ASSY, 6512689)
2	Anchor, Drywall, Plastic, 3/8 in. x 1/2 in. (9.5 mm x 12.7 mm) (2052565)
1	Key, Anchor (4529654)
2	Screw, 8-AB x 1-1/2 in. (38.1 mm), Pan Head, Combo (2052567)
4	Tie Wrap (2047935)
	Mini Tabletop Conference Device
1	Flex MM Tabletop Conference Device, Microsoft Teams video (6511613 or 6511614)
1	PoE+ Injector (2055605)
2	Cable, CAT5e, RJ-45 - RJ-45, 11.8 ft (3.6 m) (2056204)
1	Cable, USB 2.0, A - Micro B, 5.8 ft (1.8 m) (2055579)
	Additional Items
1	Cable, CAT6a, RJ-45 - RJ-45, 20 ft (6.1 m) (6507640)
1	Cable, CAT5e, RJ-45 - RJ-45, 7 ft (2.1 m) (6509924)
1	Cable, HDMI 2.1, 6 ft (1.8 m) (6512150)
1	Cable, HDMI, 20 ft (6.1 m) (6503567)
1	Cable, DisplayPort to HDMI, 6 ft (1.8 m) (6508282)
1	Cable, USB Extension, USB Type A Male-to-Female, 15 ft (4.6 m) (6508260)

Mount Devices

Mount the UC Bracket Assembly

Mount the UC Bracket Assembly to VESA® compliant display devices, a wall, or other building structure. Anchors and screws are supplied for installation on walls with 3/8 in. (9.5 mm) to 3/4 in. (19 mm) thickness.

CAUTION: Preinstalled screws may protrude from the back of the UC Bracket Assembly. Exercise caution when handling the UC Bracket Assembly to avoid scratching or damaging surfaces.

NOTE: The integrated cable tie wraps are reusable. Avoid damaging the cable tie wraps.

Mount the Tabletop Conference Device

The tabletop conference device can be placed on any flat surface or secured on a table using the UCA-SMK-UC2 or UCA-SMKR-UC2-3 tabletop swivel mount kit (sold separately). Refer to Quick Start: UC-2-T-V(-I) for functional details.

Identify the UC Bracket Assembly

The UC Bracket Assembly is available in two models. Identify the model included with your Crestron Flex system. Tap or click the corresponding image below to navigate to the appropriate connection instructions.

UC Bracket Assembly with HD-CONV-USB-200

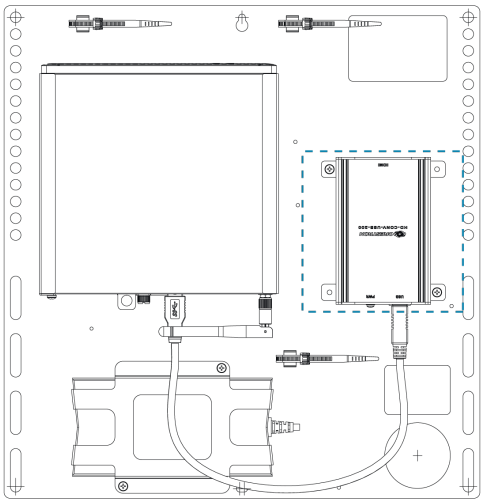

UC Bracket Assembly with HD-CONV-USB-300

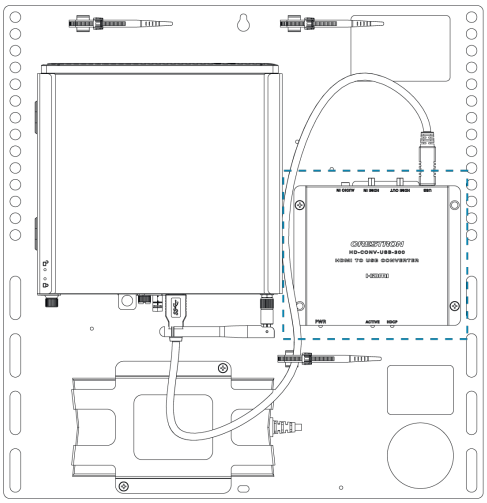

System Overview

For UC Bracket Assembly with HD-CONV-USB-200

When connections are complete, the system appears as shown below. Refer to Make Connections on page 207 for detailed connection instructions.

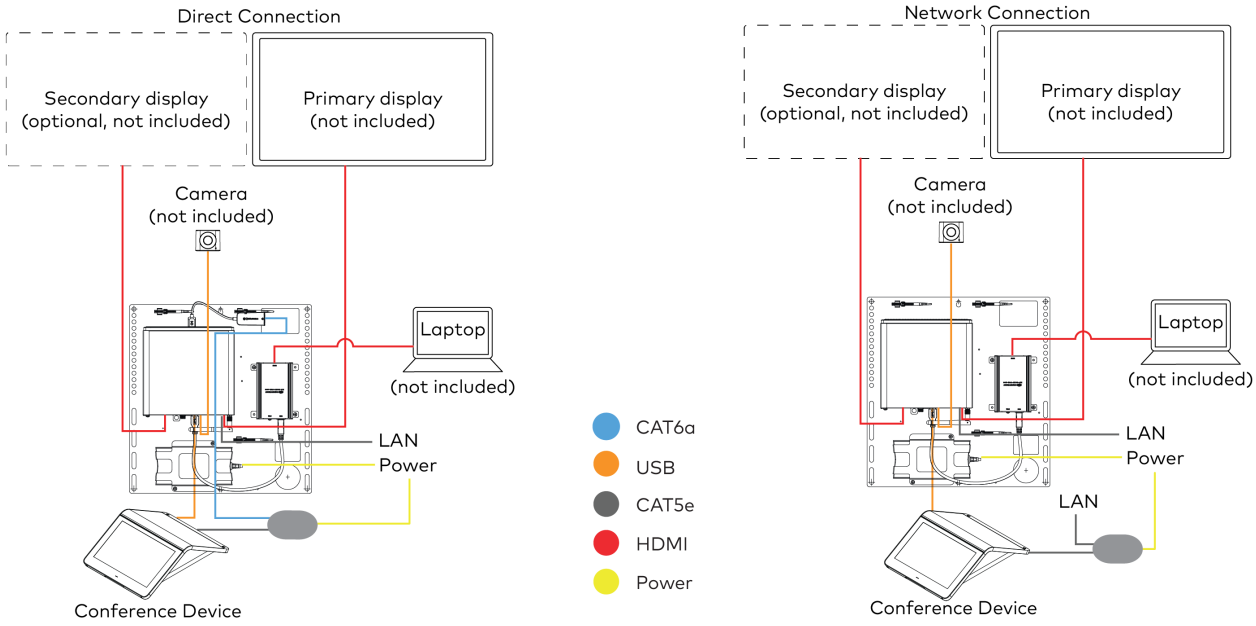

For UC Bracket Assembly with HD-CONV-USB-300

When connections are complete, the system appears as shown below. Refer to Make Connections on page 207 for detailed connection instructions.

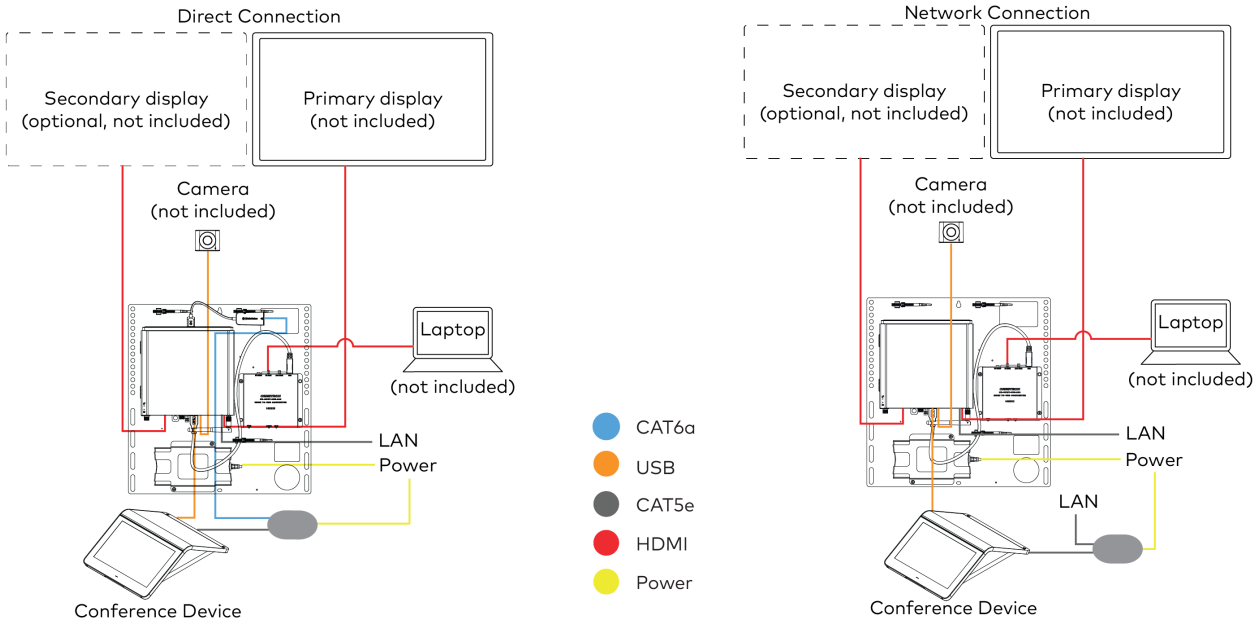

Make Connections

NOTE: For reference, the UC Bracket Assembly is shown with the HD-CONV-USB-200 in the following connection diagrams. Unless otherwise indicated in this guide, the connections remain the same for the UC Bracket Assembly with HD-CONV-USB-200 and HD-CONV-USB-300.

1. Make UC Engine connections as shown in the following illustrations. The conference device can communicate with the UC Engine over a direct connection or a network connection. Select one of the connection types as described below.
   - Make a direct connection for simple installation and setup. Only use the direct connect adapter to connect the conference device to the UC Engine. Do not use the direct connect adapter to connect the UC Engine to the network.

     Direct Connection

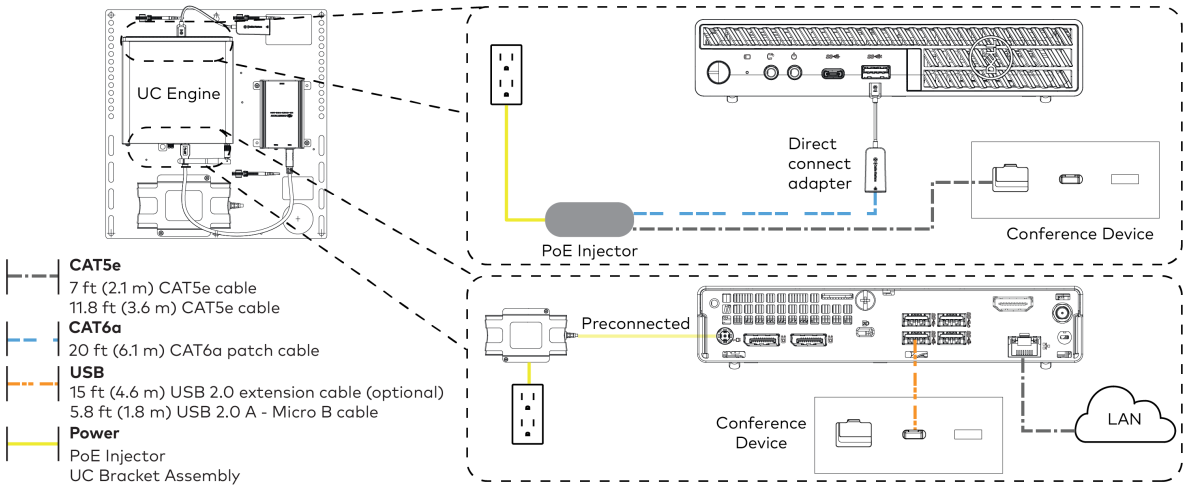

- Make a network connection if the system is to be managed by the XiO Cloud® service.

> **NOTE:** When a network connection is used, disconnect the direct connect adapter from the UC Engine.

Network Connection

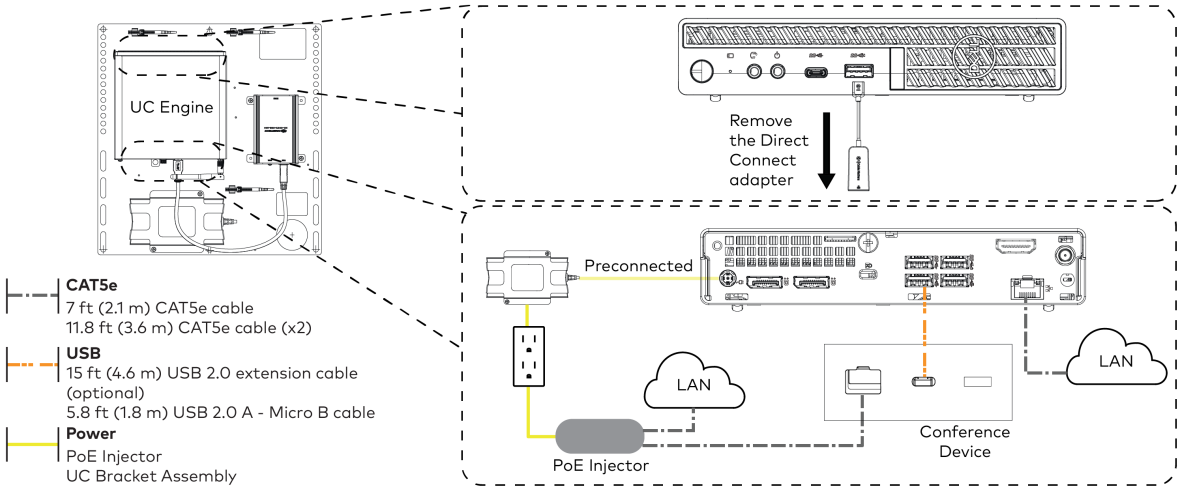

2. Connect displays to the UC Engine.

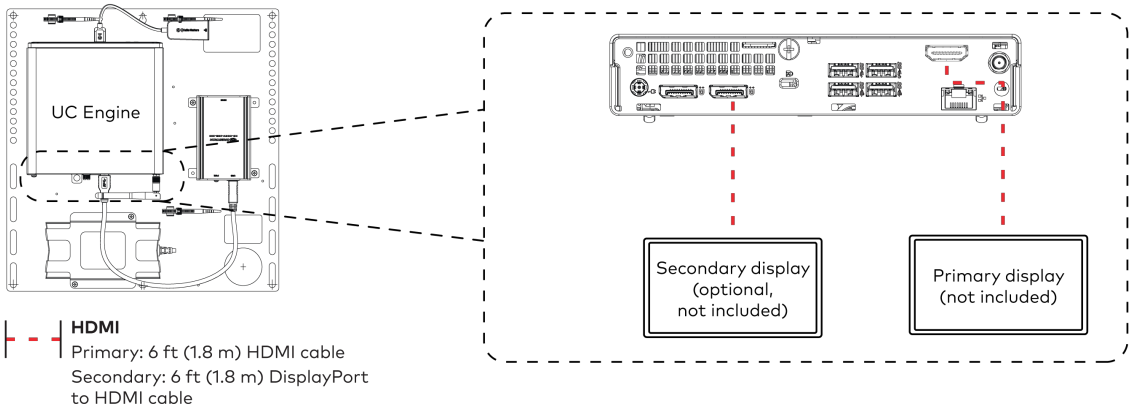

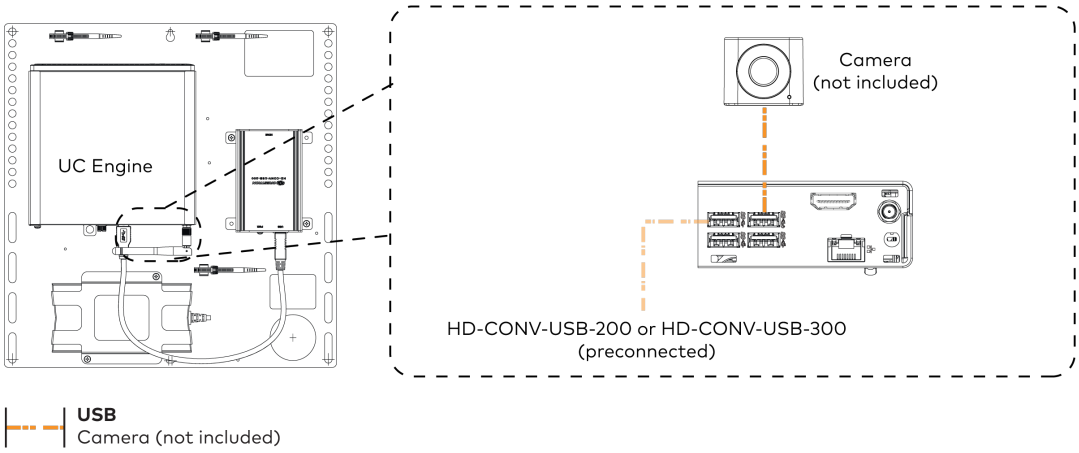

3. Connect a laptop to the HD-CONV-USB-200 or HD-CONV-USB-300.

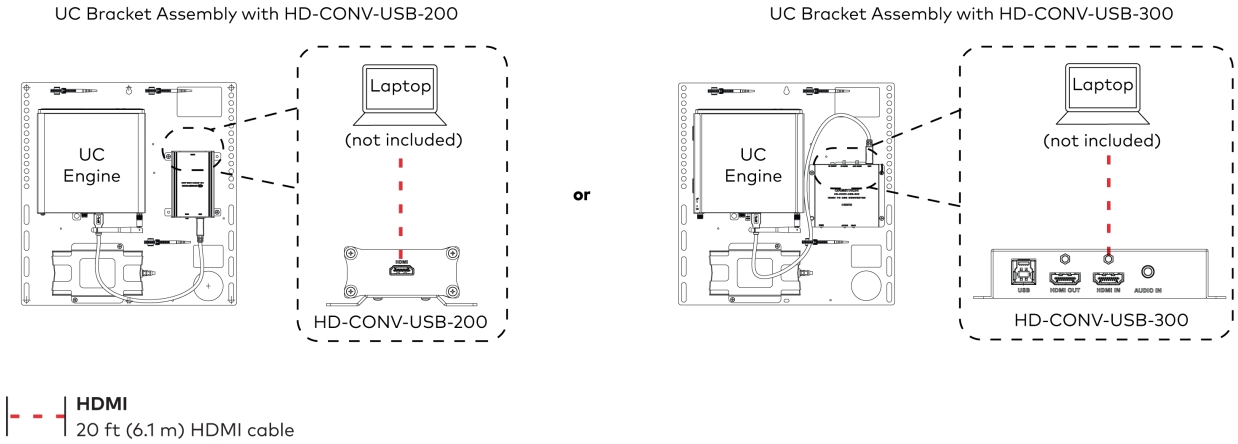

4. Bundle the cables to the bracket assembly with the integrated cable tie wraps. The cable tie wraps are reusable.

Apply Power

Press the power button on the bottom of the UC Engine and apply power to all of the other devices in the system.

Configure the Conference Device

> **NOTE:** If a Direct Connection was made between the conference device and the UC Engine, skip to Configure the System on page 210.

1. On a computer, enter the IP address found in the conference device's settings into a web browser.

   > **NOTES:**
   > - The device and computer must be on the same network switch and VLAN.
   > - A login with administrative rights for the device is required.

2. Log in to the device and navigate to **DEVICE** > **Applications**.
3. Enter the following information in the appropriate fields:
   - **Teams Video PC Address**: Enter the IP address or hostname of the UC Engine.

     > **NOTE:** The hostname is printed on a label affixed to the UC Engine.

   - **Teams Video PC Port**: By default, port number 49500 is used. If a different port number has been configured on the UC Engine, enter that port number instead.
   - **Teams Video Username**: Enter the login username for the UC Engine. (The default username is "admin".)
   - **Teams Video Password**: Enter the login password for the UC Engine. (The default password is "sfb".)
4. Select **Save Changes**.

Configure the System

Use the conference device and your Microsoft Teams credentials to configure the UC Engine, as described in Configuration on page 296. For detailed information on deploying Microsoft Teams Rooms, refer to the Microsoft Teams Rooms documentation.

> **NOTE:** Microsoft Teams does not support emergency calling in Japan. For more information on emergency calling from Microsoft Teams, refer to Manage emergency calling.

Factory Reset

A factory reset may be performed when troubleshooting the conference device.

To perform a factory reset on the conference device:

1. Power cycle the device by disconnecting and reconnecting the CAT5e cable from the conference device.
2. When the device powers on and the LEDs flash green, tap the button below the Crestron® logo 10 times. A factory reset confirmation screen appears.

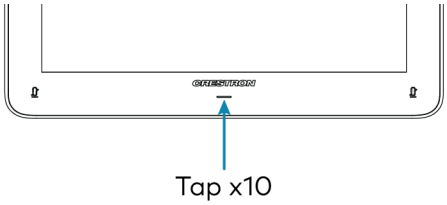

3. Tap one of the mute buttons to move the selector on the factory reset confirmation screen to **Yes**. Tap the button below the Crestron logo to confirm the factory reset.

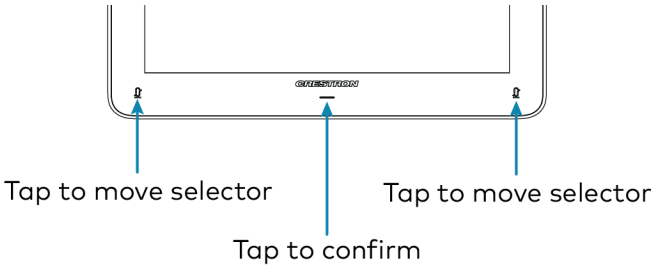

4. The device will reboot. Configure the device as described in Configure the Conference Device section.

UC-MMX30-NC-T and UC-MMX30-NC-T-I

Minimum Requirements

Ensure that the below requirements are met prior to setting up the system.

- A certified USB Camera (not included).
- A video display (not included) connected to the UC Engine. A second display is optional.
- A Microsoft Teams Rooms provisioned account (not included).

> **NOTE:** Unless otherwise indicated in this section, the connection procedure is the same for UC-MMX30-T and UC-MMX30-T-I.

In The Box

Qty.	Description
	UC Bracket Assembly
1	UC Bracket Assembly with UC Engine and HDMI or AV over CAT5 content ingest (UC-BRKT-260-P-T-ASSY, 6512691)
1	Power pack (2045870)
2	Anchor, Drywall, Plastic, 3/8 in. x 1/2 in. (9.5 mm x 12.7 mm) (2052565)
1	Key, Anchor (4529654)
2	Screw, 8-AB x 1-1/2 in. (38.1 mm), Pan Head, Combo (2052567)
4	Tie Wrap (2047935)
	UC Presentation Transmitter with Cable Organizer
1	Presentation transmitter (6510936)
1	Cable Organizer
1	Power pack (2056363) with cord (2001134)
1	Bracket, power supply (2056257)
1	Cable, USB to USB, 6.56 ft (2 m) (2056116)
1	Cable, HDMI®, 6.56 ft (2 m) (2056117)
1	Cable, USB 2.0, A to Micro B, 6.56 ft (2 m) (2055504)
8	Screw, 10-9 x 5/8 in. (15.9 mm), Pan Head, Phillips, Black (2054365)
	Mini Tabletop Conference Device
1	Flex MM Tabletop Conference Device, Microsoft Teams video (6511613 or 6511614)
1	PoE+ Injector (2055605)
2	Cable, CAT5e, RJ-45 - RJ-45, 11.8 ft (3.6 m) (2056204)
1	Cable, USB 2.0, A - Micro B, 5.8 ft (1.8 m) (2055579)
	Additional Items
2	Cable, CAT6a, RJ-45 - RJ-45, 20 ft (6.1 m) (6507640)
1	Cable, CAT5e, RJ-45 - RJ-45, 7 ft (2.1 m) (6509924)
1	Cable, HDMI 2.1, 6 ft (1.8 m) (6512150)
1	Cable, DisplayPort to HDMI, 6 ft (1.8 m) (6508282)

Mount Devices

Mount the UC Bracket Assembly

Mount the UC Bracket Assembly to VESA® compliant display devices, a wall, or other building structure. Anchors and screws are supplied for installation on walls with 3/8 in. (9.5 mm) to 3/4 in. (19 mm) thickness.

CAUTION: Preinstalled screws may protrude from the back of the UC Bracket Assembly. Exercise caution when handling the UC Bracket Assembly to avoid scratching or damaging surfaces.

NOTE: The integrated cable tie wraps are reusable. Avoid damaging the cable tie wraps.

Mount the UC Presentation Transmitter

Mount the UC Presentation Transmitter to the underside of a table using the supplied screws. The supplied screws support installation on tables with a thickness of 1 in. (25.4 mm) minimum.

Mount the Cable Organizer for the UC-PR

Mount the Cable Organizer according to the Cable Organizer for the UC-PR (Doc. 8966).

Mount the Tabletop Conference Device

The tabletop conference device can be placed on any flat surface or secured on a table using the UCA-SMK-UC2 or UCA-SMKR-UC2-3 tabletop swivel mount kit (sold separately). Refer to Quick Start: UC-2-T-V(-I) for functional details.

System Overview

When connections are complete, the system appears as shown below. The laptop connections shown below may vary based on the selected connection method. Refer to Make Connections on page 215 for detailed connection instructions.

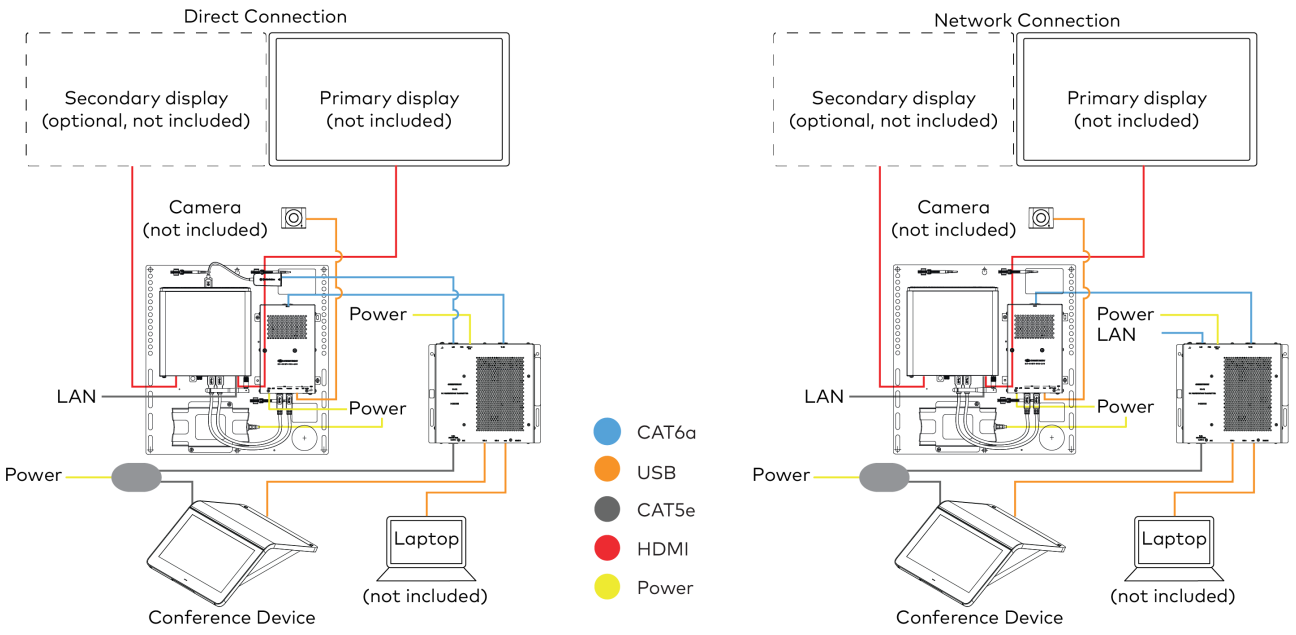

Make Connections

1. Make UC Engine connections as shown in the following illustrations. The UC Presentation Transmitter can communicate with the UC Engine over a direct connection or a network connection. Select one of the connection types as described below.
   - Make a direct connection for simple installation and setup. Only use the direct connect adapter to connect the UC Presentation Transmitter to the UC Engine. Do not use the direct connect adapter to connect the UC Engine to the network.

     Direct Connection

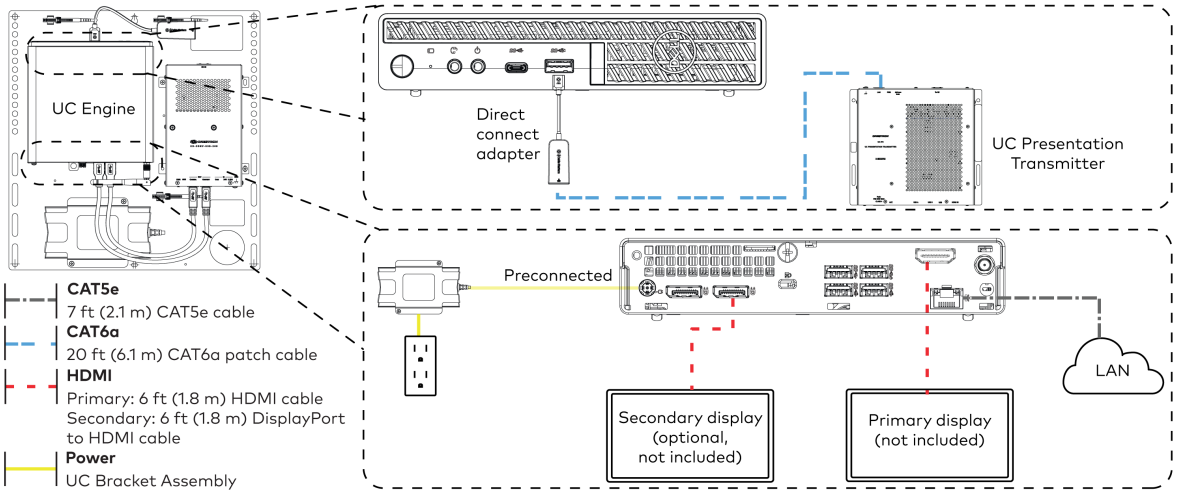

   - Make a network connection if the system is to be managed by the XiO Cloud® service.

> **NOTE:** When a network connection is used, disconnect the direct connect adapter from the UC Engine.

Network Connection

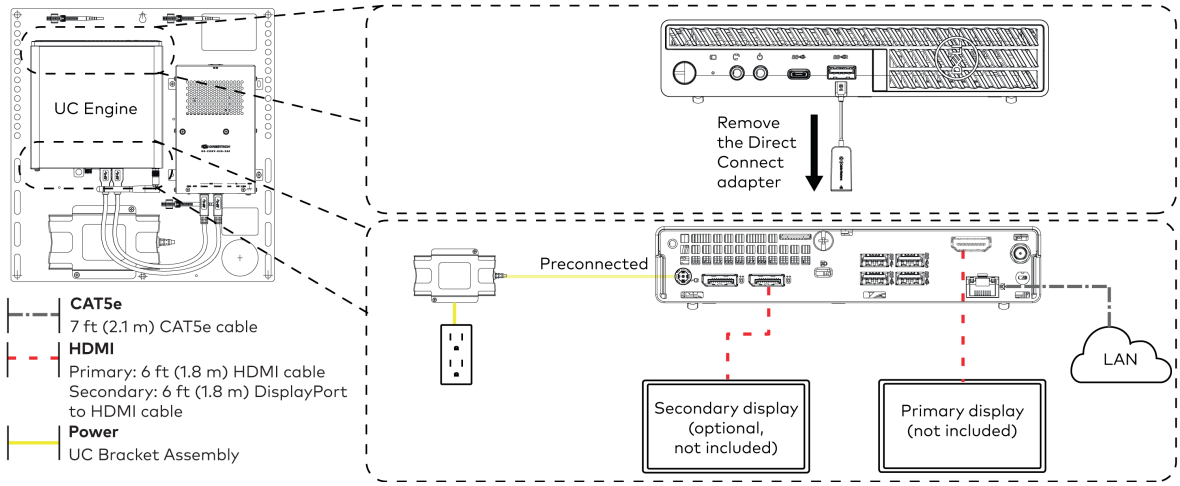

2. Connect the power supply and camera (not included) to the bottom of the content ingest device (HD-CONV-USB-260). Connect the power supply to an AC power outlet.

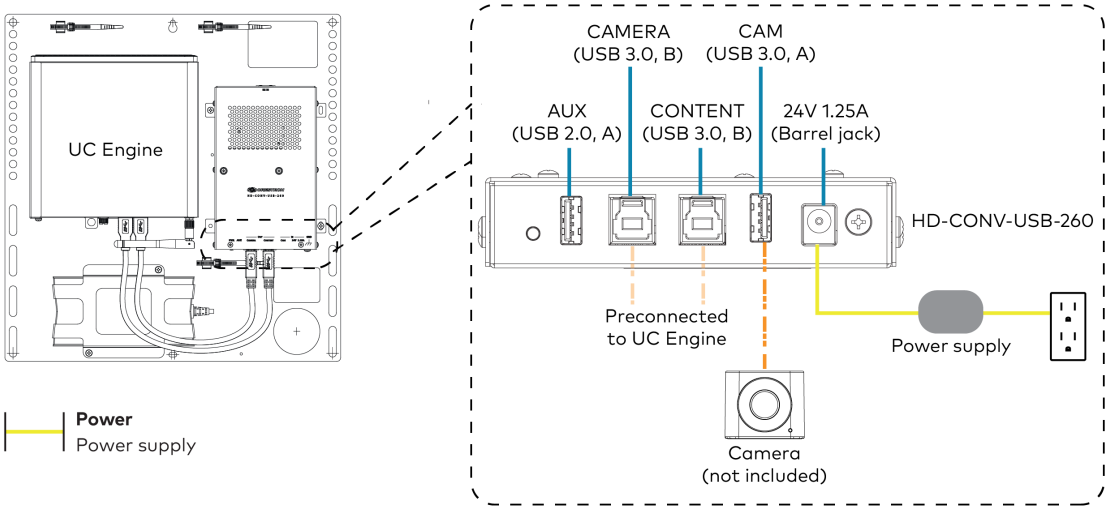

3. Connect power and the content ingest device (HD-CONV-USB-260) to the top of the UC Presentation Transmitter. Connect the UC Engine or LAN to make a direct or network connection as described in step 1.

NOTE: If a longer cable between the UC Presentation Transmitter and the HD-CONV-USB-260 is needed, use a DigitalMedia™ Ultra cable only. The maximum supported cable length is 300 ft (91.4 m).

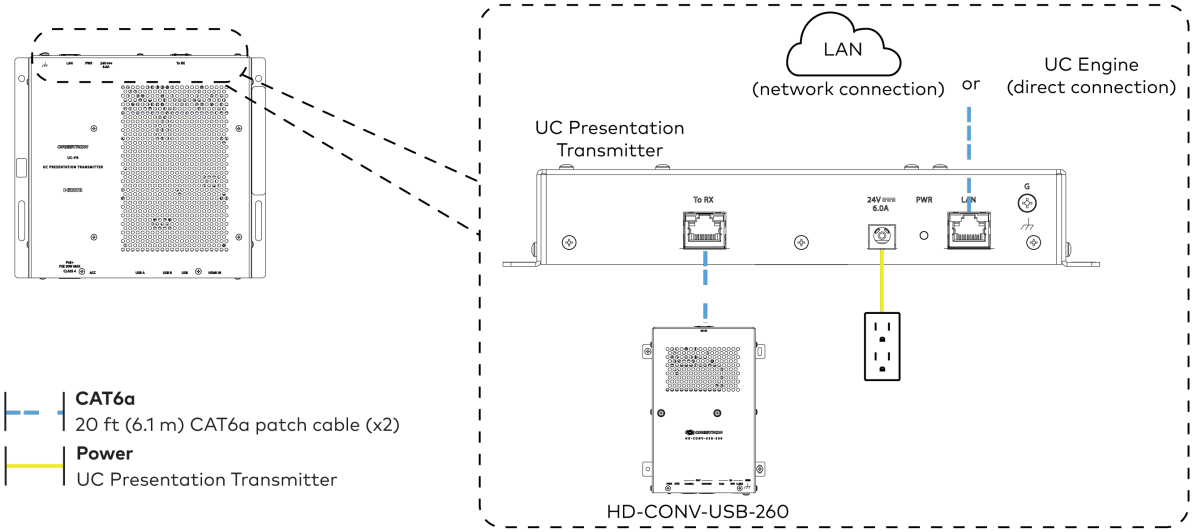

4. Connect the conference device using the included PoE+ injector and USB A to Micro-B cable to the bottom of the UC Presentation Transmitter.

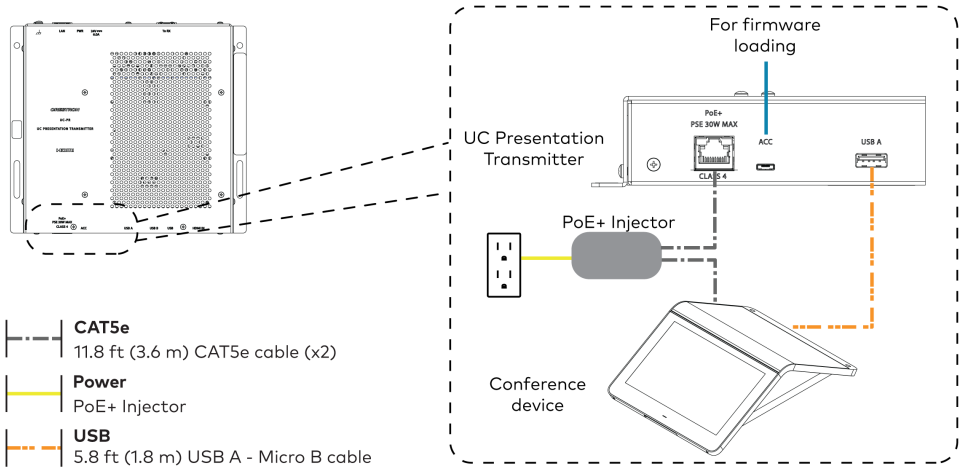

5. Connect a laptop to either the USB port or both the HDMI and USB B ports on the bottom of the UC Presentation Transmitter. Select a connection type based on the available ports on the user's laptop.

NOTES:

- If the USB port is used along with either the HDMI or USB B port, the UC Presentation Transmitter will communicate via the USB port by default.
- When connecting a laptop for BYOD presentation, select the audio source on the connected laptop.

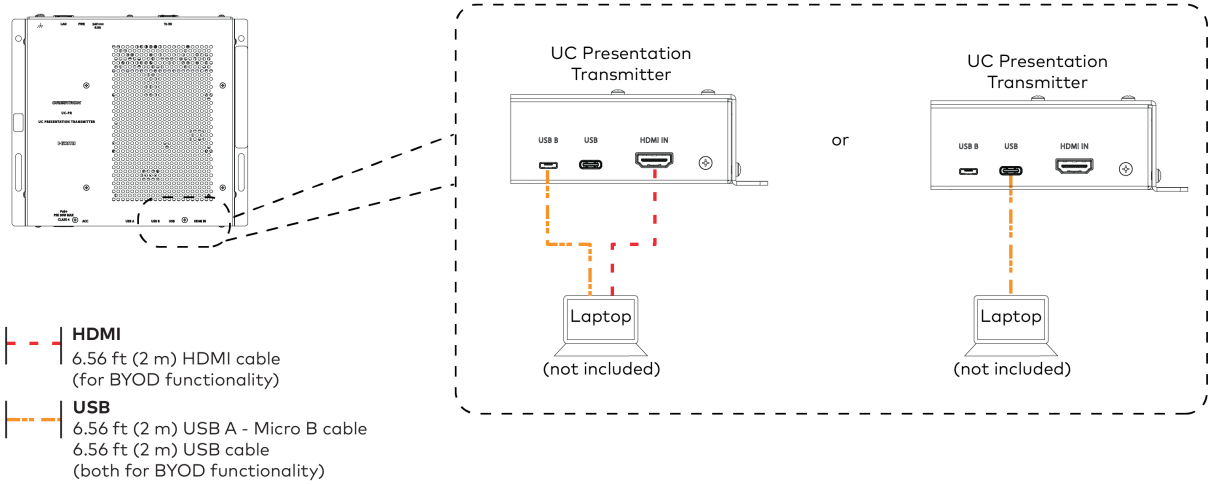

6. Bundle the cables to the bracket assembly with the integrated cable tie wraps. The cable tie wraps are reusable.

Apply Power

Press the power button on the bottom of the UC Engine and apply power to all of the other devices in the system.

Configure the Conference Device

1. On a computer, enter the IP address found in the conference device's settings into a web browser.

   > **NOTES:**
   > - The device and computer must be on the same network switch and VLAN.
   > - A login with administrative rights for the device is required.

2. Log in to the device and navigate to **DEVICE** > **Applications**.
3. Enter the following information in the appropriate fields:
   - **Teams Video PC Address**: Enter the IP address or hostname of the UC Engine.

     > **NOTE:** The hostname is printed on a label affixed to the UC Engine.

   - **Teams Video PC Port**: By default, port number 49500 is used. If a different port number has been configured on the UC Engine, enter that port number instead.
   - **Teams Video Username**: Enter the login username for the UC Engine. (The default username is "admin".)
   - **Teams Video Password**: Enter the login password for the UC Engine. (The default password is "sfb".)
4. Select **Save Changes**.

Configure the System

Use the conference device and your Microsoft Teams credentials to configure the UC Engine, as described in Configuration on page 296. For detailed information on deploying Microsoft Teams Rooms, refer to the Microsoft Teams Rooms documentation.

> **NOTE:** Microsoft Teams does not support emergency calling in Japan. For more information on emergency calling from Microsoft Teams, refer to Manage emergency calling.

Factory Reset

A factory reset may be performed when troubleshooting the conference device.

To perform a factory reset on the conference device:

1. Power cycle the device by disconnecting and reconnecting the CAT5e cable from the conference device.

2. When the device powers on and the LEDs flash green, tap the button below the Crestron® logo 10 times. A factory reset confirmation screen appears.

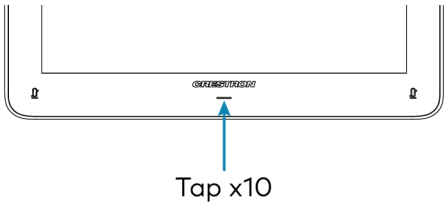

3. Tap one of the mute buttons to move the selector on the factory reset confirmation screen to **Yes**. Tap the button below the Crestron logo to confirm the factory reset.

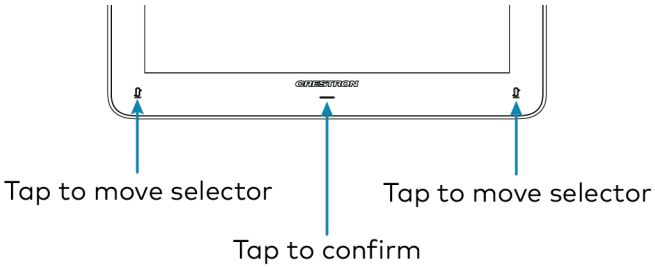

4. The device will reboot.

UC-M50-T

Minimum Requirements

Ensure that the below requirements are met prior to setting up the system.

- A video display (not included) connected to the UC Engine. A second display is optional.
- A Microsoft Teams Rooms provisioned account (not included).

In The Box

Qty.	Description
	UC Bracket Assembly
1	UC Bracket Assembly with UC Engine and HDMI content ingest (UC-BRKT-200-S-T-ASSY, 6512689)
2	Anchor, Drywall, Plastic, 3/8 in. x 1/2 in. (9.5 mm x 12.7 mm) (2052565)
1	Key, Anchor (4529654)
2	Screw, 8-AB x 1-1/2 in. (38.1 mm), Pan Head, Combo (2052567)
4	Tie Wrap (2047935)
	Mercury Tabletop Conference Device
1	Tabletop Conference Device, Microsoft Teams video (6510716)
1	Cable, CAT5e, RJ-45 - RJ-45, 12 ft (3.7 m) (2033988)
1	Cable Retention Plate (2047908)
3	Tie Wrap (2047935)
	CCS-CAM-USB-F-400 Collaboration Camera
1	Collaboration camera (6510482)
1	Camera wall mount kit (6510998)
	Additional Items
1	Cable, CAT6a, RJ-45 - RJ-45, 20 ft (6.1 m) (6507640)
1	Cable, CAT5e, RJ-45 - RJ-45, 7 ft (2.1 m) (6509924)
1	Cable, HDMI 2.1, 6 ft (1.8 m) (6512150)
1	Cable, HDMI, 20 ft (6.1 m) (6503567)
1	Cable, DisplayPort to HDMI, 6 ft (1.8 m) (6508282)
1	Cable, USB Extension, USB Type A Male-to-Female, 15 ft (4.6 m) (6508260)
1	Cable, USB 3.0, Right angle USB-C to A, 6 ft (1.8 m) (6511591)
1	Cable, USB 2.0, A - Micro-B, 6 ft (1.8 m) (6510947)
1	Power supply (6500187)

Mount Devices

Mount the UC Bracket Assembly

Mount the UC Bracket Assembly to VESA® compliant display devices, a wall, or other building structure. Anchors and screws are supplied for installation on walls with 3/8 in. (9.5 mm) to 3/4 in. (19 mm) thickness.

CAUTION: Preinstalled screws may protrude from the back of the UC Bracket Assembly. Exercise caution when handling the UC Bracket Assembly to avoid scratching or damaging surfaces.

NOTE: The integrated cable tie wraps are reusable. Avoid damaging the cable tie wraps.

Mount the Camera

Mount the included camera according to the UC-CAM-WMK Quick Start (Doc. 8257).

Mount the Tabletop Conference Device

The tabletop conference device can be placed on any flat surface or secured on a table using the CCS-UCA-SMK tabletop swivel mount kit (sold separately).

Install the Cable Retention Plate

The included cable retention plate provides tie-down points for cables that connect to the Crestron® conference device.

Remove the adhesive backing from the cable retention plate and install the plate on the underside of the conference device as shown in the following diagram. Ensure the cable retention plate is firmly attached before securing cables.

CAUTION: When turning over the device, place the device on a soft surface to avoid damage.

NOTE: If a swivel mount kit (CCS-UCA-SMK) is to be used, use the cable retention bracket included with the swivel mount kit as described in the CCS-UCA-SMK DO Guide (Doc. 7882).

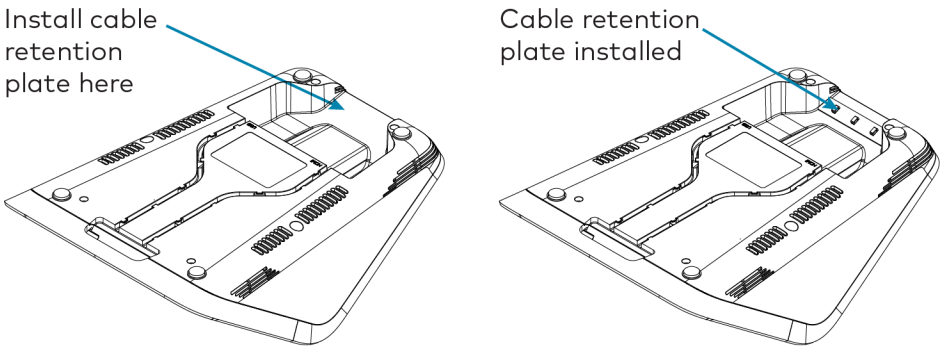

Identify the UC Bracket Assembly

The UC Bracket Assembly is available in two models. Identify the model included with your Crestron Flex system. Tap or click the corresponding image below to navigate to the appropriate connection instructions.

UC Bracket Assembly with HD-CONV-USB-200

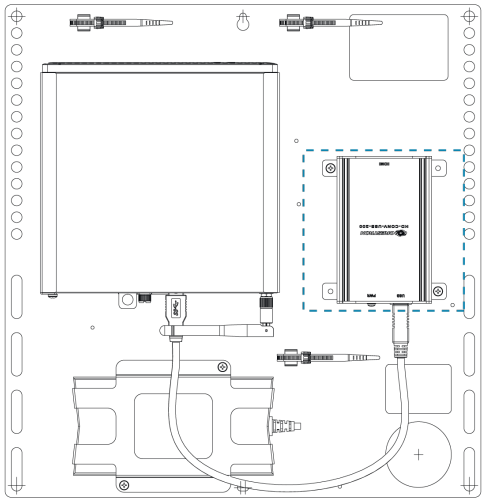

UC Bracket Assembly with HD-CONV-USB-300

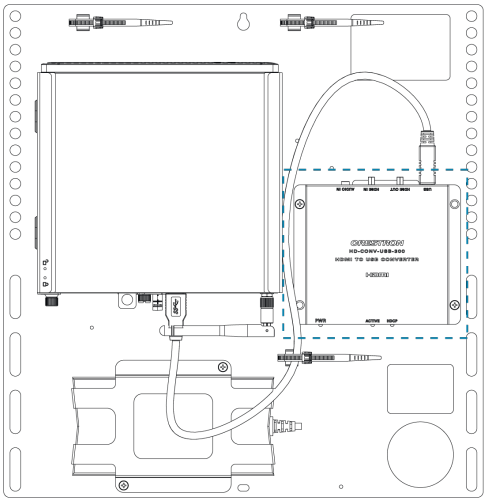

System Overview

For UC Bracket Assembly with HD-CONV-USB-200

When connections are complete, the system appears as shown below. Refer to Make Connections on page 224 for detailed connection instructions.

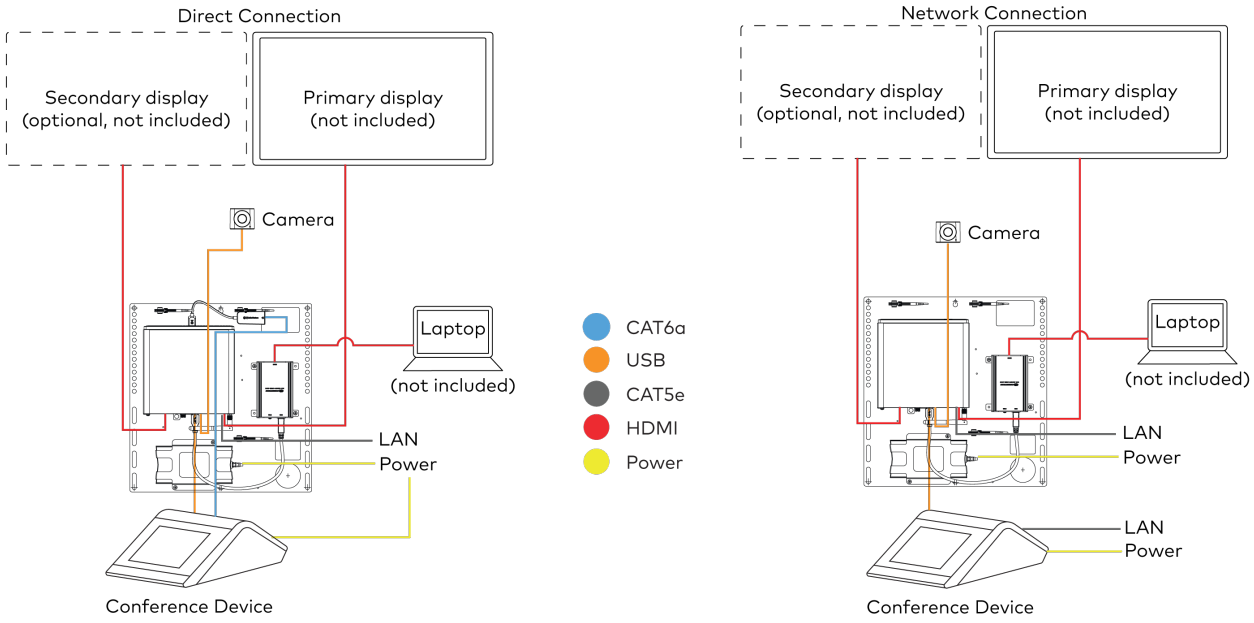

For UC Bracket Assembly with HD-CONV-USB-300

When connections are complete, the system appears as shown below. Refer to Make Connections on page 224 for detailed connection instructions.

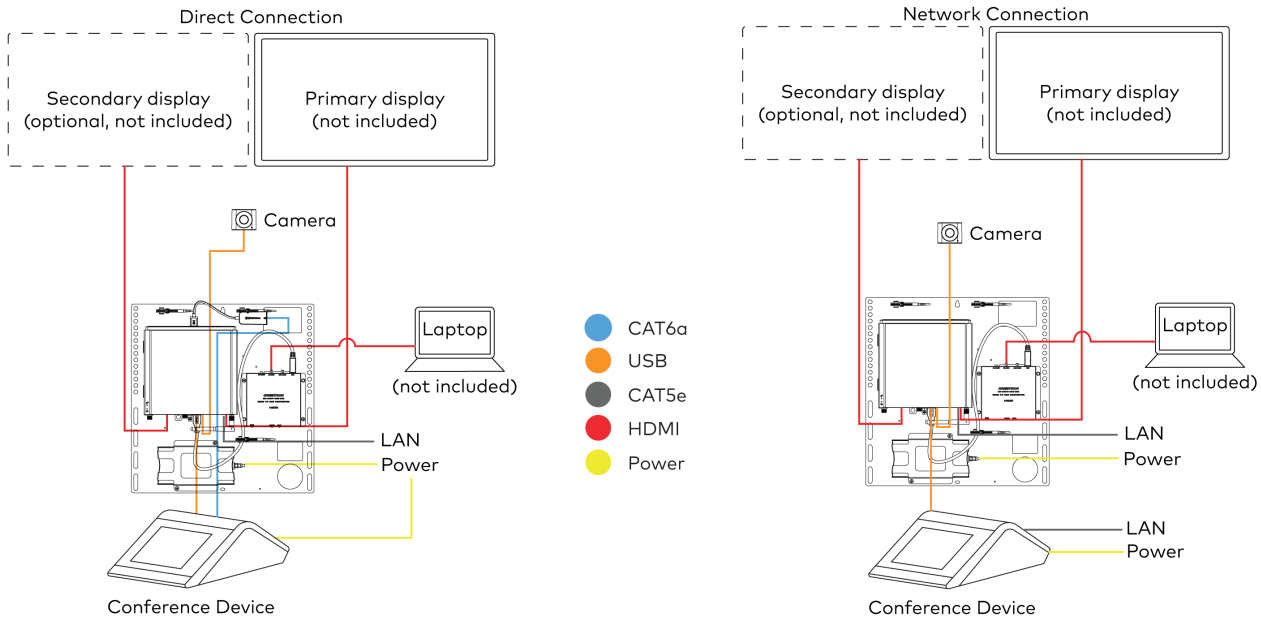

Make Connections

NOTE: For reference, the UC Bracket Assembly is shown with the HD-CONV-USB-200 in the following connection diagrams. Unless otherwise indicated in this guide, the connections remain the same for the UC Bracket Assembly with HD-CONV-USB-200 and HD-CONV-USB-300.

1. Make UC Engine connections as shown in the following illustrations. The conference device can communicate with the UC Engine over a direct connection or a network connection. Select one of the connection types as described below.
   - Make a direct connection for simple installation and setup. Only use the direct connect adapter to connect the conference device to the UC Engine. Do not use the direct connect adapter to connect the UC Engine to the network.

     Direct Connection

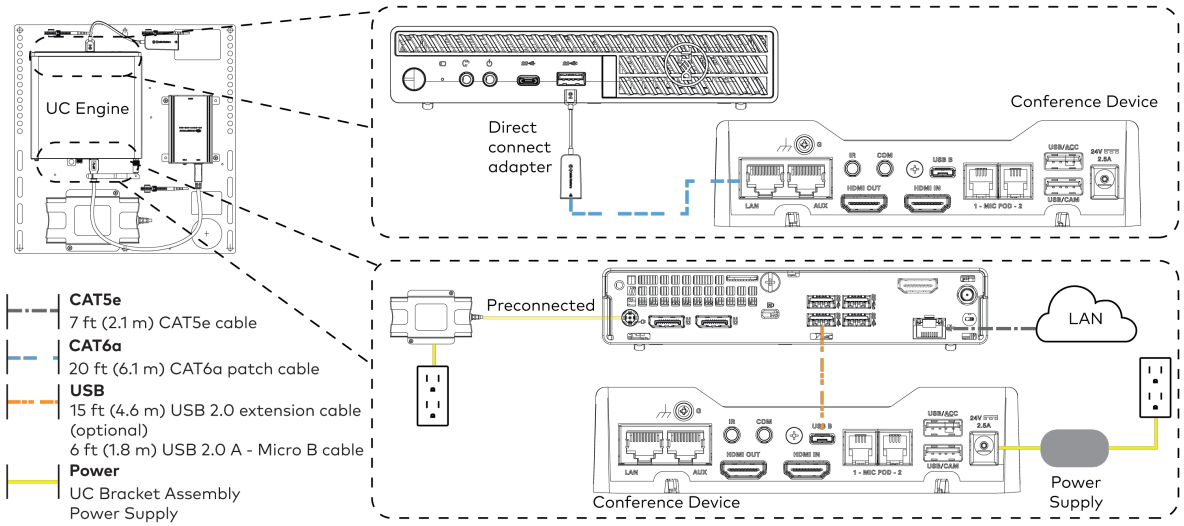

   - Make a network connection if the system is to be managed by the XiO Cloud® service.

     NOTE: When a network connection is used, disconnect the direct connect adapter from the UC Engine.

     Network Connection

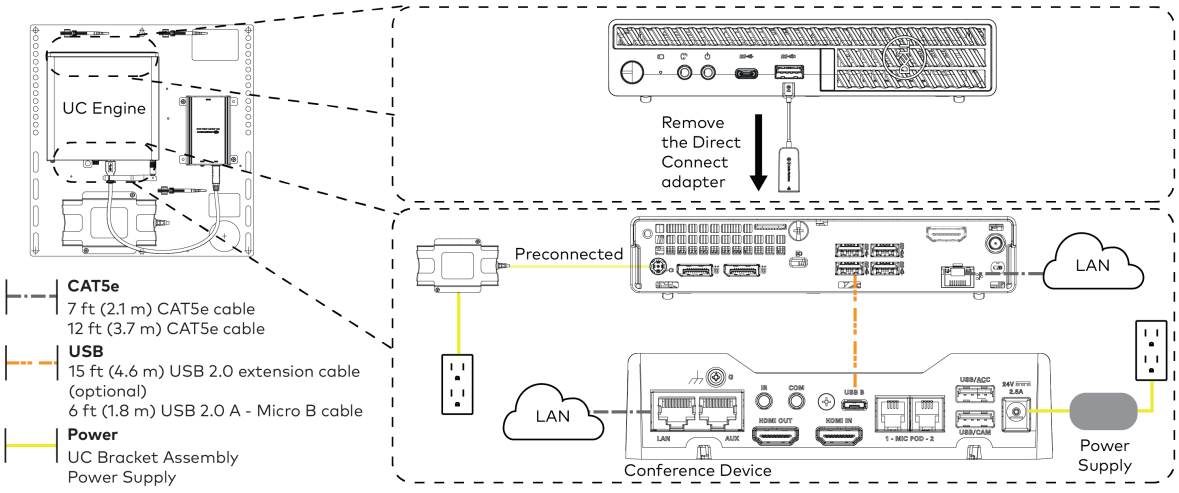

2. Connect displays to the UC Engine.

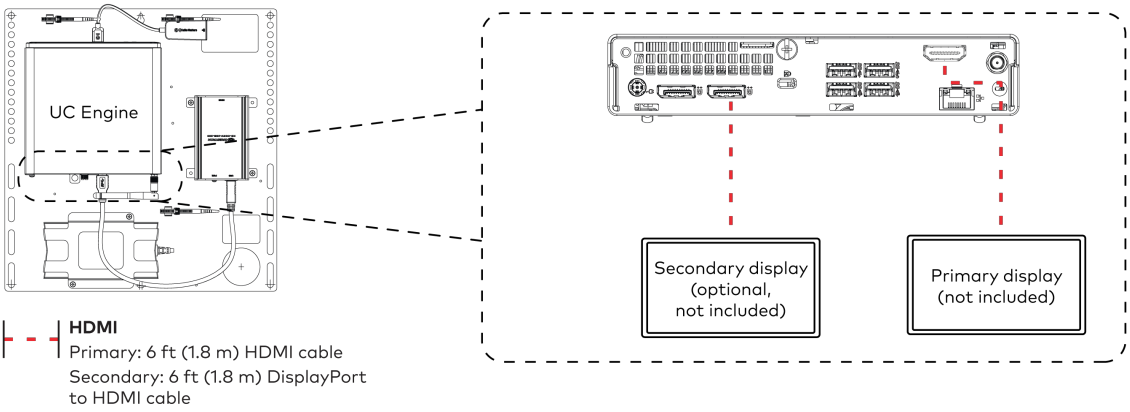

HDMI
Primary: 6 ft (1.8 m) HDMI cable
Secondary: 6 ft (1.8 m) DisplayPort to HDMI cable

3. Connect the camera to the UC Engine as shown in the image below. Do not connect the camera to any of the other USB ports.

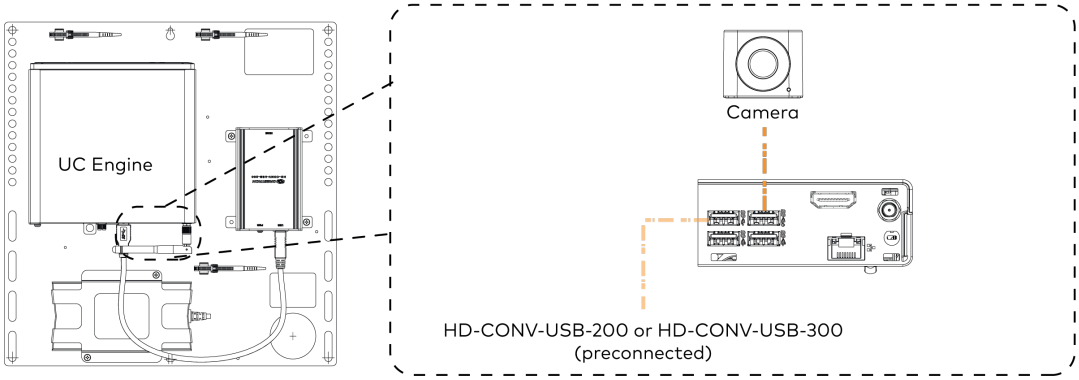

USB
6 ft (1.8 m) USB 3.0, right angle USB-C to A

4. Connect a laptop to the HD-CONV-USB-200 or HD-CONV-USB-300.

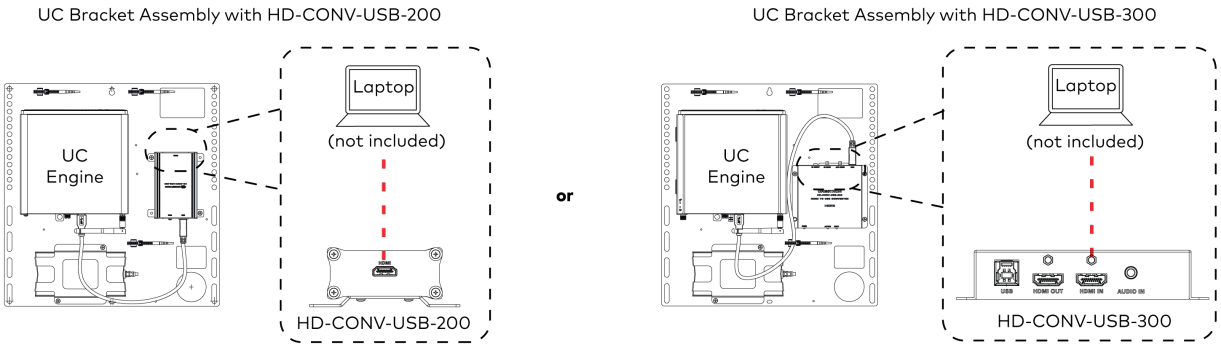

HDMI
20 ft (6.1 m) HDMI cable

5. Bundle the cables to the bracket assembly with the integrated cable tie wraps. The cable tie wraps are reusable.

Bundle Cables

Bundle the cables together and use a provided tie wrap to secure the bundle to one of the positions on the cable retention plate at the rear of the device. Avoid bundling power and data cables together.

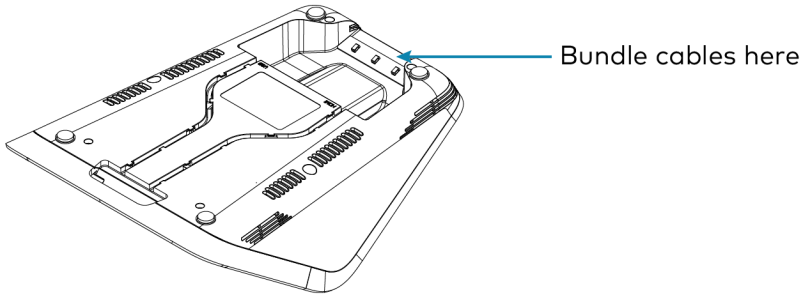

Apply Power

Press the power button on the bottom of the UC Engine and apply power to all of the other devices in the system. The conference device will display its IP address.

Configure the Conference Device

> **NOTE:** If a Direct Connection was made between the conference device and the UC Engine, skip to Configure the System on page 228.

1. On a computer, enter the IP address displayed on the conference device into a web browser.

   > **NOTES:**
   > - The device and computer must be on the same network switch and VLAN.
   > - A login with administrative rights for the device is required.

2. Log in to the device and navigate to **DEVICE** > **Applications**.
3. Enter the following information in the appropriate fields:
   - **Teams Video PC Address**: Enter the IP address or hostname of the UC Engine.

     > **NOTE:** The hostname is printed on a label affixed to the UC Engine.

   - **Teams Video PC Port**: By default, port number 49500 is used. If a different port number has been configured on the UC Engine, enter that port number instead.
   - **Teams Video Username**: Enter the login username for the UC Engine. (The default username is "admin".)
   - **Teams Video Password**: Enter the login password for the UC Engine. (The default password is "sfb".)
4. Select **Save Changes**.

Configure the System

Use the conference device and your Microsoft Teams credentials to configure the UC Engine, as described in Configuration on page 296. For detailed information on deploying Microsoft Teams Rooms, refer to the Microsoft Teams Rooms documentation.

UC-MX50-T

Minimum Requirements

Ensure that the below requirements are met prior to setting up the system.

- A video display (not included) connected to the UC Engine. A second display is optional.
- A Microsoft Teams Rooms provisioned account (not included).

In The Box

Qty.	Description
	UC Bracket Assembly
1	UC Bracket Assembly with UC Engine and HDMI or AV over CAT5 content ingest (UC-BRKT-260-P-T-ASSY, 6512691)
1	Power pack (2045870)
2	Anchor, Drywall, Plastic, 3/8 in. x 1/2 in. (9.5 mm x 12.7 mm) (2052565)
1	Key, Anchor (4529654)
2	Screw, 8-AB x 1-1/2 in. (38.1 mm), Pan Head, Combo (2052567)
4	Tie Wrap (2047935)
	Mercury X Tabletop Conference Device
1	Tabletop Conference Device, Microsoft Teams video (6511747)
1	Cable, CAT5e, RJ-45 - RJ-45, 12 ft (3.7 m) (2033988)
1	Cable Retention Plate (2047908)
1	Power supply (2045873) with cord (2042043)
3	Tie Wrap (2047935)
	CCS-CAM-USB-F-400 Collaboration Camera
1	Collaboration camera (6510482)
1	Camera wall mount kit (6510998)
	Additional Items
2	Cable, CAT6a, RJ-45 - RJ-45, 20 ft (6.1 m) (6507640)
1	Cable, CAT5e, RJ-45 - RJ-45, 7 ft (2.1 m) (6509924)
1	Cable, HDMI 2.1, 6 ft (1.8 m) (6512150)
1	Cable, DisplayPort to HDMI, 6 ft (1.8 m) (6508282)
1	Cable, USB 3.0, Right angle USB-C to A, 6 ft (1.8 m) (6511591)
1	Cable, USB 2.0, A - Micro-B, 6 ft (1.8 m) (6510947)
1	Cable, thin HDMI, 6 ft (1.8 m) (6510946)

Mount Devices

Mount the UC Bracket Assembly

Mount the UC Bracket Assembly to VESA® compliant display devices, a wall, or other building structure. Anchors and screws are supplied for installation on walls with 3/8 in. (9.5 mm) to 3/4 in. (19 mm) thickness.

CAUTION: Preinstalled screws may protrude from the back of the UC Bracket Assembly. Exercise caution when handling the UC Bracket Assembly to avoid scratching or damaging surfaces.

NOTE: The integrated cable tie wraps are reusable. Avoid damaging the cable tie wraps.

Mount the Camera

Mount the included camera according to the UC-CAM-WMK Quick Start (Doc. 8257).

Mount the Tabletop Conference Device

The tabletop conference device can be placed on any flat surface or secured on a table using the CCS-UCA-SMK tabletop swivel mount kit (sold separately).

System Overview

When connections are complete, the system appears as shown below. Refer to Make Connections on page 232 for detailed connection instructions.

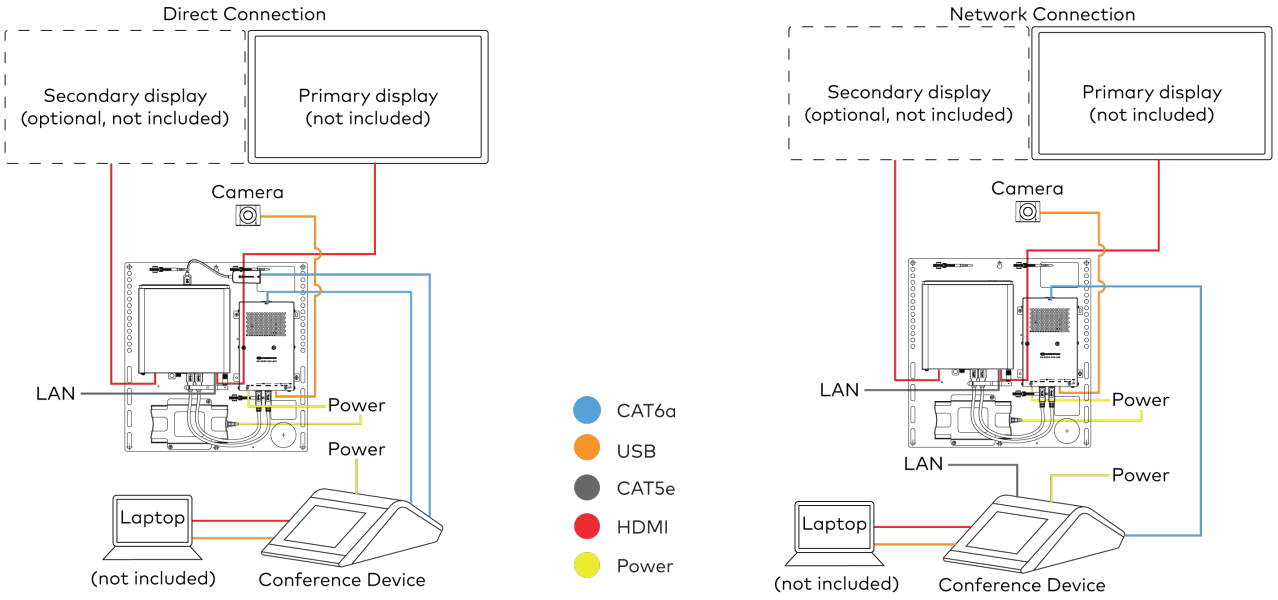

Make Connections

1. Make UC Engine connections as shown in the following illustrations. The conference device can communicate with the UC Engine over a direct connection or a network connection. Select one of the connection types as described below.
   - Make a direct connection for simple installation and setup. Only use the direct connect adapter to connect the conference device to the UC Engine. Do not use the direct connect adapter to connect the UC Engine to the network.

     Direct Connection

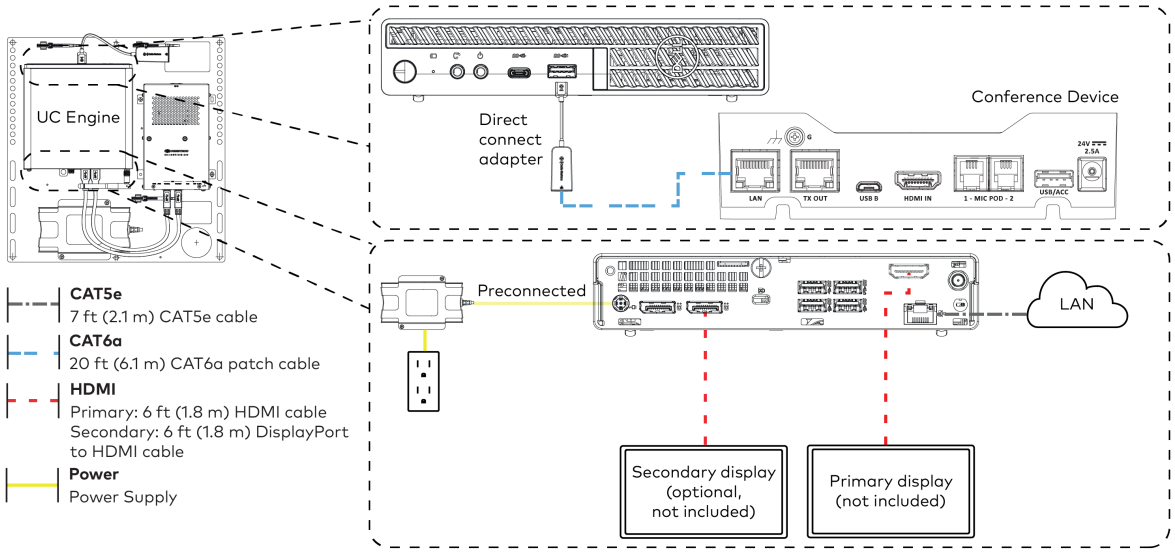

   - Make a network connection if the system is to be managed by the XiO Cloud® service.

     > **NOTE:** When a network connection is used, disconnect the direct connect adapter from the UC Engine.

     Network Connection

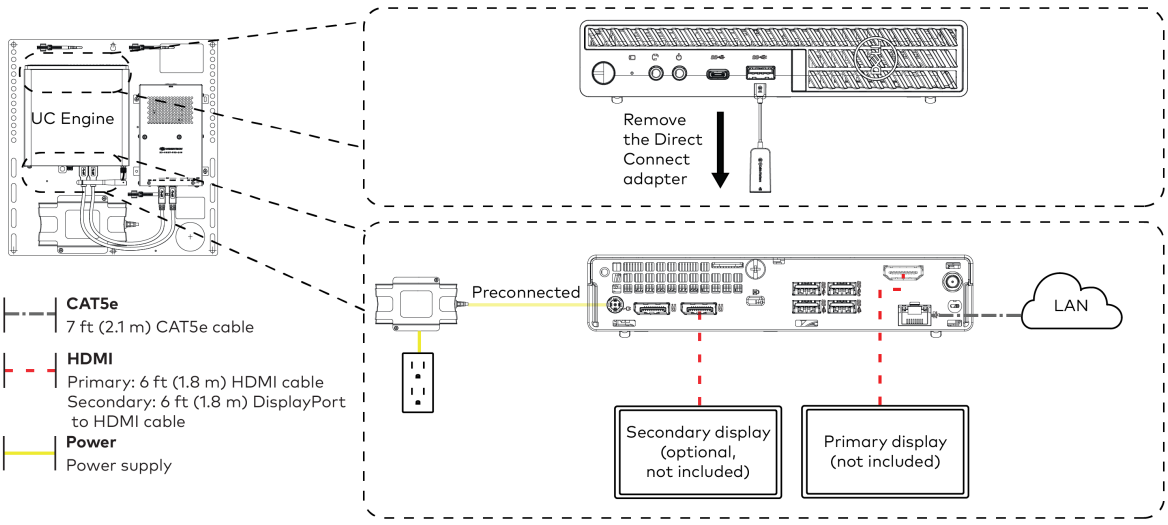

2. Make a network or direct connection on the bottom of the conference device as described in step 1. Make the remaining content ingest, laptop, and power connections. Connect the conference device's power supply to an AC power outlet.

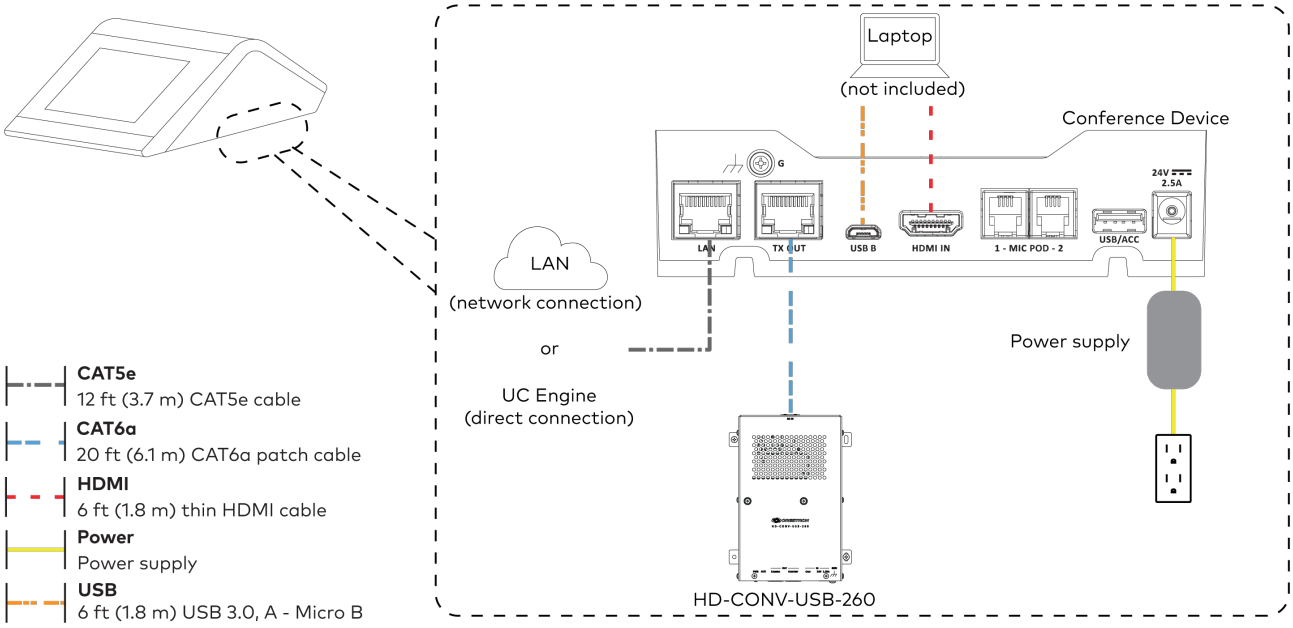

3. Connect the power supply and camera to the bottom of the content ingest device (HD-CONV-USB-260). Connect the power supply to an AC power outlet.

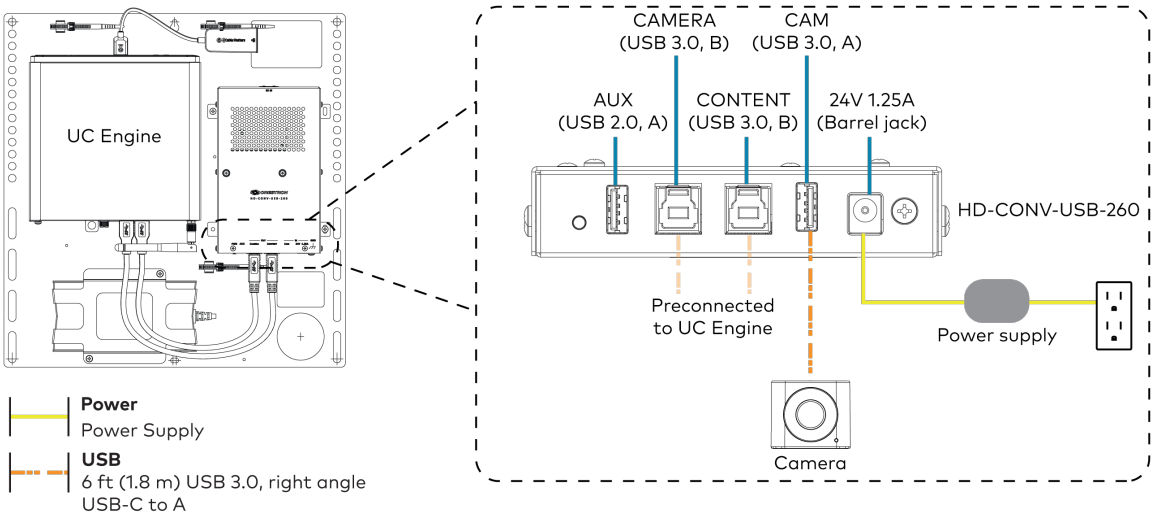

4. Bundle the cables to the bracket assembly with the integrated cable tie wraps. The cable tie wraps are reusable.

Apply Power

Press the power button on the bottom of the UC Engine and apply power to all of the other devices in the system.

Configure the Conference Device

1. On a computer, enter the IP address displayed on the conference device into a web browser to configure the device to operate in Teams Video mode.

   NOTES:

   - The device and computer must be on the same network switch and VLAN.
   - A login with administrative rights for the device is required.

2. Log in to the device and navigate to **DEVICE** > **Applications**.

3. Enter the following information in the appropriate fields:
    - **Teams Video PC Address**: Enter the IP address or hostname of the UC Engine.

      > **NOTE:** The hostname is printed on a label affixed to the UC Engine.

    - **Teams Video PC Port**: By default, port number 49500 is used. If a different port number has been configured on the UC Engine, enter that port number instead.
    - **Teams Video Username**: Enter the login username for the UC Engine. (The default username is "admin".)
    - **Teams Video Password**: Enter the login password for the UC Engine. (The default password is "sfb".)
4. Select **Save Changes**.

Configure the System

Use the conference device and your Microsoft Teams credentials to configure the UC Engine, as described in Configuration on page 296. For detailed information on deploying Microsoft Teams Rooms, refer to the Microsoft Teams Rooms documentation.

UC-M50-NC-T

Minimum Requirements

Ensure that the below requirements are met prior to setting up the system.

- A certified USB Camera (not included).
- A video display (not included) connected to the UC Engine. A second display is optional.
- A Microsoft Teams Rooms provisioned account (not included).

In The Box

Qty.	Description
	UC Bracket Assembly
1	UC Bracket Assembly with UC Engine and HDMI content ingest (UC-BRKT-200-S-T-ASSY, 6512689)
2	Anchor, Drywall, Plastic, 3/8 in. x 1/2 in. (9.5 mm x 12.7 mm) (2052565)
1	Key, Anchor (4529654)
2	Screw, 8-AB x 1-1/2 in. (38.1 mm), Pan Head, Combo (2052567)
4	Tie Wrap (2047935)
	Mercury Tabletop Conference Device
1	Tabletop Conference Device, Microsoft Teams video (6510716)
1	Cable, CAT5e, RJ-45 - RJ-45, 12 ft (3.7 m) (2033988)
1	Cable Retention Plate (2047908)
3	Tie Wrap (2047935)
	Additional Items
1	Cable, CAT6a, RJ-45 - RJ-45, 20 ft (6.1 m) (6507640)
1	Cable, CAT5e, RJ-45 - RJ-45, 7 ft (2.1 m) (6509924)
1	Cable, HDMI 2.1, 6 ft (1.8 m) (6512150)
1	Cable, HDMI, 20 ft (6.1 m) (6503567)
1	Cable, DisplayPort to HDMI, 6 ft (1.8 m) (6508282)
1	Cable, USB Extension, USB Type A Male-to-Female, 15 ft (4.6 m) (6508260)
1	Cable, USB 2.0, A - Micro-B, 6 ft (1.8 m) (6510947)
1	Power supply (6500187)

Mount Devices

Mount the UC Bracket Assembly

Mount the UC Bracket Assembly to VESA® compliant display devices, a wall, or other building structure. Anchors and screws are supplied for installation on walls with 3/8 in. (9.5 mm) to 3/4 in. (19 mm) thickness.

CAUTION: Preinstalled screws may protrude from the back of the UC Bracket Assembly. Exercise caution when handling the UC Bracket Assembly to avoid scratching or damaging surfaces.

NOTE: The integrated cable tie wraps are reusable. Avoid damaging the cable tie wraps.

Mount the Tabletop Conference Device

The tabletop conference device can be placed on any flat surface or secured on a table using the CCS-UCA-SMK tabletop swivel mount kit (sold separately).

Install the Cable Retention Plate

The included cable retention plate provides tie-down points for cables that connect to the Crestron® conference device.

Remove the adhesive backing from the cable retention plate and install the plate on the underside of the conference device as shown in the following diagram. Ensure the cable retention plate is firmly attached before securing cables.

CAUTION: When turning over the device, place the device on a soft surface to avoid damage.

NOTE: If a swivel mount kit (CCS-UCA-SMK) is to be used, use the cable retention bracket included with the swivel mount kit as described in the CCS-UCA-SMK DO Guide (Doc. 7882).

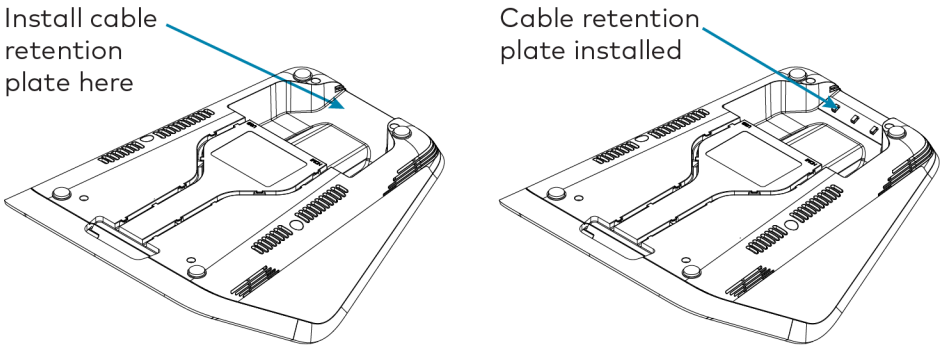

Identify the UC Bracket Assembly

The UC Bracket Assembly is available in two models. Identify the model included with your Crestron Flex system. Tap or click the corresponding image below to navigate to the appropriate connection instructions.

UC Bracket Assembly with HD-CONV-USB-200

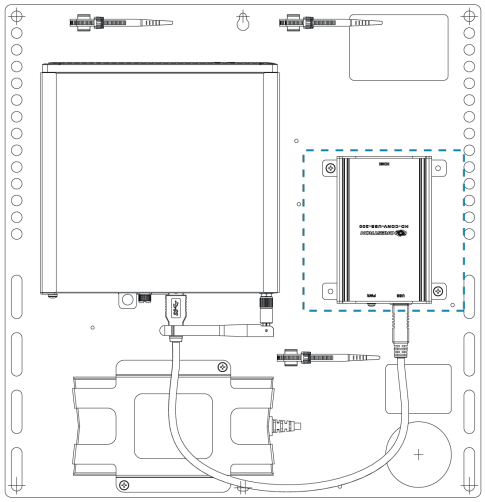

UC Bracket Assembly with HD-CONV-USB-300

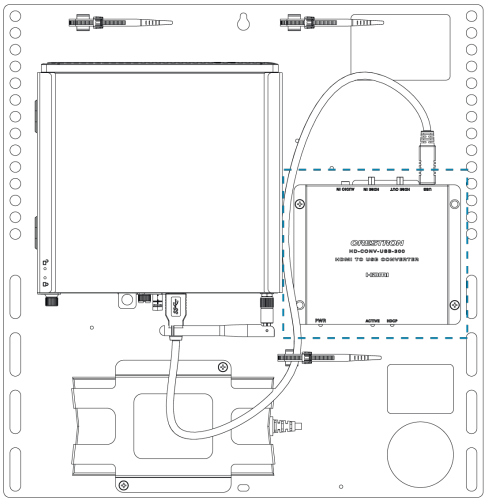

System Overview

For UC Bracket Assembly with HD-CONV-USB-200

When connections are complete, the system appears as shown below. Refer to Make Connections on page 239 for detailed connection instructions.

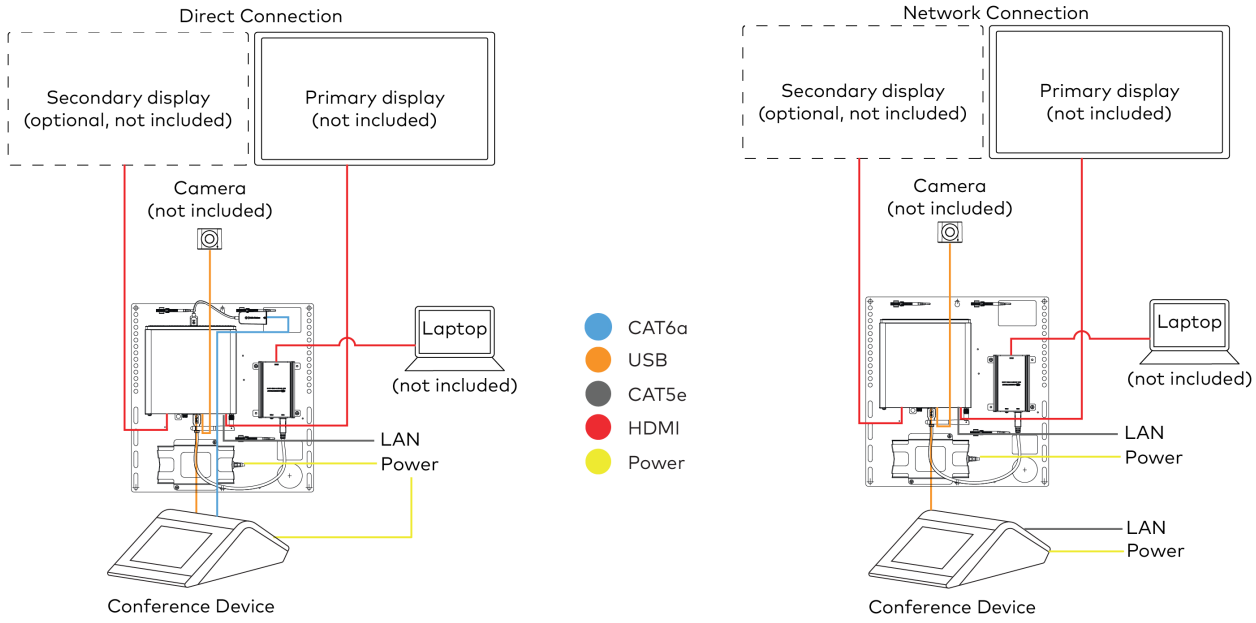

For UC Bracket Assembly with HD-CONV-USB-300

When connections are complete, the system appears as shown below. Refer to Make Connections on page 239 for detailed connection instructions.

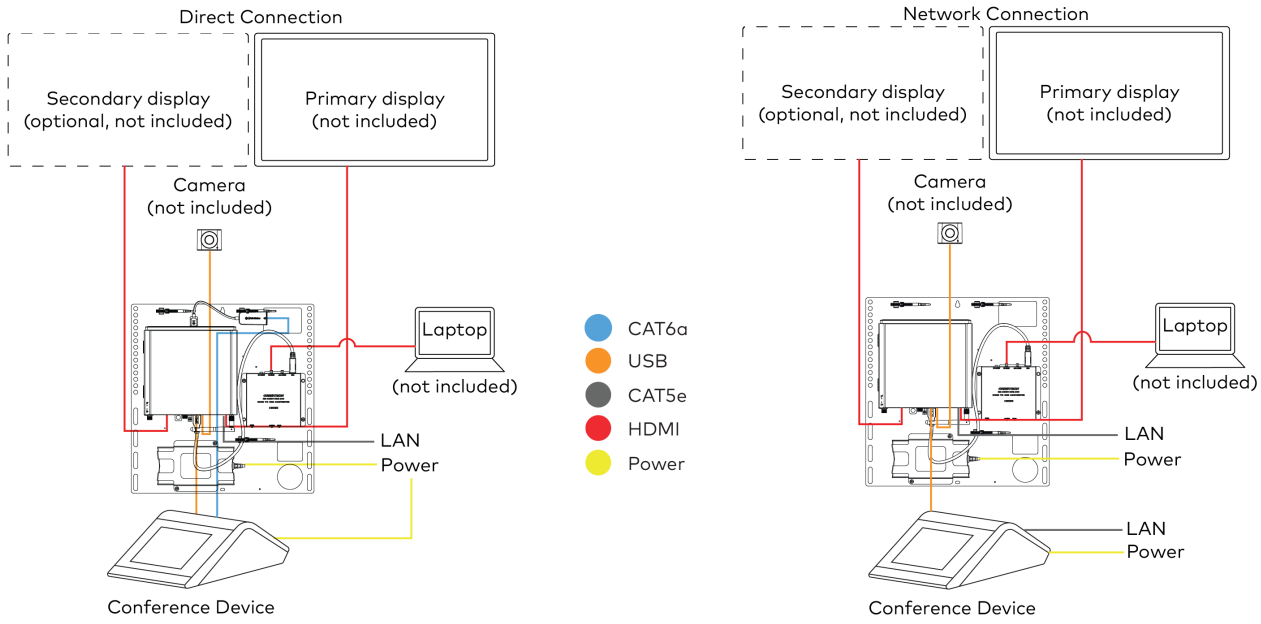

Make Connections

NOTE: For reference, the UC Bracket Assembly is shown with the HD-CONV-USB-200 in the following connection diagrams. Unless otherwise indicated in this guide, the connections remain the same for the UC Bracket Assembly with HD-CONV-USB-200 and HD-CONV-USB-300.

1. Make UC Engine connections as shown in the following illustrations. The conference device can communicate with the UC Engine over a direct connection or a network connection. Select one of the connection types as described below.
   - Make a direct connection for simple installation and setup. Only use the direct connect adapter to connect the conference device to the UC Engine. Do not use the direct connect adapter to connect the UC Engine to the network.

     Direct Connection

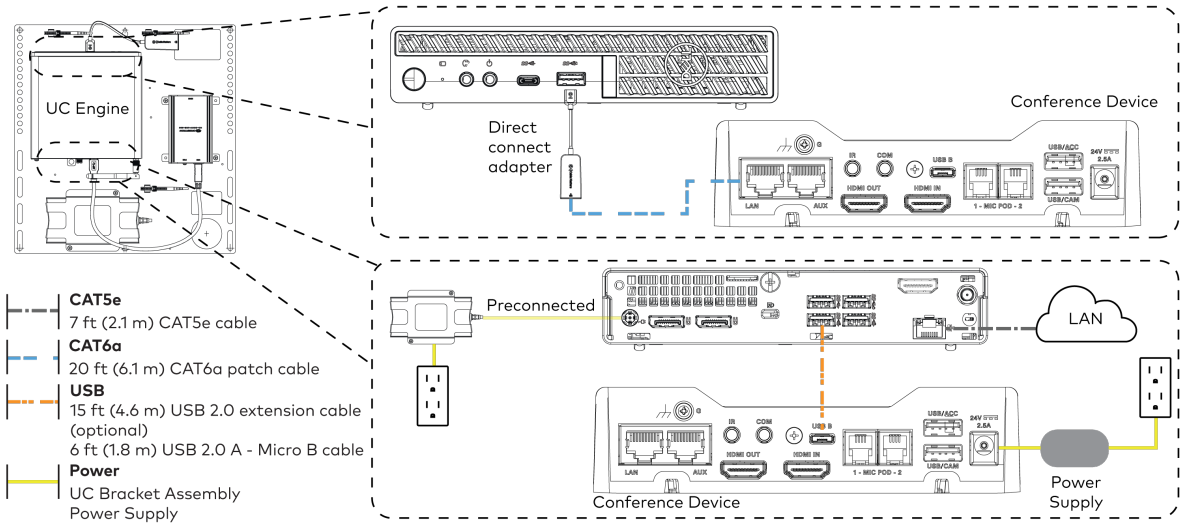

   - Make a network connection if the system is to be managed by the XiO Cloud® service.

     NOTE: When a network connection is used, disconnect the direct connect adapter from the UC Engine.

     Network Connection

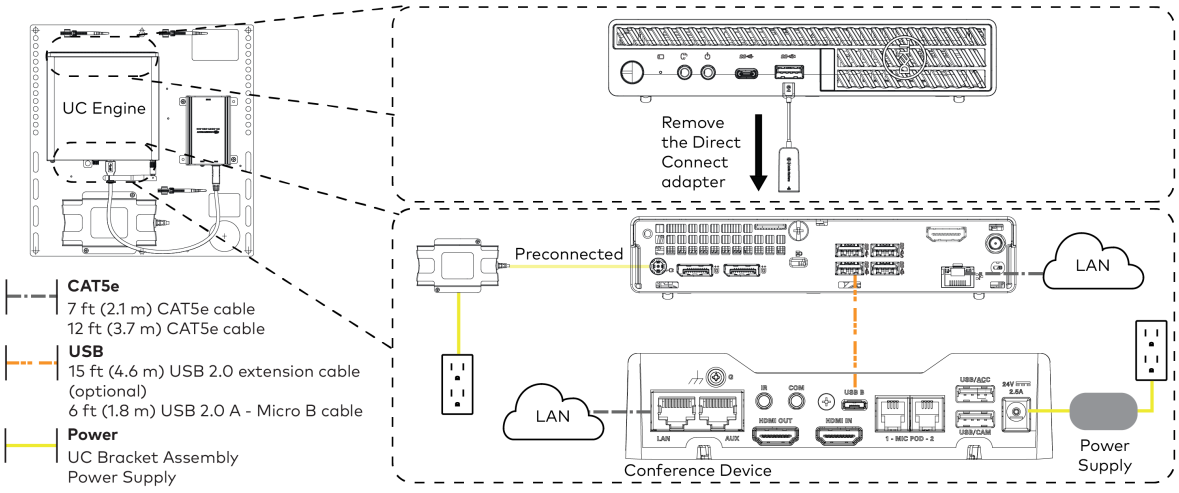

2. Connect displays to the UC Engine.

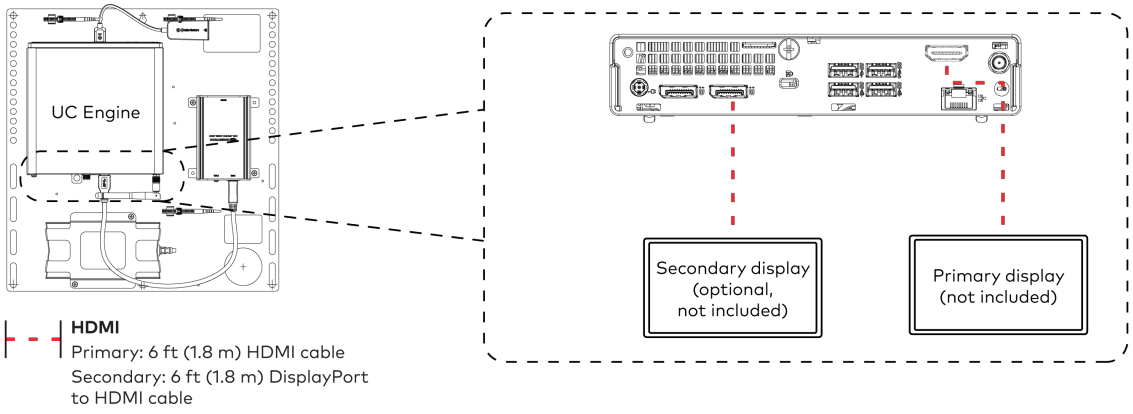

HDMI
Primary: 6 ft (1.8 m) HDMI cable
Secondary: 6 ft (1.8 m) DisplayPort to HDMI cable

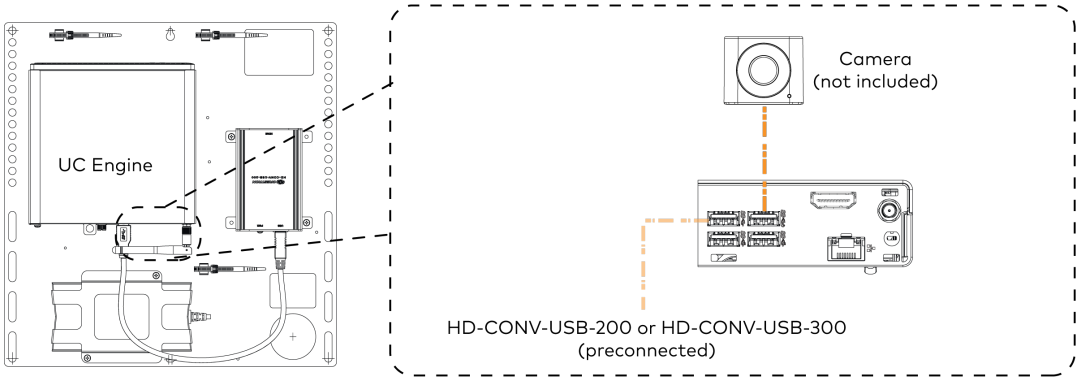

USB
Camera (not included)

3. Connect a laptop to the HD-CONV-USB-200 or HD-CONV-USB-300.

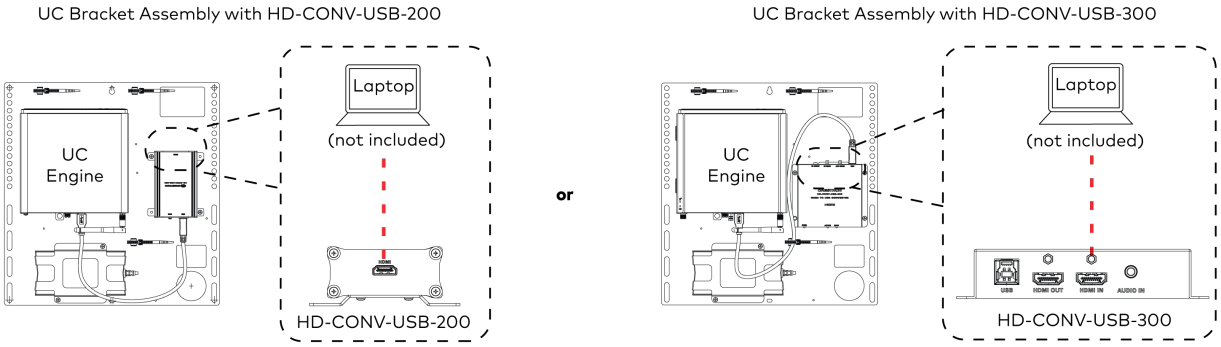

HDMI
20 ft (6.1 m) HDMI cable

4. Bundle the cables to the bracket assembly with the integrated cable tie wraps. The cable tie wraps are reusable.

Bundle Cables

Bundle the cables together and use a provided tie wrap to secure the bundle to one of the positions on the cable retention plate at the rear of the device. Avoid bundling power and data cables together.

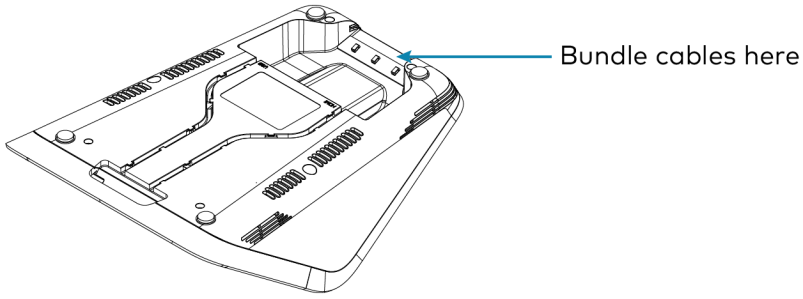

Apply Power

Press the power button on the bottom of the UC Engine and apply power to all of the other devices in the system. The conference device will display its IP address.

Configure the Conference Device

> **NOTE:** If a Direct Connection was made between the conference device and the UC Engine, skip to Configure the System on page 243.

1. On a computer, enter the IP address displayed on the conference device into a web browser.

   > **NOTES:**
   > - The device and computer must be on the same network switch and VLAN.
   > - A login with administrative rights for the device is required.

2. Log in to the device and navigate to **DEVICE** > **Applications**.
3. Enter the following information in the appropriate fields:
   - **Teams Video PC Address**: Enter the IP address or hostname of the UC Engine.

     > **NOTE:** The hostname is printed on a label affixed to the UC Engine.

   - **Teams Video PC Port**: By default, port number 49500 is used. If a different port number has been configured on the UC Engine, enter that port number instead.
   - **Teams Video Username**: Enter the login username for the UC Engine. (The default username is "admin".)
   - **Teams Video Password**: Enter the login password for the UC Engine. (The default password is "sfb".)
4. Select **Save Changes**.

Configure the System

Use the conference device and your Microsoft Teams credentials to configure the UC Engine, as described in Configuration on page 296. For detailed information on deploying Microsoft Teams Rooms, refer to the Microsoft Teams Rooms documentation.

UC-MX50-NC-T

Minimum Requirements

Ensure that the below requirements are met prior to setting up the system.

- A certified USB Camera (not included).
- A video display (not included) connected to the UC Engine. A second display is optional.
- A Microsoft Teams Rooms provisioned account (not included).

In The Box

Qty.	Description
	UC Bracket Assembly
1	UC Bracket Assembly with UC Engine and HDMI or AV over CAT5 content ingest (UC-BRKT-260-P-T-ASSY, 6512691)
1	Power pack (2045870)
2	Anchor, Drywall, Plastic, 3/8 in. x 1/2 in. (9.5 mm x 12.7 mm) (2052565)
1	Key, Anchor (4529654)
2	Screw, 8-AB x 1-1/2 in. (38.1 mm), Pan Head, Combo (2052567)
4	Tie Wrap (2047935)
	Mercury X Tabletop Conference Device
1	Tabletop Conference Device, Microsoft Teams video (6511747)
1	Cable, CAT5e, RJ-45 - RJ-45, 12 ft (3.7 m) (2033988)
1	Cable Retention Plate (2047908)
1	Power supply (2045873) with cord (2042043)
3	Tie Wrap (2047935)
	Additional Items
2	Cable, CAT6a, RJ-45 - RJ-45, 20 ft (6.1 m) (6507640)
1	Cable, CAT5e, RJ-45 - RJ-45, 7 ft (2.1 m) (6509924)
1	Cable, HDMI 2.1, 6 ft (1.8 m) (6512150)
1	Cable, DisplayPort to HDMI, 6 ft (1.8 m) (6508282)
1	Cable, USB 2.0, A - Micro-B, 6 ft (1.8 m) (6510947)
1	Cable, thin HDMI, 6 ft (1.8 m) (6510946)

Mount Devices

Mount the UC Bracket Assembly

Mount the UC Bracket Assembly to VESA® compliant display devices, a wall, or other building structure. Anchors and screws are supplied for installation on walls with 3/8 in. (9.5 mm) to 3/4 in. (19 mm) thickness.

CAUTION: Preinstalled screws may protrude from the back of the UC Bracket Assembly. Exercise caution when handling the UC Bracket Assembly to avoid scratching or damaging surfaces.

NOTE: The integrated cable tie wraps are reusable. Avoid damaging the cable tie wraps.

Mount the Tabletop Conference Device

The tabletop conference device can be placed on any flat surface or secured on a table using the CCS-UCA-SMK tabletop swivel mount kit (sold separately).

System Overview

When connections are complete, the system appears as shown below. Refer to Make Connections on page 246 for detailed connection instructions.

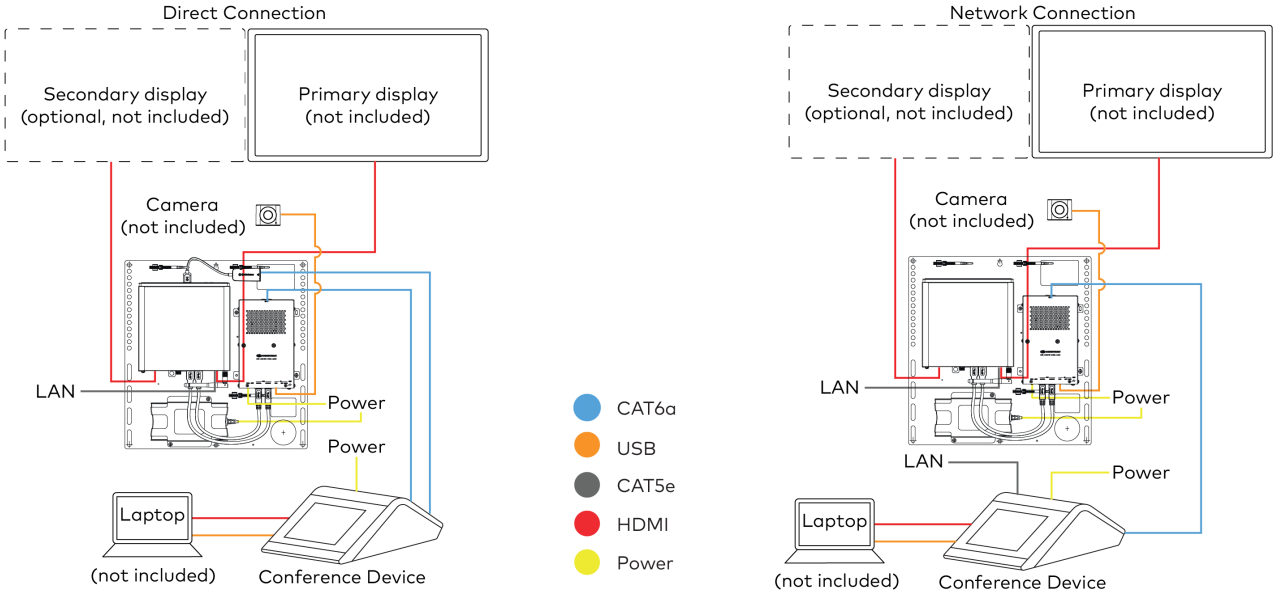

Make Connections

1. Make UC Engine connections as shown in the following illustrations. The conference device can communicate with the UC Engine over a direct connection or a network connection. Select one of the connection types as described below.
   - Make a direct connection for simple installation and setup. Only use the direct connect adapter to connect the conference device to the UC Engine. Do not use the direct connect adapter to connect the UC Engine to the network.

     Direct Connection

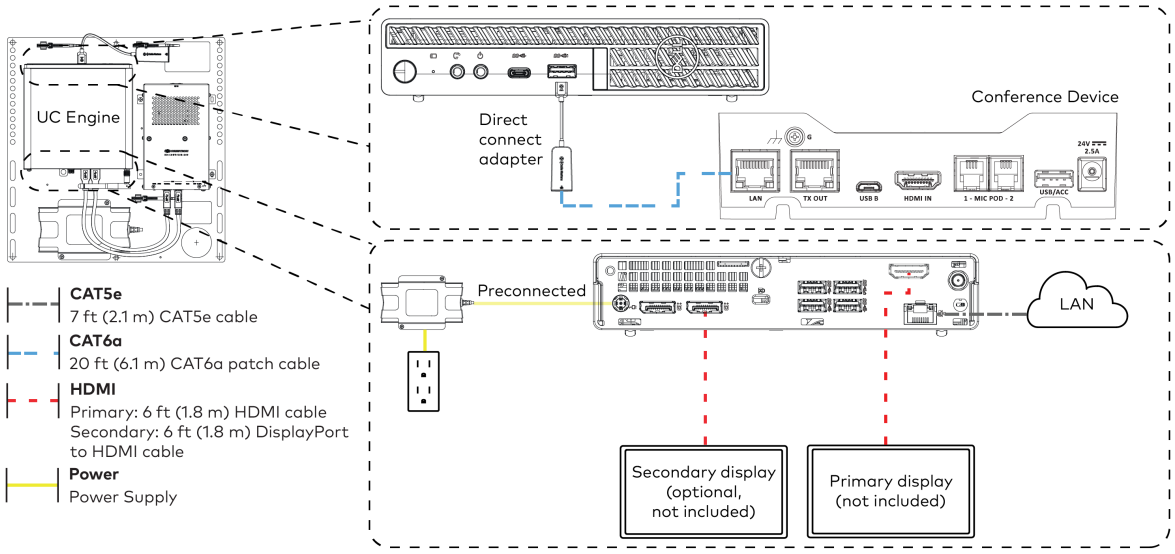

   - Make a network connection if the system is to be managed by the XiO Cloud® service.

     NOTE: When a network connection is used, disconnect the direct connect adapter from the UC Engine.

     Network Connection

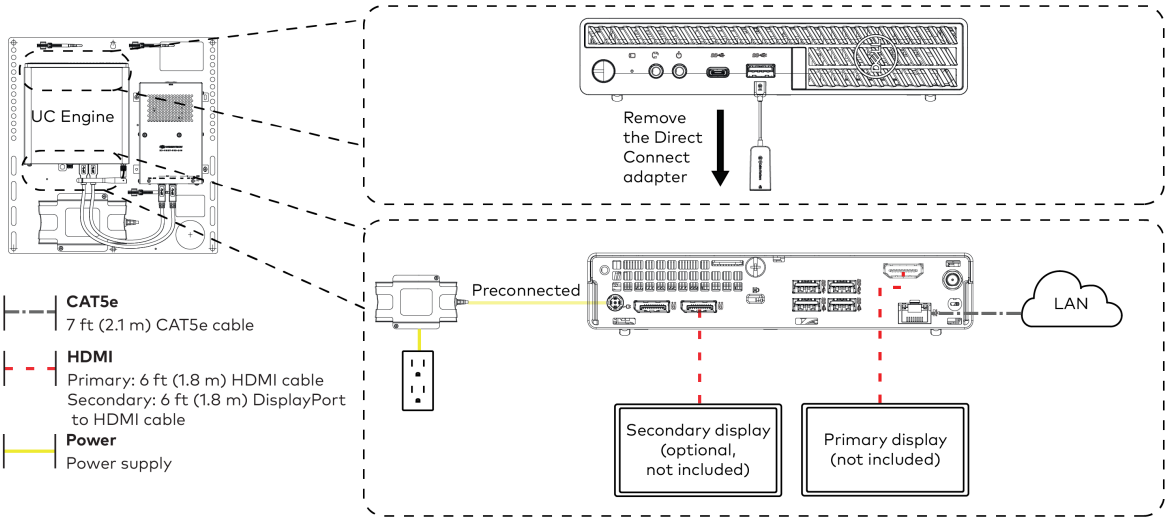

2. Make a network or direct connection on the bottom of the conference device as described in step 1. Make the remaining content ingest, laptop, and power connections. Connect the conference device's power supply to an AC power outlet.

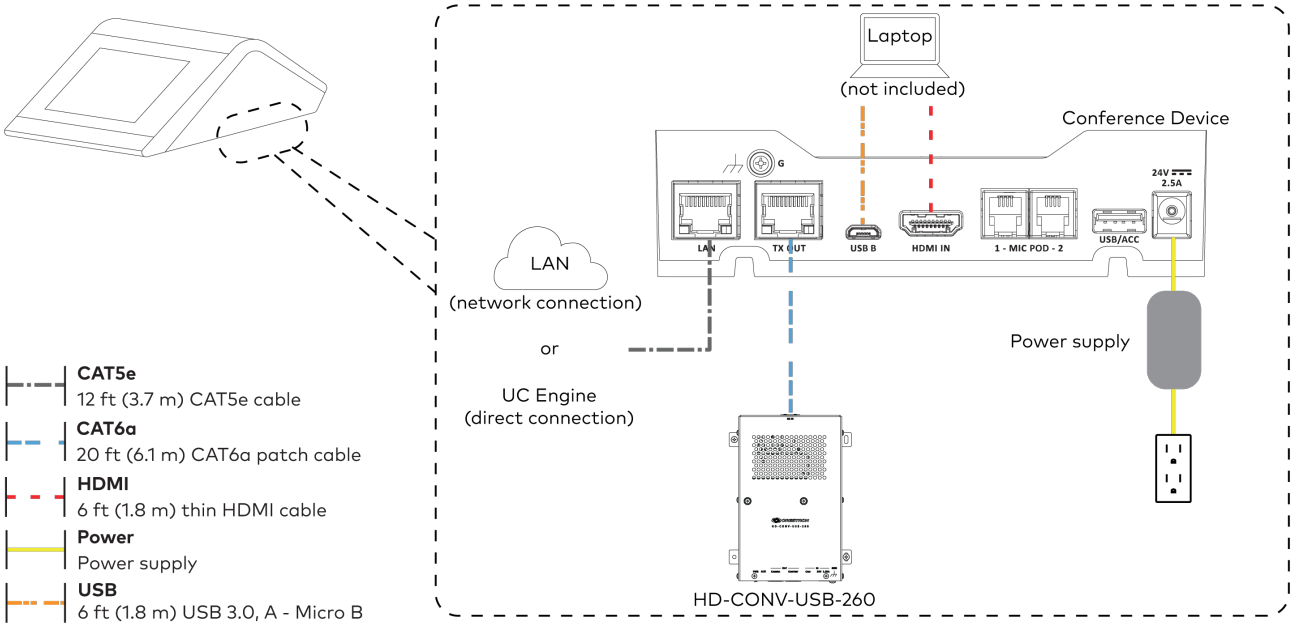

3. Connect the power supply and camera (not included) to the bottom of the content ingest device (HD-CONV-USB-260). Connect the power supply to an AC power outlet.

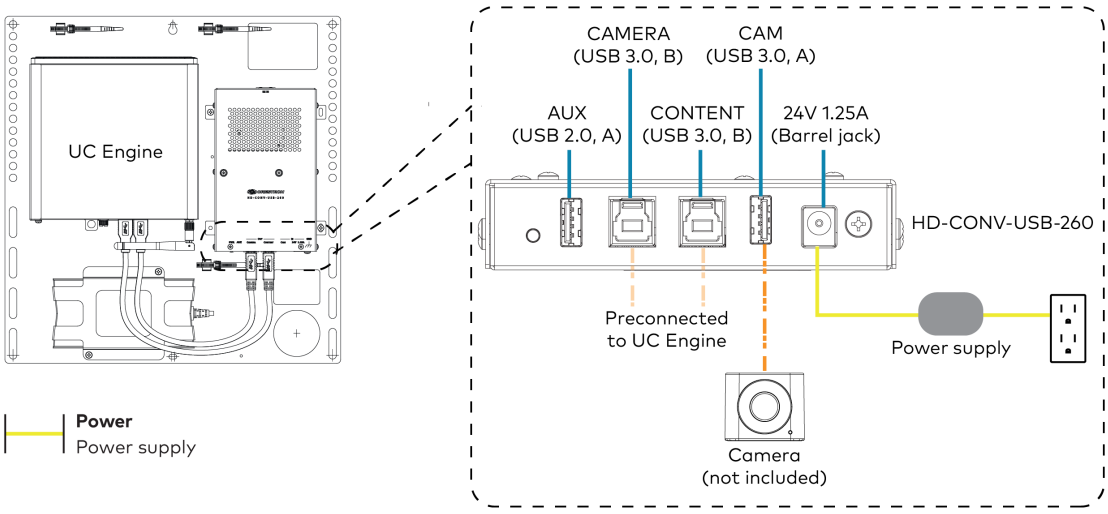

4. Bundle the cables to the bracket assembly with the integrated cable tie wraps. The cable tie wraps are reusable.

Apply Power

Press the power button on the bottom of the UC Engine and apply power to all of the other devices in the system.

Configure the Conference Device

1. On a computer, enter the IP address displayed on the conference device into a web browser to configure the device to operate in Teams Video mode.

   NOTES:
   - The device and computer must be on the same network switch and VLAN.
   - A login with administrative rights for the device is required.

2. Log in to the device and navigate to **DEVICE** > **Applications**.
3. Enter the following information in the appropriate fields:
   - **Teams Video PC Address**: Enter the IP address or hostname of the UC Engine.

     NOTE: The hostname is printed on a label affixed to the UC Engine.

   - **Teams Video PC Port**: By default, port number 49500 is used. If a different port number has been configured on the UC Engine, enter that port number instead.
   - **Teams Video Username**: Enter the login username for the UC Engine. (The default username is "admin".)
   - **Teams Video Password**: Enter the login password for the UC Engine. (The default password is "sfb".)

4. Select **Save Changes**.

Configure the System

Use the conference device and your Microsoft Teams credentials to configure the UC Engine, as described in Configuration on page 296. For detailed information on deploying Microsoft Teams Rooms, refer to the Microsoft Teams Rooms documentation.

UC-M70-T

Minimum Requirements

Ensure that the below requirements are met prior to setting up the system.

- A video display (not included) connected to the UC Engine. A second display is optional.
- A Microsoft Teams Rooms provisioned account (not included).

In The Box

Qty.	Description
	UC Bracket Assembly
1	UC Bracket Assembly with UC Engine and HDMI content ingest (UC-BRKT-200-S-T-ASSY, 6512689)
2	Anchor, Drywall, Plastic, 3/8 in. x 1/2 in. (9.5 mm x 12.7 mm) (2052565)
1	Key, Anchor (4529654)
2	Screw, 8-AB x 1-1/2 in. (38.1 mm), Pan Head, Combo (2052567)
4	Tie Wrap (2047935)
	Mercury Tabletop Conference Device
1	Tabletop Conference Device, Microsoft Teams video (6510716)
1	Cable, CAT5e, RJ-45 - RJ-45, 12 ft (3.7 m) (2033988)
1	Cable Retention Plate (2047908)
3	Tie Wrap (2047935)
	CCS-CAM-L1 AI Collaboration Camera
1	AI collaboration camera (6512296)
	Microphone Pod
1	Extension Microphone Pod (6508084)
	Additional Items
1	Cable, CAT6a, RJ-45 - RJ-45, 20 ft (6.1 m) (6507640)
1	Cable, CAT5e, RJ-45 - RJ-45, 7 ft (2.1 m) (6509924)
1	Cable, HDMI 2.1, 6 ft (1.8 m) (6512150)
1	Cable, HDMI, 20 ft (6.1 m) (6503567)
1	Cable, DisplayPort to HDMI, 6 ft (1.8 m) (6508282)
1	Cable, USB Extension, USB Type A Male-to-Female, 15 ft (4.6 m) (6508260)
1	Cable, USB 2.0, A - Micro-B, 6 ft (1.8 m) (6510947)
1	Power supply (6500187)

Mount Devices

Mount the UC Bracket Assembly

Mount the UC Bracket Assembly to VESA® compliant display devices, a wall, or other building structure. Anchors and screws are supplied for installation on walls with 3/8 in. (9.5 mm) to 3/4 in. (19 mm) thickness.

CAUTION: Preinstalled screws may protrude from the back of the UC Bracket Assembly. Exercise caution when handling the UC Bracket Assembly to avoid scratching or damaging surfaces.

NOTE: The integrated cable tie wraps are reusable. Avoid damaging the cable tie wraps.

Mount the Camera

Mount the included camera according to its documentation.

Mount the Tabletop Conference Device

The tabletop conference device can be placed on any flat surface or secured on a table using the CCS-UCA-SMK tabletop swivel mount kit (sold separately).

Install the Cable Retention Plate

The included cable retention plate provides tie-down points for cables that connect to the Crestron® conference device.

Remove the adhesive backing from the cable retention plate and install the plate on the underside of the conference device as shown in the following diagram. Ensure the cable retention plate is firmly attached before securing cables.

CAUTION: When turning over the device, place the device on a soft surface to avoid damage.

NOTE: If a swivel mount kit (CCS-UCA-SMK) is to be used, use the cable retention bracket included with the swivel mount kit as described in the CCS-UCA-SMK DO Guide (Doc. 7882).

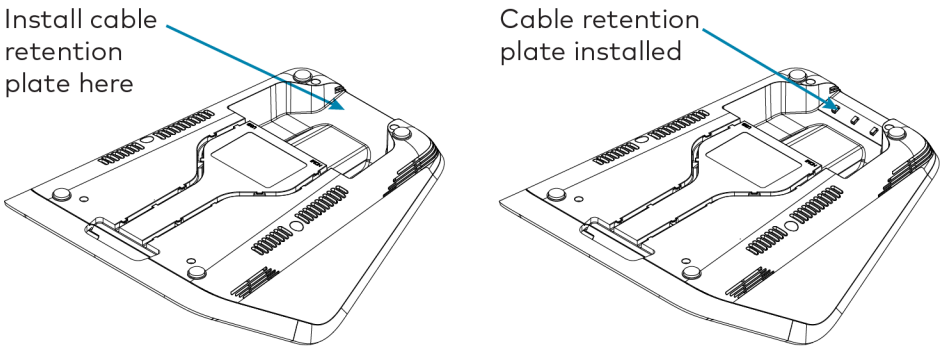

Identify the UC Bracket Assembly

The UC Bracket Assembly is available in two models. Identify the model included with your Crestron Flex system. Tap or click the corresponding image below to navigate to the appropriate connection instructions.

UC Bracket Assembly with HD-CONV-USB-200

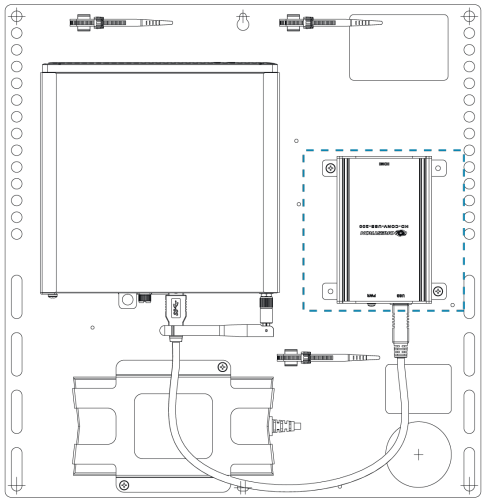

UC Bracket Assembly with HD-CONV-USB-300

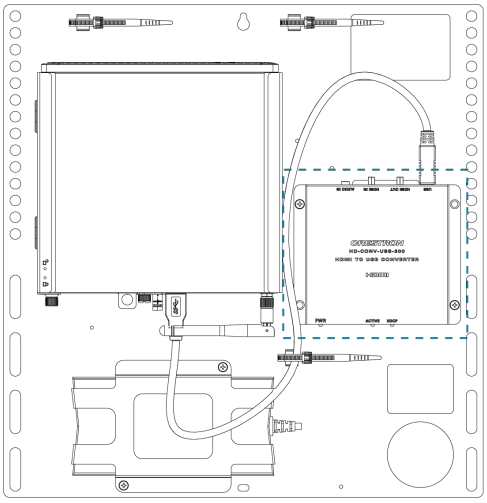

System Overview

For UC Bracket Assembly with HD-CONV-USB-200

When connections are complete, the system appears as shown below. Refer to Make Connections on page 254 for detailed connection instructions.

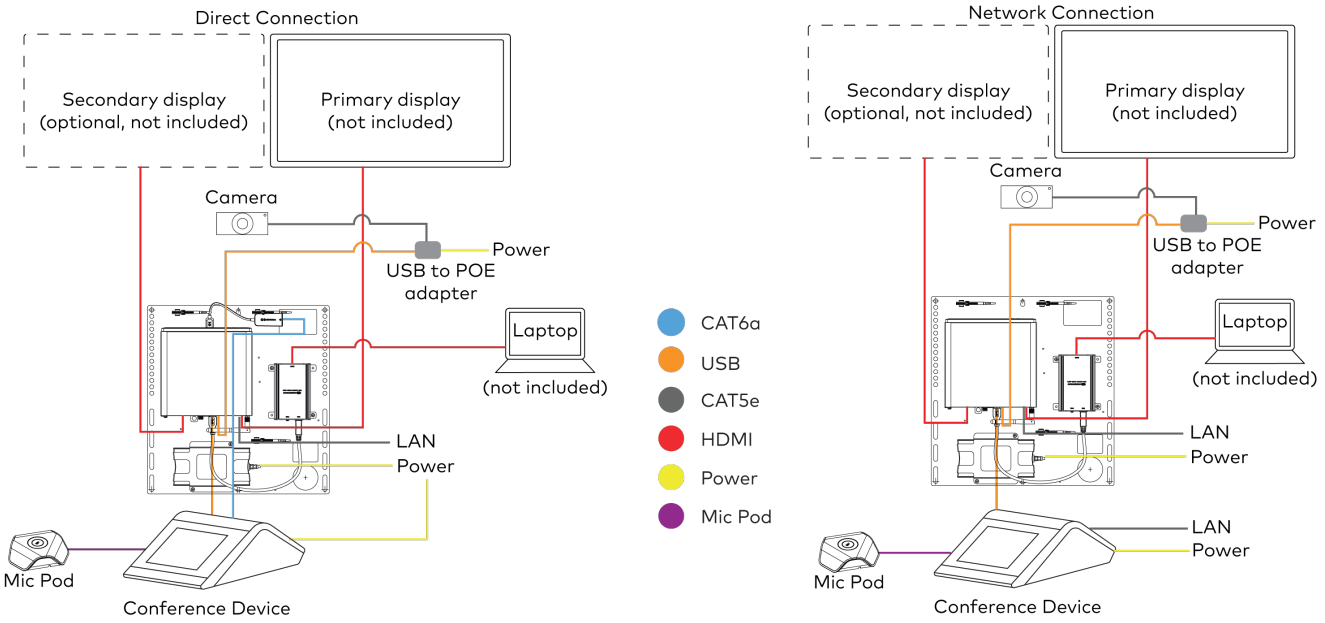

For UC Bracket Assembly with HD-CONV-USB-300

When connections are complete, the system appears as shown below. Refer to Make Connections on page 254 for detailed connection instructions.

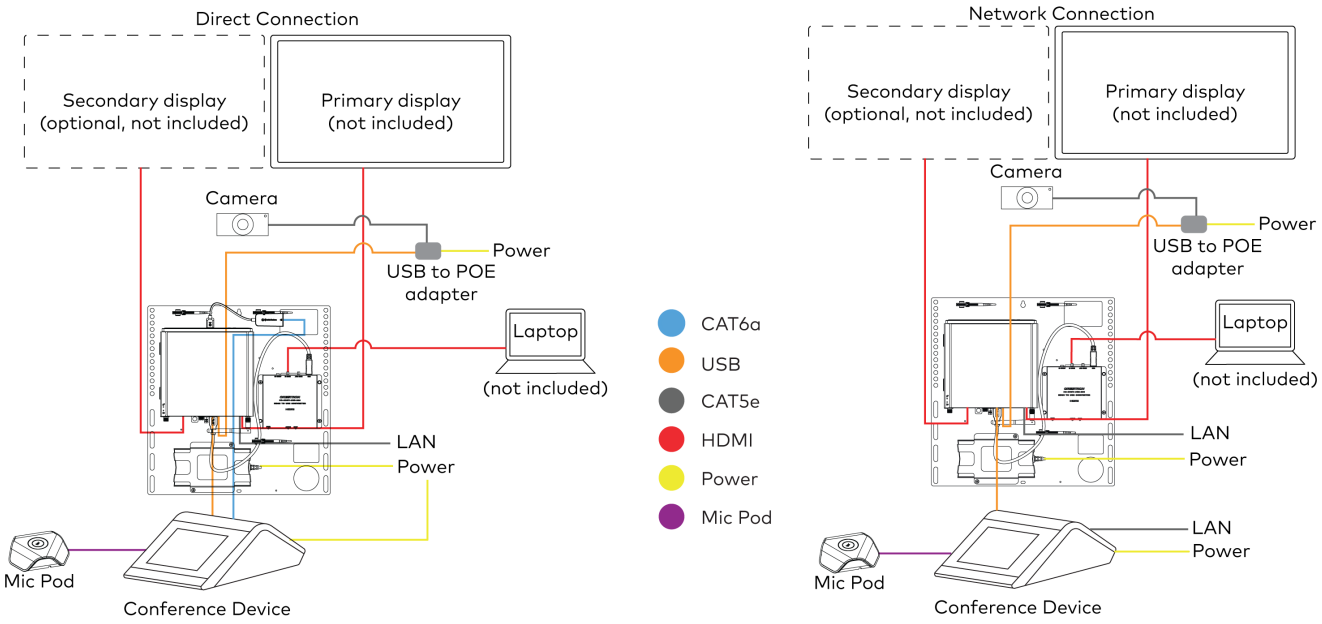

Make Connections

NOTE: For reference, the UC Bracket Assembly is shown with the HD-CONV-USB-200 in the following connection diagrams. Unless otherwise indicated in this guide, the connections remain the same for the UC Bracket Assembly with HD-CONV-USB-200 and HD-CONV-USB-300.

1. Make UC Engine connections as shown in the following illustrations. The conference device can communicate with the UC Engine over a direct connection or a network connection. Select one of the connection types as described below.
   - Make a direct connection for simple installation and setup. Only use the direct connect adapter to connect the conference device to the UC Engine. Do not use the direct connect adapter to connect the UC Engine to the network.

     Direct Connection

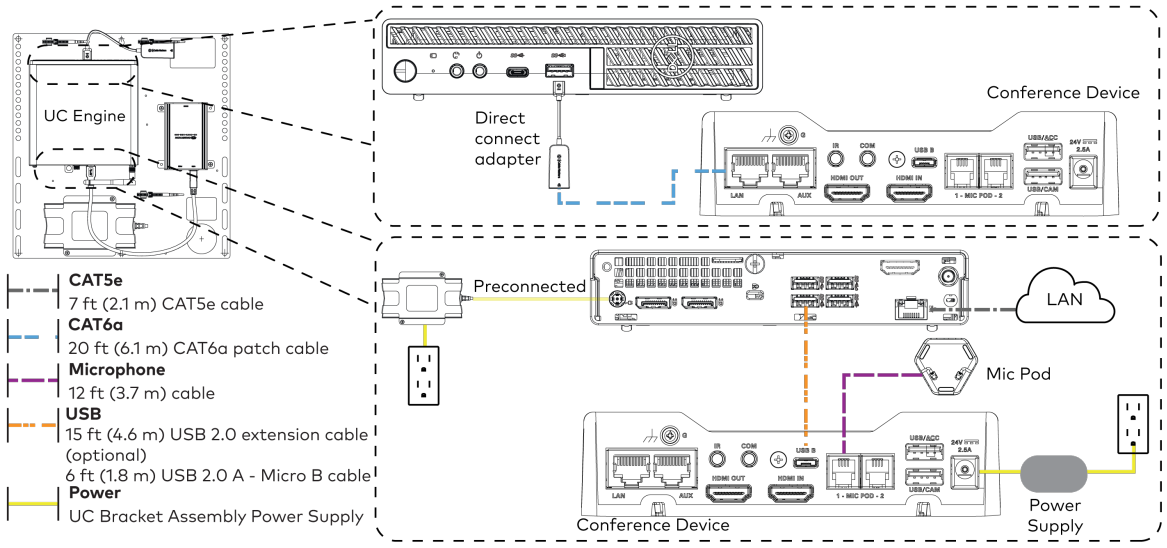

   - Make a network connection if the system is to be managed by the XiO Cloud® service.

     NOTE: When a network connection is used, disconnect the direct connect adapter from the UC Engine.

     Network Connection

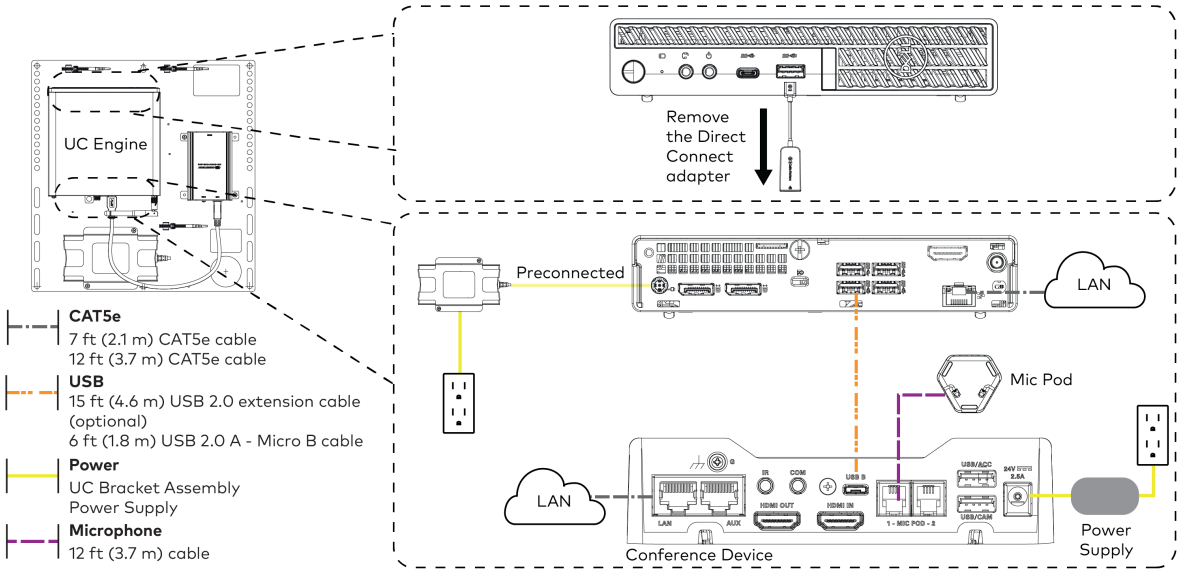

2. Connect displays to the UC Engine.

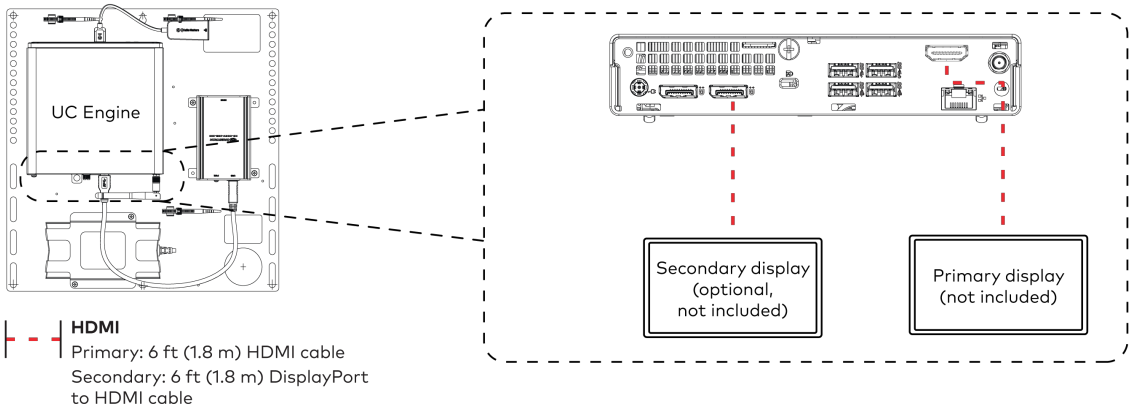

3. Connect the camera to the UC Engine as shown in the image below. Do not connect the camera to any of the other USB ports.

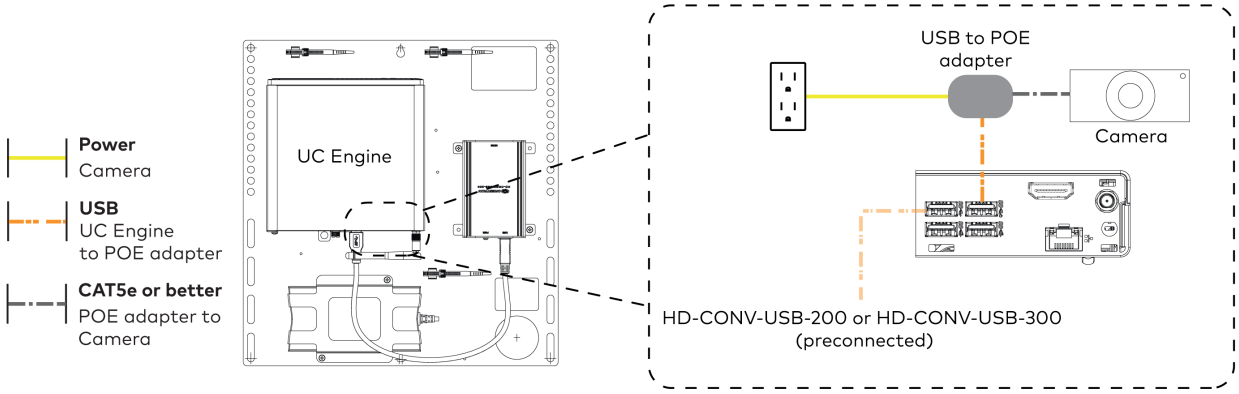

4. Connect a laptop to the HD-CONV-USB-200 or HD-CONV-USB-300.

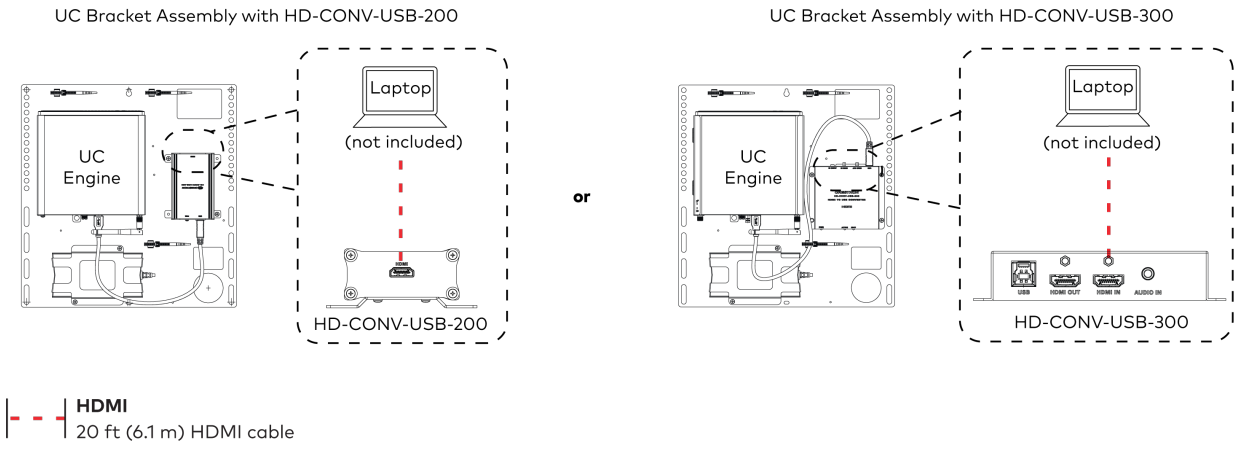

5. Bundle the cables to the bracket assembly with the integrated cable tie wraps. The cable tie wraps are reusable.

Bundle Cables

Bundle the cables together and use a provided tie wrap to secure the bundle to one of the positions on the cable retention plate at the rear of the device. Avoid bundling power and data cables together.

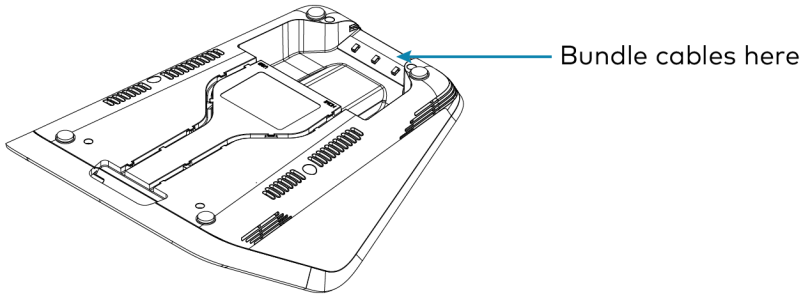

Apply Power

Press the power button on the bottom of the UC Engine and apply power to all of the other devices in the system. The conference device will display its IP address.

Configure the Conference Device

> **NOTE:** If a Direct Connection was made between the conference device and the UC Engine, skip to Configure the System on page 258.

1. On a computer, enter the IP address displayed on the conference device into a web browser.

   > **NOTES:**
   > - The device and computer must be on the same network switch and VLAN.
   > - A login with administrative rights for the device is required.

2. Log in to the device and navigate to **DEVICE** > **Applications**.
3. Enter the following information in the appropriate fields:
   - **Teams Video PC Address**: Enter the IP address or hostname of the UC Engine.

     > **NOTE:** The hostname is printed on a label affixed to the UC Engine.

   - **Teams Video PC Port**: By default, port number 49500 is used. If a different port number has been configured on the UC Engine, enter that port number instead.
   - **Teams Video Username**: Enter the login username for the UC Engine. (The default username is "admin".)
   - **Teams Video Password**: Enter the login password for the UC Engine. (The default password is "sfb".)
4. Select **Save Changes**.

Configure the System

Use the conference device and your Microsoft Teams credentials to configure the UC Engine, as described in Configuration on page 296. For detailed information on deploying Microsoft Teams Rooms, refer to the Microsoft Teams Rooms documentation.

UC-MX70-T

Minimum Requirements

Ensure that the below requirements are met prior to setting up the system.

- A video display (not included) connected to the UC Engine. A second display is optional.
- A Microsoft Teams Rooms provisioned account (not included).

In The Box

Qty.	Description
	UC Bracket Assembly
1	UC Bracket Assembly with UC Engine and HDMI or AV over CAT5 content ingest (UC-BRKT-260-P-T-ASSY, 6512691)
1	Power pack (2045870)
2	Anchor, Drywall, Plastic, 3/8 in. x 1/2 in. (9.5 mm x 12.7 mm) (2052565)
1	Key, Anchor (4529654)
2	Screw, 8-AB x 1-1/2 in. (38.1 mm), Pan Head, Combo (2052567)
4	Tie Wrap (2047935)
	Mercury X Tabletop Conference Device
1	Tabletop Conference Device, Microsoft Teams video (6511747)
1	Cable, CAT5e, RJ-45 - RJ-45, 12 ft (3.7 m) (2033988)
1	Cable Retention Plate (2047908)
1	Power supply (2045873) with cord (2042043)
3	Tie Wrap (2047935)
	CCS-CAM-L1 AI Collaboration Camera
1	AI collaboration camera (6512296)
	Microphone Pod
1	Extension Microphone Pod (6508084)
	Additional Items
2	Cable, CAT6a, RJ-45 - RJ-45, 20 ft (6.1 m) (6507640)
1	Cable, CAT5e, RJ-45 - RJ-45, 7 ft (2.1 m) (6509924)
1	Cable, HDMI 2.1, 6 ft (1.8 m) (6512150)
1	Cable, DisplayPort to HDMI, 6 ft (1.8 m) (6508282)
1	Cable, USB 2.0, A - Micro-B, 6 ft (1.8 m) (6510947)
1	Cable, thin HDMI, 6 ft (1.8 m) (6510946)

Mount Devices

Mount the UC Bracket Assembly

Mount the UC Bracket Assembly to VESA® compliant display devices, a wall, or other building structure. Anchors and screws are supplied for installation on walls with 3/8 in. (9.5 mm) to 3/4 in. (19 mm) thickness.

CAUTION: Preinstalled screws may protrude from the back of the UC Bracket Assembly. Exercise caution when handling the UC Bracket Assembly to avoid scratching or damaging surfaces.

NOTE: The integrated cable tie wraps are reusable. Avoid damaging the cable tie wraps.

Mount the Camera

Mount the included camera according to its documentation.

Mount the Tabletop Conference Device

The tabletop conference device can be placed on any flat surface or secured on a table using the CCS-UCA-SMK tabletop swivel mount kit (sold separately).

System Overview

When connections are complete, the system appears as shown below. Refer to Make Connections on page 262 for detailed connection instructions.

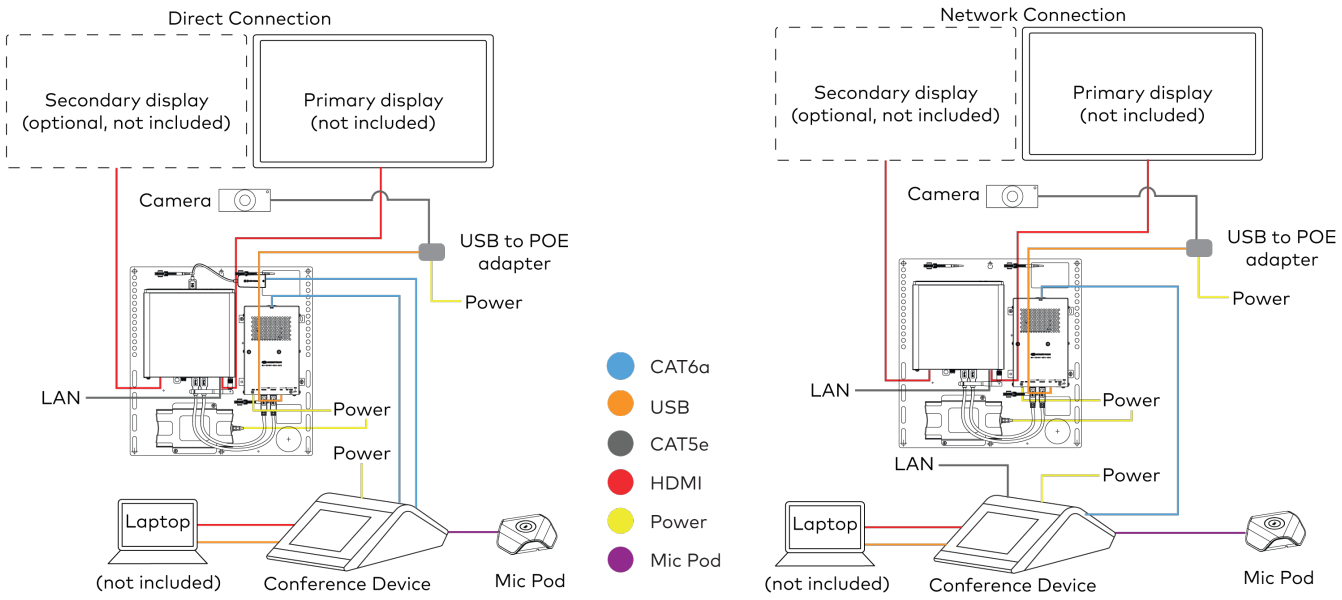

Make Connections

1. Make UC Engine connections as shown in the following illustrations. The conference device can communicate with the UC Engine over a direct connection or a network connection. Select one of the connection types as described below.
   - Make a direct connection for simple installation and setup. Only use the direct connect adapter to connect the conference device to the UC Engine. Do not use the direct connect adapter to connect the UC Engine to the network.

     Direct Connection

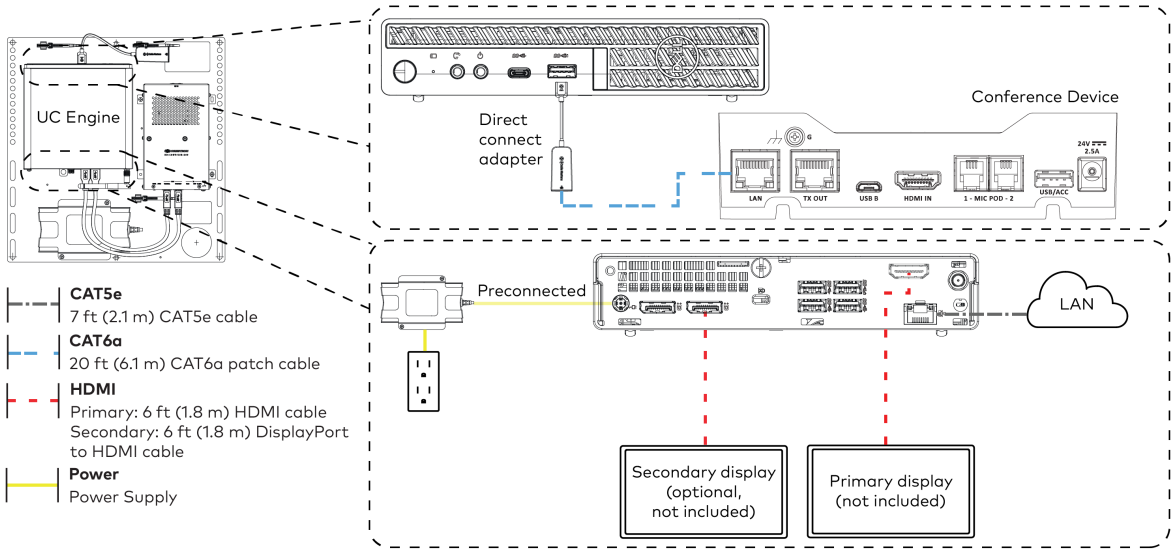

   - Make a network connection if the system is to be managed by the XiO Cloud® service.

     NOTE: When a network connection is used, disconnect the direct connect adapter from the UC Engine.

     Network Connection

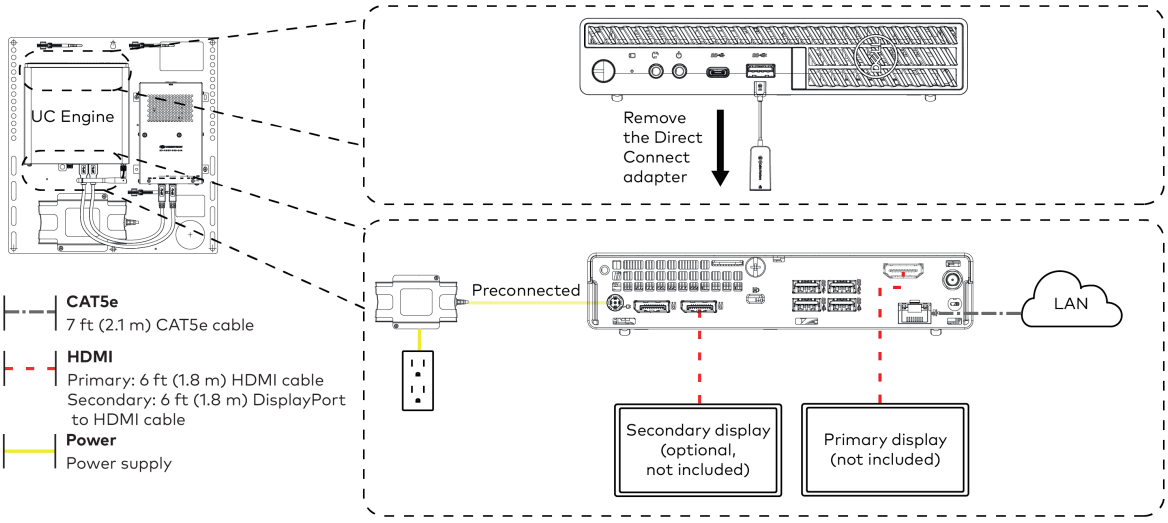

2. Make a network or direct connection on the bottom of the conference device as described in step 1. Make the remaining content ingest, laptop, mic pod, and power connections. Connect the conference device's power supply to an AC power outlet.

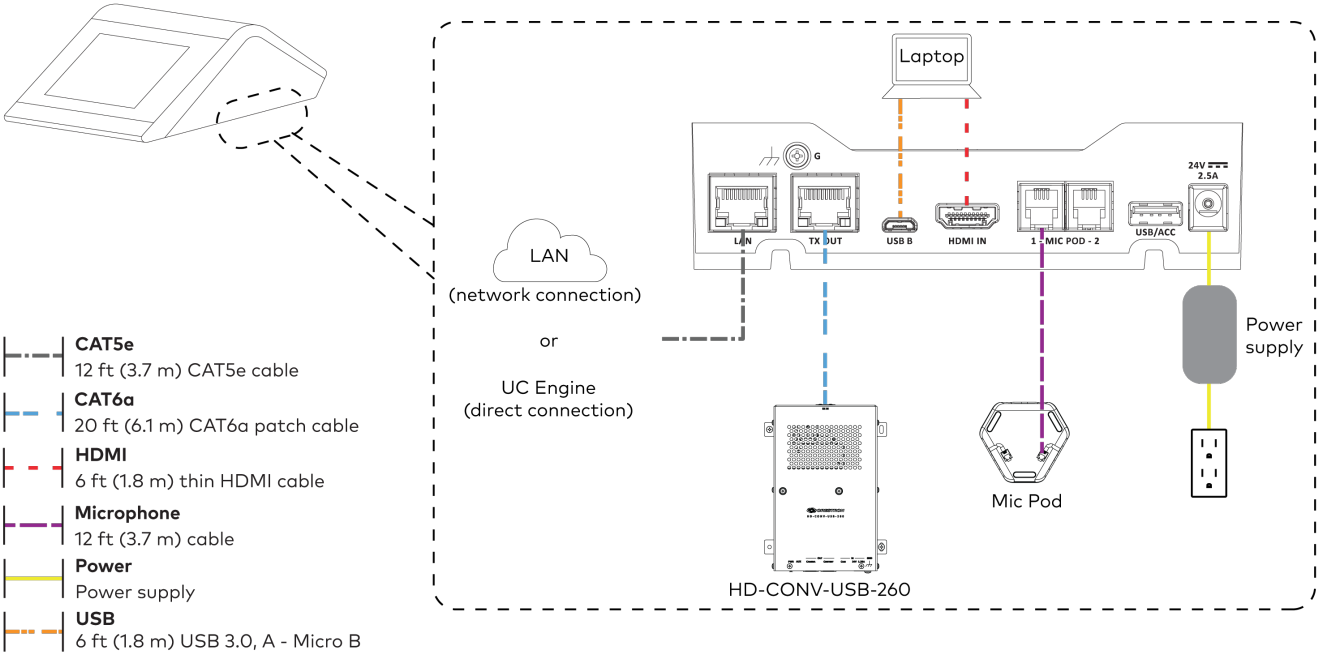

3. Connect the power supply and camera to the bottom of the content ingest device (HD-CONV-USB-260). Connect the power supplies to an AC power outlet.

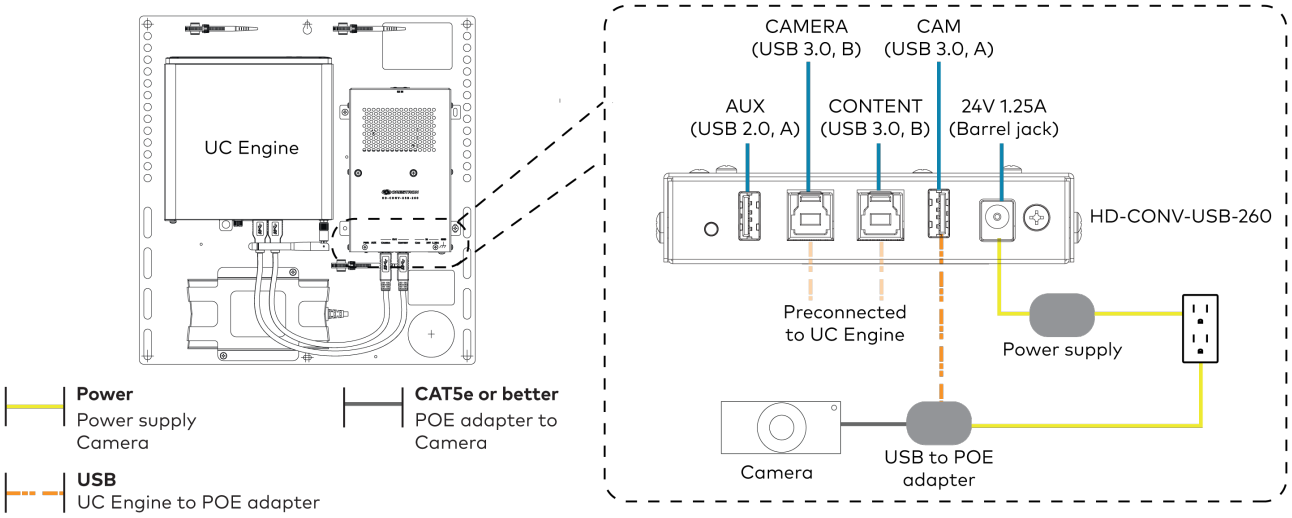

4. Bundle the cables to the bracket assembly with the integrated cable tie wraps. The cable tie wraps are reusable.

Apply Power

Press the power button on the bottom of the UC Engine and apply power to all of the other devices in the system.

Configure the Conference Device

1. On a computer, enter the IP address displayed on the conference device into a web browser to configure the device to operate in Teams Video mode.

   NOTES:
   - The device and computer must be on the same network switch and VLAN.
   - A login with administrative rights for the device is required.

2. Log in to the device and navigate to **DEVICE** > **Applications**.
3. Enter the following information in the appropriate fields:
   - **Teams Video PC Address**: Enter the IP address or hostname of the UC Engine.

     NOTE: The hostname is printed on a label affixed to the UC Engine.

   - **Teams Video PC Port**: By default, port number 49500 is used. If a different port number has been configured on the UC Engine, enter that port number instead.
   - **Teams Video Username**: Enter the login username for the UC Engine. (The default username is "admin".)
   - **Teams Video Password**: Enter the login password for the UC Engine. (The default password is "sfb".)

4. Select **Save Changes**.

Configure the System

Use the conference device and your Microsoft Teams credentials to configure the UC Engine, as described in Configuration on page 296. For detailed information on deploying Microsoft Teams Rooms, refer to the Microsoft Teams Rooms documentation.

UC-M70-NC-T

Minimum Requirements

Ensure that the below requirements are met prior to setting up the system.

- A certified USB Camera (not included).
- A video display (not included) connected to the UC Engine. A second display is optional.
- A Microsoft Teams Rooms provisioned account (not included).

In The Box

Qty.	Description
	UC Bracket Assembly
1	UC Bracket Assembly with UC Engine and HDMI content ingest (UC-BRKT-200-S-T-ASSY, 6512689)
2	Anchor, Drywall, Plastic, 3/8 in. x 1/2 in. (9.5 mm x 12.7 mm) (2052565)
1	Key, Anchor (4529654)
2	Screw, 8-AB x 1-1/2 in. (38.1 mm), Pan Head, Combo (2052567)
4	Tie Wrap (2047935)
	Mercury Tabletop Conference Device
1	Tabletop Conference Device, Microsoft Teams video (6510716)
1	Cable, CAT5e, RJ-45 - RJ-45, 12 ft (3.7 m) (2033988)
1	Cable Retention Plate (2047908)
3	Tie Wrap (2047935)
	Microphone Pod
1	Extension Microphone Pod (6508084)
	Additional Items
1	Cable, CAT6a, RJ-45 - RJ-45, 20 ft (6.1 m) (6507640)
1	Cable, CAT5e, RJ-45 - RJ-45, 7 ft (2.1 m) (6509924)
1	Cable, HDMI 2.1, 6 ft (1.8 m) (6512150)
1	Cable, HDMI, 20 ft (6.1 m) (6503567)
1	Cable, DisplayPort to HDMI, 6 ft (1.8 m) (6508282)
1	Cable, USB Extension, USB Type A Male-to-Female, 15 ft (4.6 m) (6508260)
1	Cable, USB 2.0, A - Micro-B, 6 ft (1.8 m) (6510947)
1	Power supply (6500187)

Mount Devices

Mount the UC Bracket Assembly

Mount the UC Bracket Assembly to VESA® compliant display devices, a wall, or other building structure. Anchors and screws are supplied for installation on walls with 3/8 in. (9.5 mm) to 3/4 in. (19 mm) thickness.

CAUTION: Preinstalled screws may protrude from the back of the UC Bracket Assembly. Exercise caution when handling the UC Bracket Assembly to avoid scratching or damaging surfaces.

NOTE: The integrated cable tie wraps are reusable. Avoid damaging the cable tie wraps.

Mount the Tabletop Conference Device

The tabletop conference device can be placed on any flat surface or secured on a table using the CCS-UCA-SMK tabletop swivel mount kit (sold separately).

Install the Cable Retention Plate

The included cable retention plate provides tie-down points for cables that connect to the Crestron® conference device.

Remove the adhesive backing from the cable retention plate and install the plate on the underside of the conference device as shown in the following diagram. Ensure the cable retention plate is firmly attached before securing cables.

CAUTION: When turning over the device, place the device on a soft surface to avoid damage.

NOTE: If a swivel mount kit (CCS-UCA-SMK) is to be used, use the cable retention bracket included with the swivel mount kit as described in the CCS-UCA-SMK DO Guide (Doc. 7882).

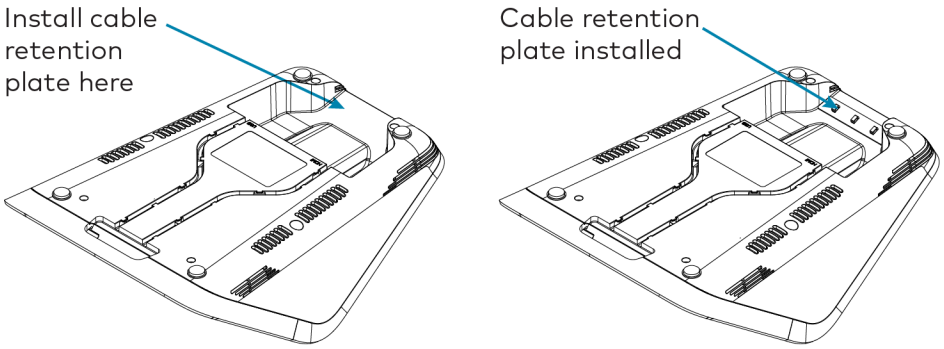

Identify the UC Bracket Assembly

The UC Bracket Assembly is available in two models. Identify the model included with your Crestron Flex system. Tap or click the corresponding image below to navigate to the appropriate connection instructions.

UC Bracket Assembly with HD-CONV-USB-200

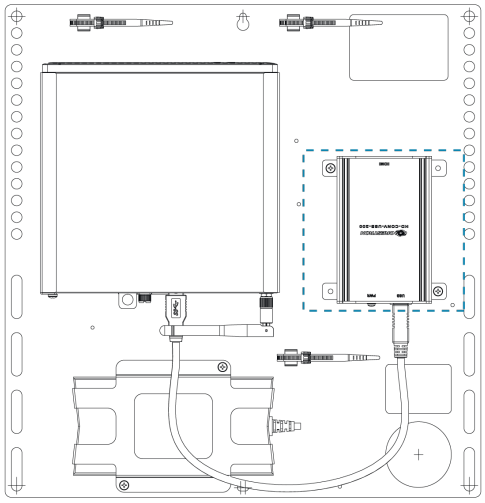

UC Bracket Assembly with HD-CONV-USB-300

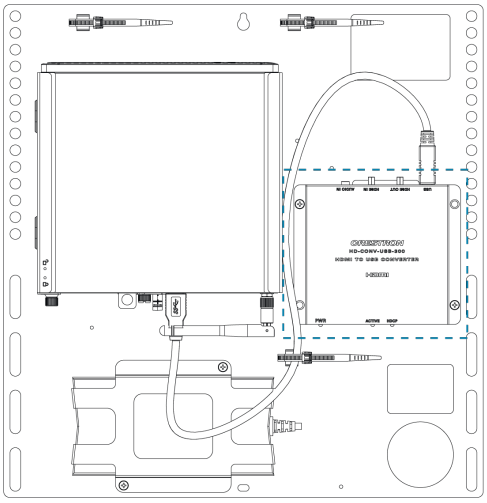

System Overview

For UC Bracket Assembly with HD-CONV-USB-200

When connections are complete, the system appears as shown below. Refer to Make Connections on page 269 for detailed connection instructions.

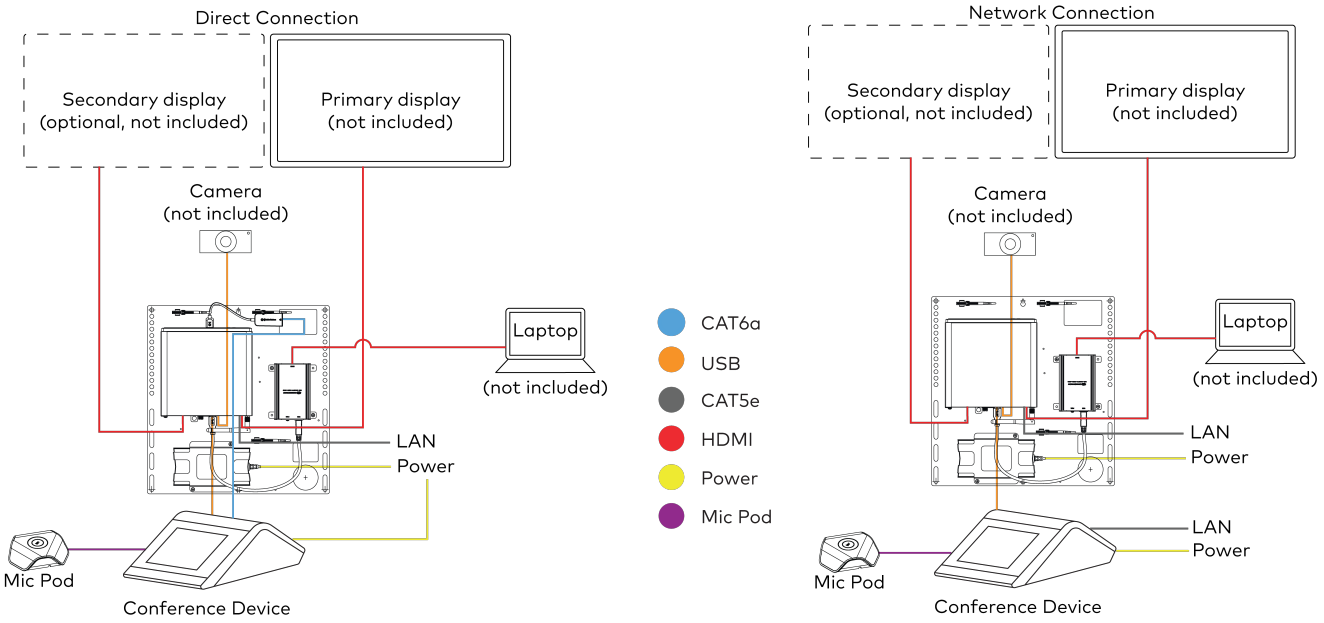

For UC Bracket Assembly with HD-CONV-USB-300

When connections are complete, the system appears as shown below. Refer to Make Connections on page 269 for detailed connection instructions.

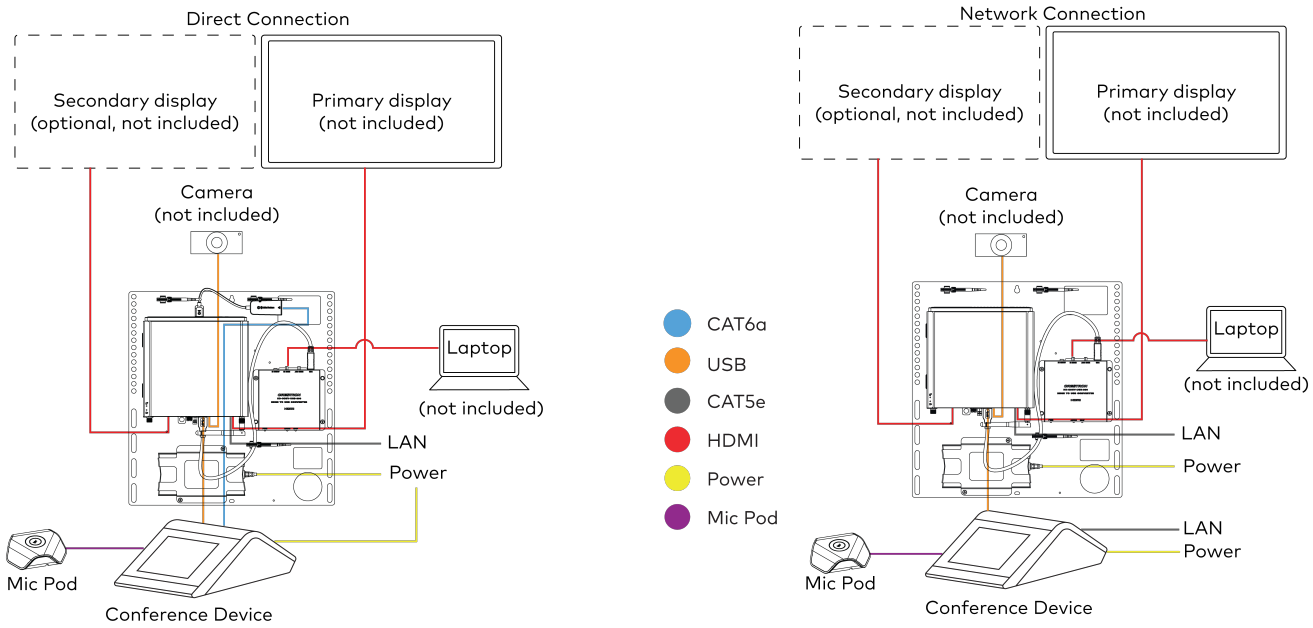

Make Connections

NOTE: For reference, the UC Bracket Assembly is shown with the HD-CONV-USB-200 in the following connection diagrams. Unless otherwise indicated in this guide, the connections remain the same for the UC Bracket Assembly with HD-CONV-USB-200 and HD-CONV-USB-300.

1. Make UC Engine connections as shown in the following illustrations. The conference device can communicate with the UC Engine over a direct connection or a network connection. Select one of the connection types as described below.
   - Make a direct connection for simple installation and setup. Only use the direct connect adapter to connect the conference device to the UC Engine. Do not use the direct connect adapter to connect the UC Engine to the network.

     Direct Connection

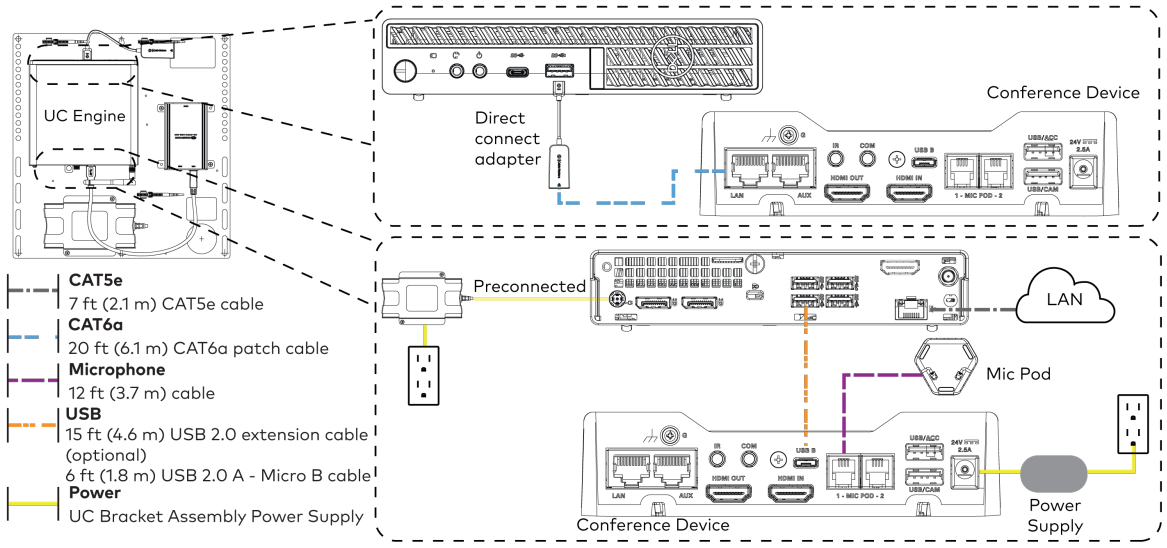

   - Make a network connection if the system is to be managed by the XiO Cloud® service.

     NOTE: When a network connection is used, disconnect the direct connect adapter from the UC Engine.

     Network Connection

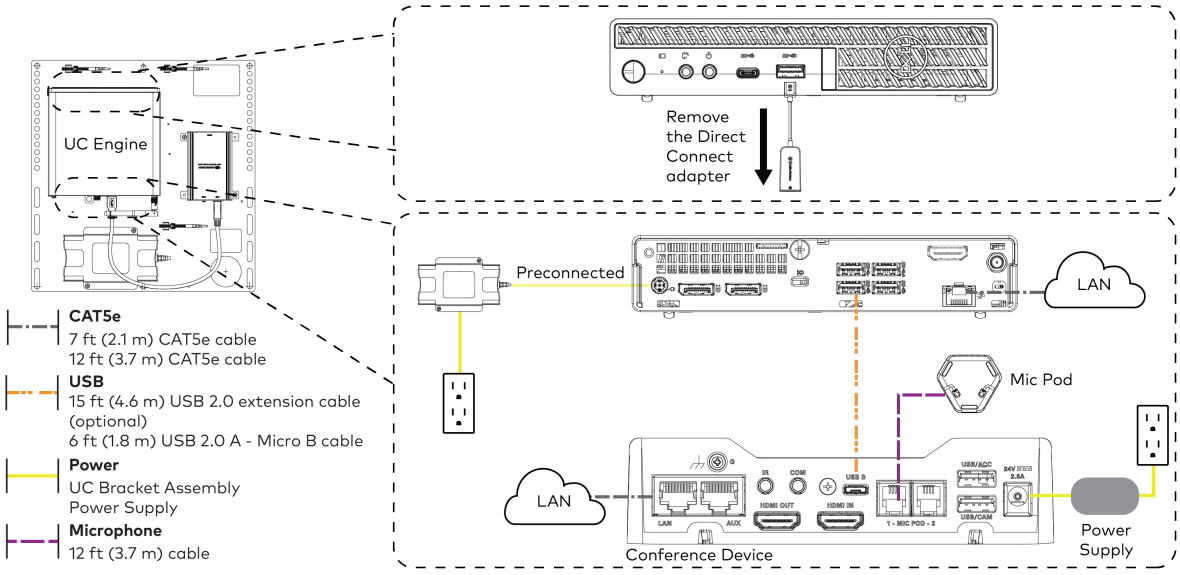

2. Connect displays to the UC Engine.

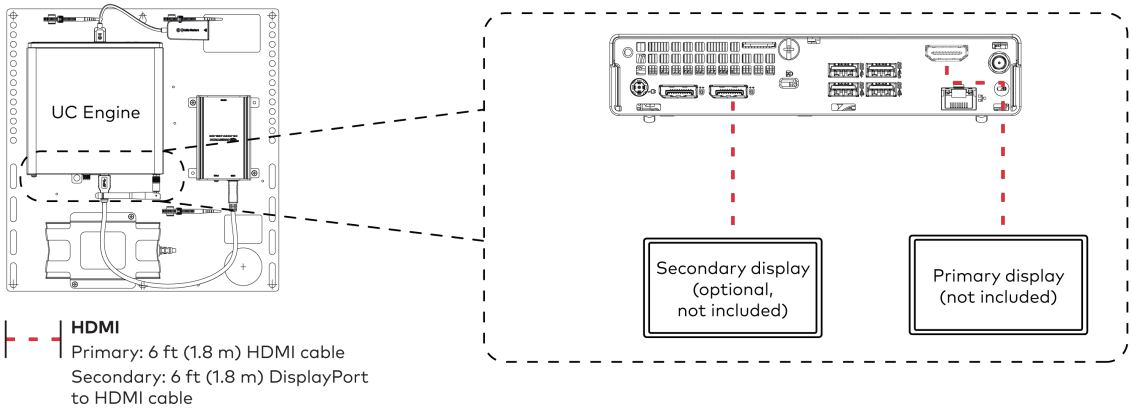

HDMI
Primary: 6 ft (1.8 m) HDMI cable
Secondary: 6 ft (1.8 m) DisplayPort to HDMI cable

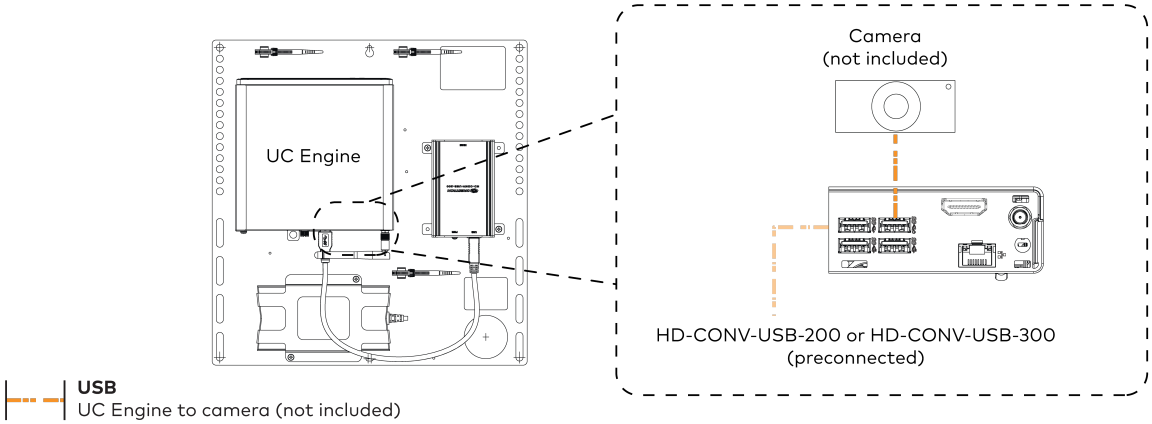

USB
UC Engine to camera (not included)

3. Connect a laptop to the HD-CONV-USB-200 or HD-CONV-USB-300.

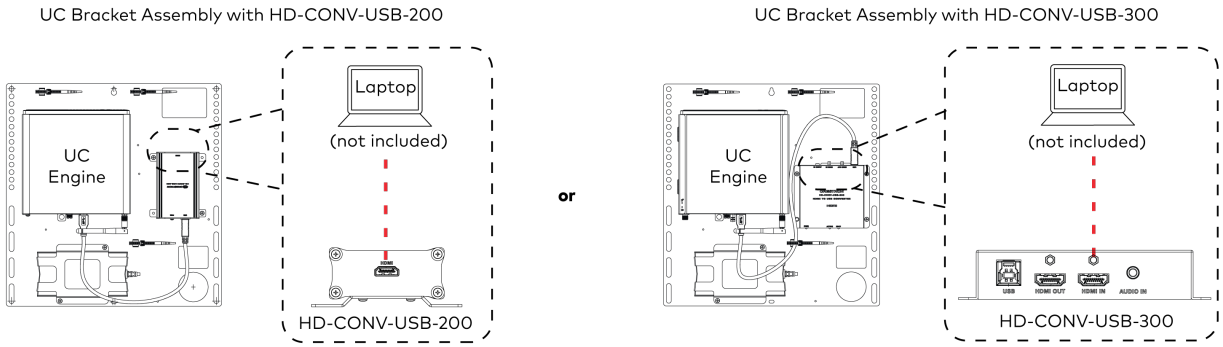

HDMI
20 ft (6.1 m) HDMI cable

4. Bundle the cables to the bracket assembly with the integrated cable tie wraps. The cable tie wraps are reusable.

Bundle Cables

Bundle the cables together and use a provided tie wrap to secure the bundle to one of the positions on the cable retention plate at the rear of the device. Avoid bundling power and data cables together.

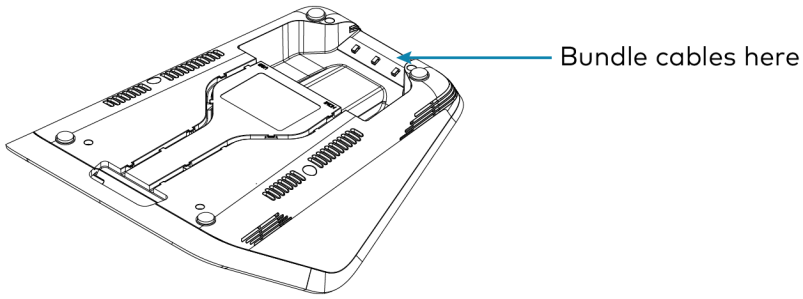

Apply Power

Press the power button on the bottom of the UC Engine and apply power to all of the other devices in the system. The conference device will display its IP address.

Configure the Conference Device

> **NOTE:** If a Direct Connection was made between the conference device and the UC Engine, skip to Configure the System on page 272.

1. On a computer, enter the IP address displayed on the conference device into a web browser.

   > **NOTES:**
   > - The device and computer must be on the same network switch and VLAN.
   > - A login with administrative rights for the device is required.

2. Log in to the device and navigate to **DEVICE** > **Applications**.
3. Enter the following information in the appropriate fields:
   - **Teams Video PC Address**: Enter the IP address or hostname of the UC Engine.

     > **NOTE:** The hostname is printed on a label affixed to the UC Engine.

   - **Teams Video PC Port**: By default, port number 49500 is used. If a different port number has been configured on the UC Engine, enter that port number instead.
   - **Teams Video Username**: Enter the login username for the UC Engine. (The default username is "admin".)
   - **Teams Video Password**: Enter the login password for the UC Engine. (The default password is "sfb".)
4. Select **Save Changes**.

Configure the System

Use the conference device and your Microsoft Teams credentials to configure the UC Engine, as described in Configuration on page 296. For detailed information on deploying Microsoft Teams Rooms, refer to the Microsoft Teams Rooms documentation.

UC-MX70-NC-T

Minimum Requirements

Ensure that the below requirements are met prior to setting up the system.

- A certified USB Camera (not included).
- A video display (not included) connected to the UC Engine. A second display is optional.
- A Microsoft Teams Rooms provisioned account (not included).

In The Box

Qty.	Description
	UC Bracket Assembly
1	UC Bracket Assembly with UC Engine and HDMI or AV over CAT5 content ingest (UC-BRKT-260-P-T-ASSY, 6512691)
1	Power pack (2045870)
2	Anchor, Drywall, Plastic, 3/8 in. x 1/2 in. (9.5 mm x 12.7 mm) (2052565)
1	Key, Anchor (4529654)
2	Screw, 8-AB x 1-1/2 in. (38.1 mm), Pan Head, Combo (2052567)
4	Tie Wrap (2047935)
	Mercury X Tabletop Conference Device
1	Tabletop Conference Device, Microsoft Teams video (6511747)
1	Cable, CAT5e, RJ-45 - RJ-45, 12 ft (3.7 m) (2033988)
1	Cable Retention Plate (2047908)
1	Power supply (2045873) with cord (2042043)
3	Tie Wrap (2047935)
	Microphone Pod
1	Extension Microphone Pod (6508084)
	Additional Items
2	Cable, CAT6a, RJ-45 - RJ-45, 20 ft (6.1 m) (6507640)
1	Cable, CAT5e, RJ-45 - RJ-45, 7 ft (2.1 m) (6509924)
1	Cable, HDMI 2.1, 6 ft (1.8 m) (6512150)
1	Cable, DisplayPort to HDMI, 6 ft (1.8 m) (6508282)
1	Cable, USB 2.0, A - Micro-B, 6 ft (1.8 m) (6510947)
1	Cable, thin HDMI, 6 ft (1.8 m) (6510946)

Mount Devices

Mount the UC Bracket Assembly

Mount the UC Bracket Assembly to VESA® compliant display devices, a wall, or other building structure. Anchors and screws are supplied for installation on walls with 3/8 in. (9.5 mm) to 3/4 in. (19 mm) thickness.

CAUTION: Preinstalled screws may protrude from the back of the UC Bracket Assembly. Exercise caution when handling the UC Bracket Assembly to avoid scratching or damaging surfaces.

NOTE: The integrated cable tie wraps are reusable. Avoid damaging the cable tie wraps.

Mount the Tabletop Conference Device

The tabletop conference device can be placed on any flat surface or secured on a table using the CCS-UCA-SMK tabletop swivel mount kit (sold separately).

System Overview

When connections are complete, the system appears as shown below. Refer to Make Connections on page 275 for detailed connection instructions.

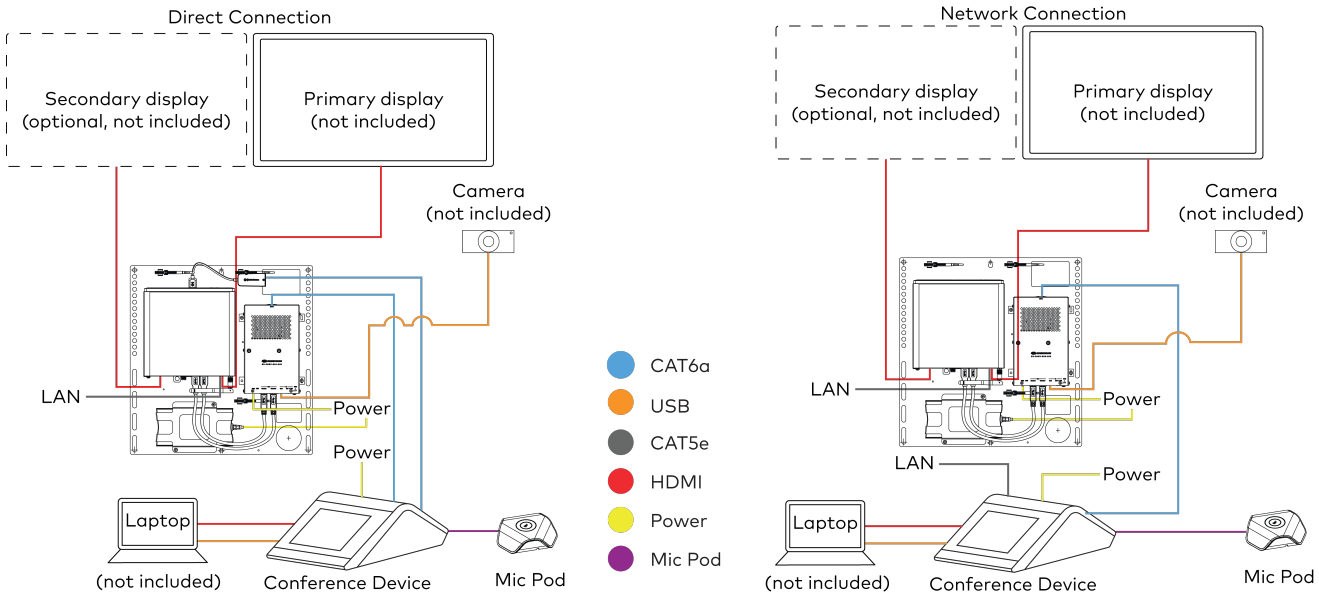

Make Connections

1. Make UC Engine connections as shown in the following illustrations. The conference device can communicate with the UC Engine over a direct connection or a network connection. Select one of the connection types as described below.
   - Make a direct connection for simple installation and setup. Only use the direct connect adapter to connect the conference device to the UC Engine. Do not use the direct connect adapter to connect the UC Engine to the network.

     Direct Connection

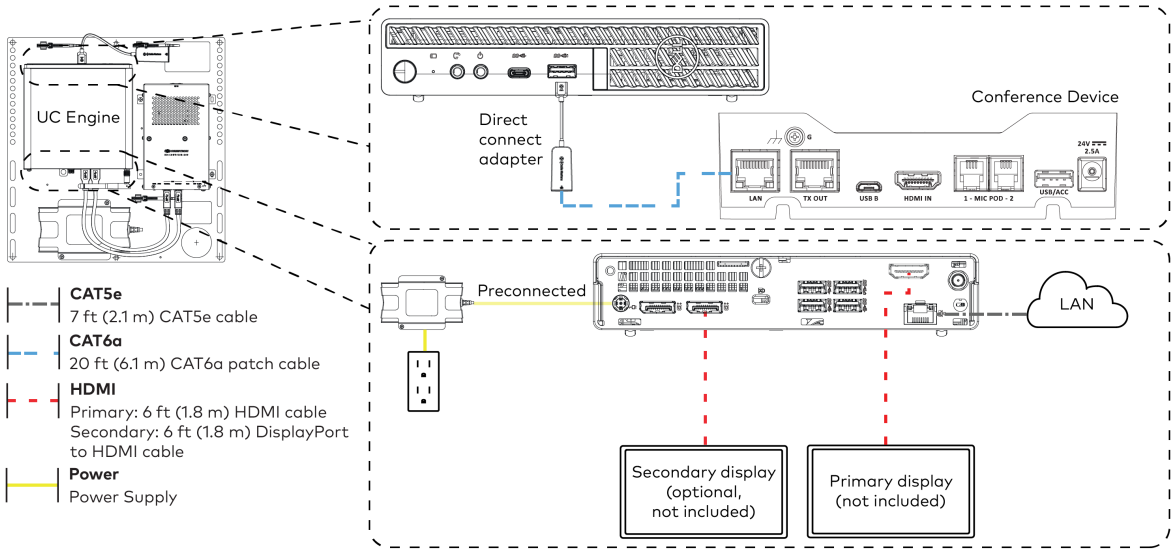

   - Make a network connection if the system is to be managed by the XiO Cloud® service.

     > **NOTE:** When a network connection is used, disconnect the direct connect adapter from the UC Engine.

     Network Connection

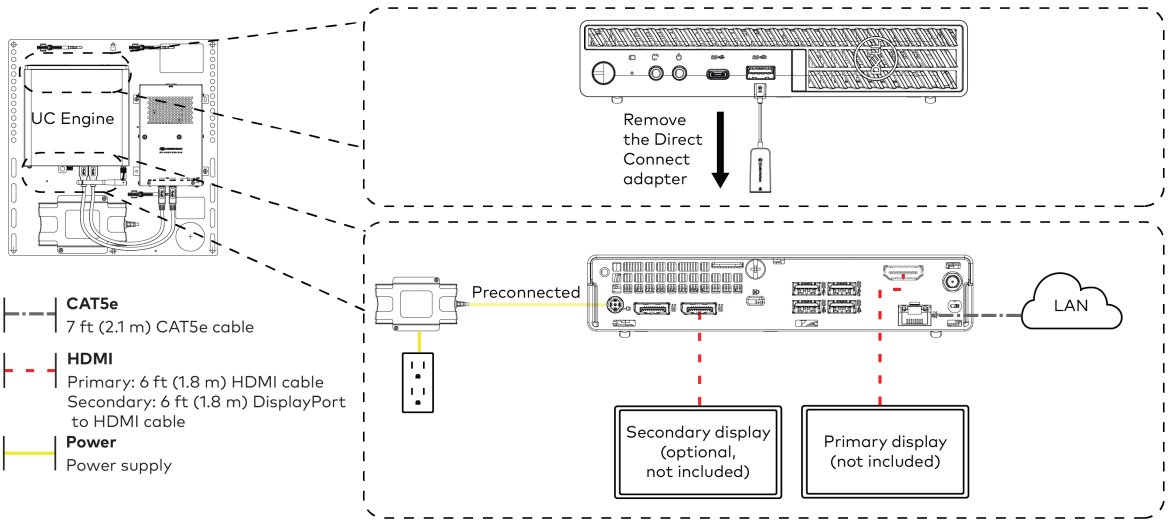

2. Make a network or direct connection on the bottom of the conference device as described in step 1. Make the remaining content ingest, laptop, mic pod, and power connections. Connect the conference device's power supply to an AC power outlet.

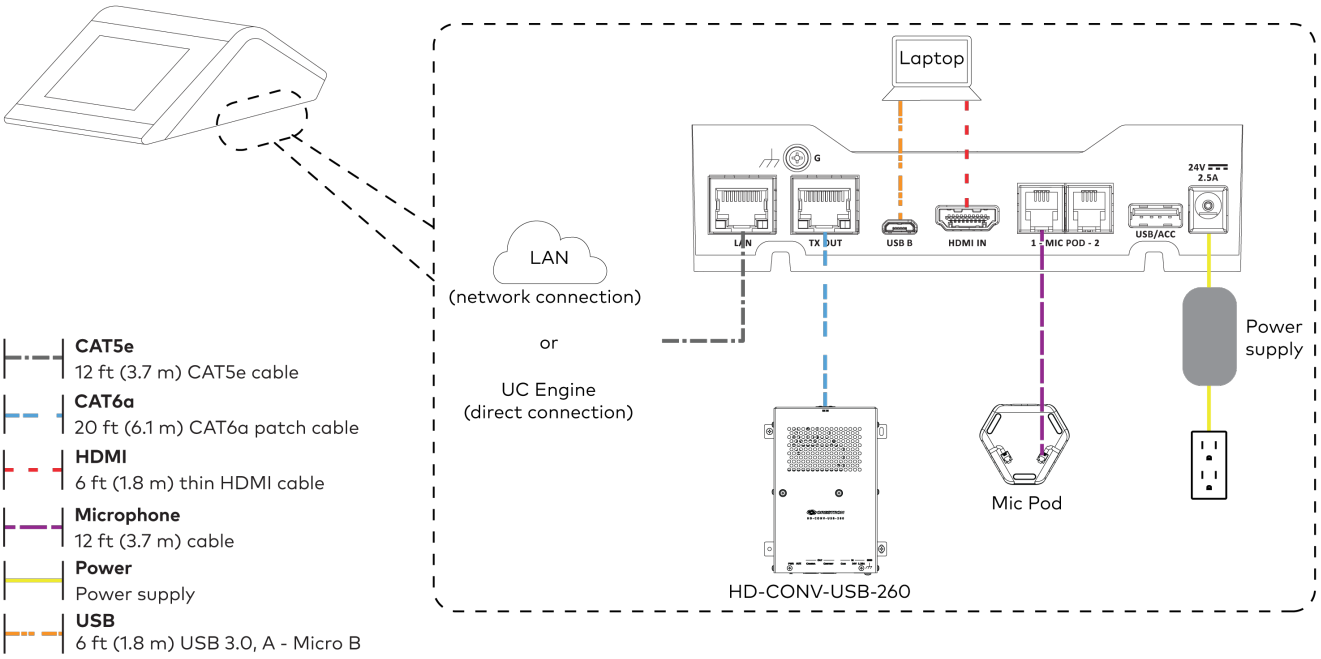

3. Connect the power supply and camera (not included) to the bottom of the content ingest device (HD-CONV-USB-260). Connect the power supplies to an AC power outlet.

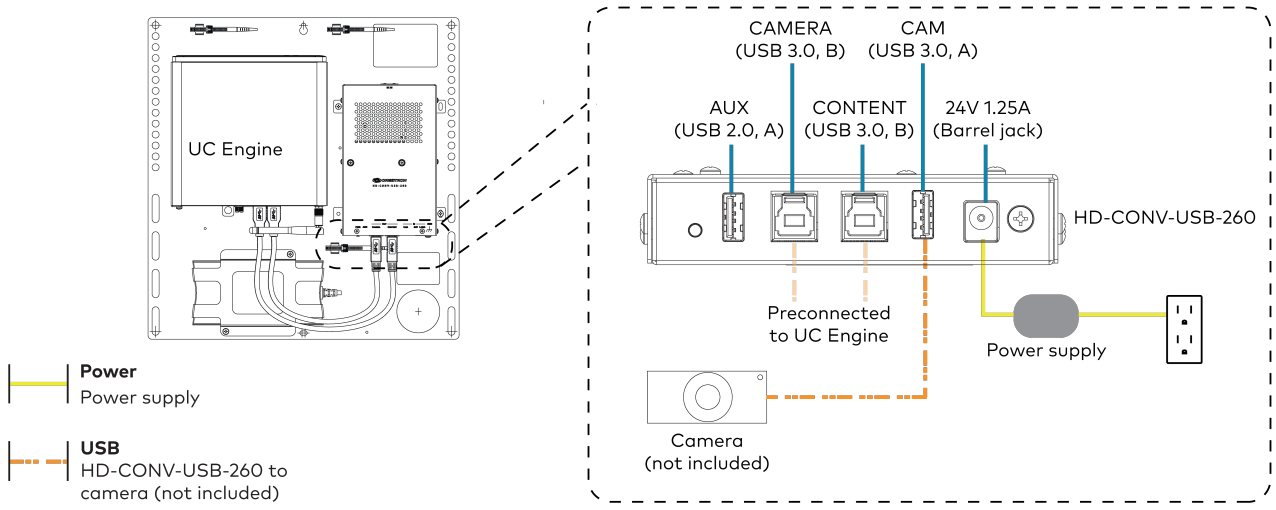

4. Bundle the cables to the bracket assembly with the integrated cable tie wraps. The cable tie wraps are reusable.

Apply Power

Press the power button on the bottom of the UC Engine and apply power to all of the other devices in the system.

Configure the Conference Device

1. On a computer, enter the IP address displayed on the conference device into a web browser to configure the device to operate in Teams Video mode.

   NOTES:
   - The device and computer must be on the same network switch and VLAN.
   - A login with administrative rights for the device is required.

2. Log in to the device and navigate to **DEVICE** > **Applications**.
3. Enter the following information in the appropriate fields:
   - **Teams Video PC Address**: Enter the IP address or hostname of the UC Engine.

     NOTE: The hostname is printed on a label affixed to the UC Engine.

   - **Teams Video PC Port**: By default, port number 49500 is used. If a different port number has been configured on the UC Engine, enter that port number instead.
   - **Teams Video Username**: Enter the login username for the UC Engine. (The default username is "admin".)
   - **Teams Video Password**: Enter the login password for the UC Engine. (The default password is "sfb".)

4. Select **Save Changes**.

Configure the System

Use the conference device and your Microsoft Teams credentials to configure the UC Engine, as described in Configuration on page 296. For detailed information on deploying Microsoft Teams Rooms, refer to the Microsoft Teams Rooms documentation.

UC-ENGINE-BRKT-T-UPGRD

Minimum Requirements

Ensure that the below requirements are met prior to setting up the system.

- A Crestron Flex tabletop conference device and camera.
- A video display (not included) connected to the UC Engine. A second display is optional.
- A Microsoft Teams Rooms provisioned account (not included).

In The Box

Qty.	Description
	UC Bracket Assembly
1	UC Bracket Assembly with UC Engine and HDMI content ingest (UC-BRKT-200-S-T-ASSY, 6512689)
2	Anchor, Drywall, Plastic, 3/8 in. x 1/2 in. (9.5 mm x 12.7 mm) (2052565)
1	Key, Anchor (4529654)
2	Screw, 8-AB x 1-1/2 in. (38.1 mm), Pan Head, Combo (2052567)
4	Tie Wrap (2047935)
	Additional Items
1	Cable, CAT6a, RJ-45 - RJ-45, 20 ft (6.1 m) (6507640)
1	Cable, CAT5e, RJ-45 - RJ-45, 7 ft (2.1 m) (6509924)
1	Cable, HDMI 2.1, 6 ft (1.8 m) (6512150)
1	Cable, HDMI, 20 ft (6.1 m) (6503567)
1	Cable, DisplayPort to HDMI, 6 ft (1.8 m) (6508282)
1	Cable, USB Extension, USB Type A Male-to-Female, 15 ft (4.6 m) (6508260)

Mount Devices

Mount the UC Bracket Assembly

Mount the UC Bracket Assembly to VESA® compliant display devices, a wall, or other building structure. Anchors and screws are supplied for installation on walls with 3/8 in. (9.5 mm) to 3/4 in. (19 mm) thickness.

CAUTION: Preinstalled screws may protrude from the back of the UC Bracket Assembly. Exercise caution when handling the UC Bracket Assembly to avoid scratching or damaging surfaces.

NOTE: The integrated cable tie wraps are reusable. Avoid damaging the cable tie wraps.

Configure the Conference Device

Prior to making system connections, deployed conference devices must be configured to operate as part of a complete Microsoft Teams system. Some deployed conference devices may be operating in Crestron Default mode.

To configure the conference device to operate in Microsoft Teams mode:

1. On a computer, enter the IP address displayed on the conference device into a web browser.

   NOTES:

   - The device and computer must be on the same network switch and VLAN.
   - A login with administrative rights for the device is required.

2. Log in to the device and navigate to **DEVICE** > **Applications**.
3. From the **Application Mode** drop down menu, select **Teams Video**.
4. Select **Save Changes**. The conference device will reboot in Microsoft Teams mode and log out all users.
5. Download the latest CCS-UC-1-T-V firmware from www.crestron.com/firmware.
6. Log in to the device and navigate to **DEVICE** > **Device Management**.
7. In the **Firmware** section, select **Firmware Upgrade**. Upload the firmware downloaded in step 5. When the firmware upload is complete, the device will reboot and log out all users.
8. Log in to the device and navigate to **DEVICE** > **Device Management**.
9. In the **Maintenance** section, select **Restore** to reset the device to the factory default settings.

Identify the UC Bracket Assembly

The UC Bracket Assembly is available in two models. Identify the model included with your Crestron Flex system. Tap or click the corresponding image below to navigate to the appropriate connection instructions.

UC Bracket Assembly with HD-CONV-USB-200

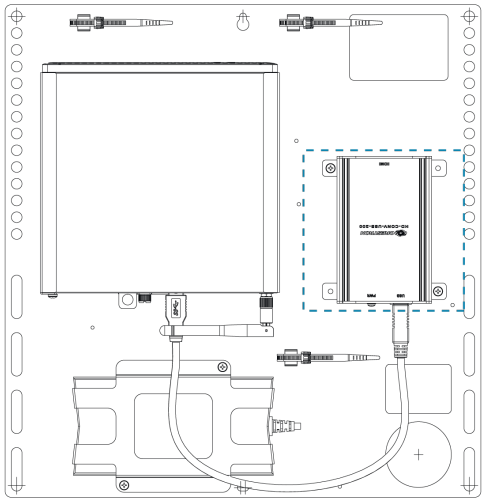

UC Bracket Assembly with HD-CONV-USB-300

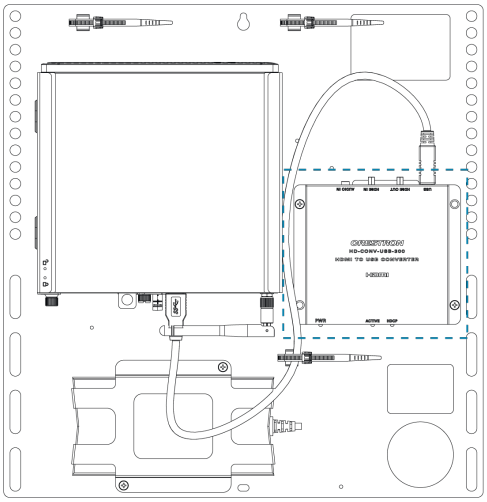

System Overview

For UC Bracket Assembly with HD-CONV-USB-200

When connections are complete, the system appears as shown below. Refer to Make Connections on page 282 for detailed connection instructions.

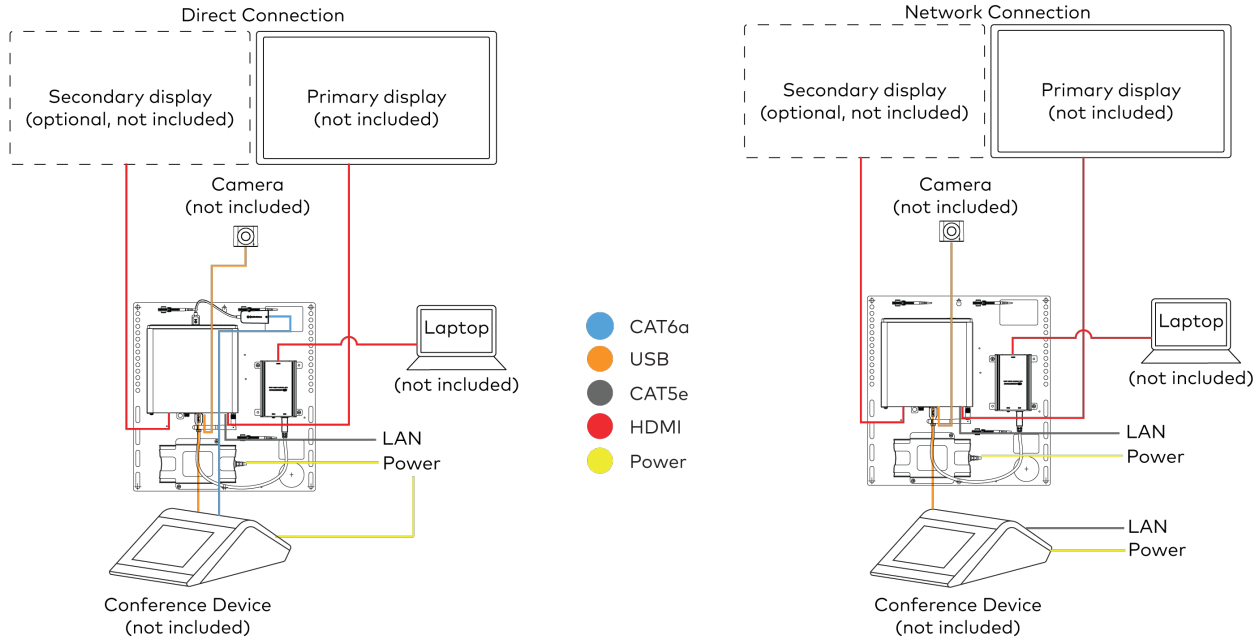

For UC Bracket Assembly with HD-CONV-USB-300

When connections are complete, the system appears as shown below. Refer to Make Connections on page 282 for detailed connection instructions.

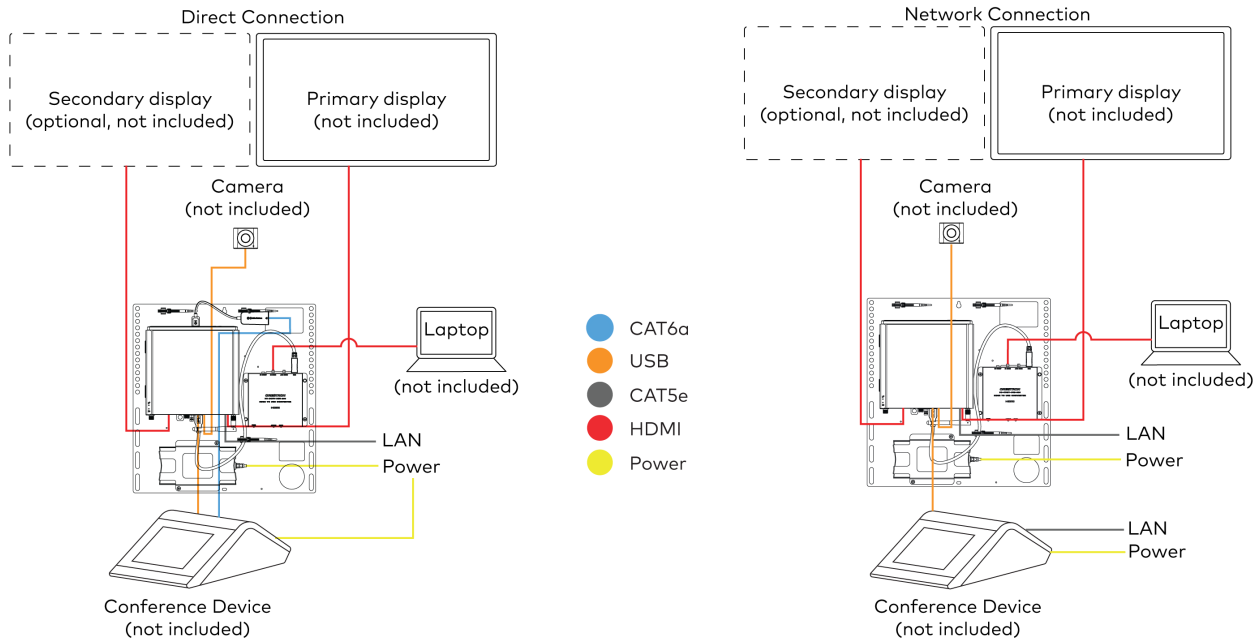

Make Connections

NOTE: For reference, the UC Bracket Assembly is shown with the HD-CONV-USB-200 in the following connection diagrams. Unless otherwise indicated in this guide, the connections remain the same for the UC Bracket Assembly with HD-CONV-USB-200 and HD-CONV-USB-300.

1. Make UC Engine connections as shown in the following illustrations. The conference device can communicate with the UC Engine over a direct connection or a network connection. Select one of the connection types as described below.
   - Make a direct connection for simple installation and setup. Only use the direct connect adapter to connect the conference device to the UC Engine. Do not use the direct connect adapter to connect the UC Engine to the network.

     Direct Connection

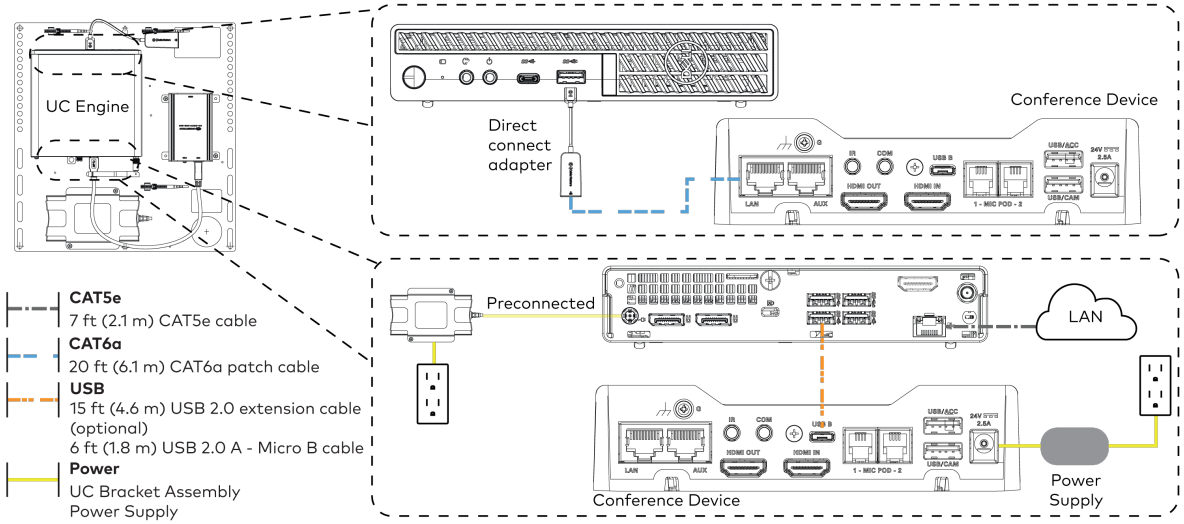

- Make a network connection if the system is to be managed by the XiO Cloud® service.

> **NOTE:** When a network connection is used, disconnect the direct connect adapter from the UC Engine.

Network Connection

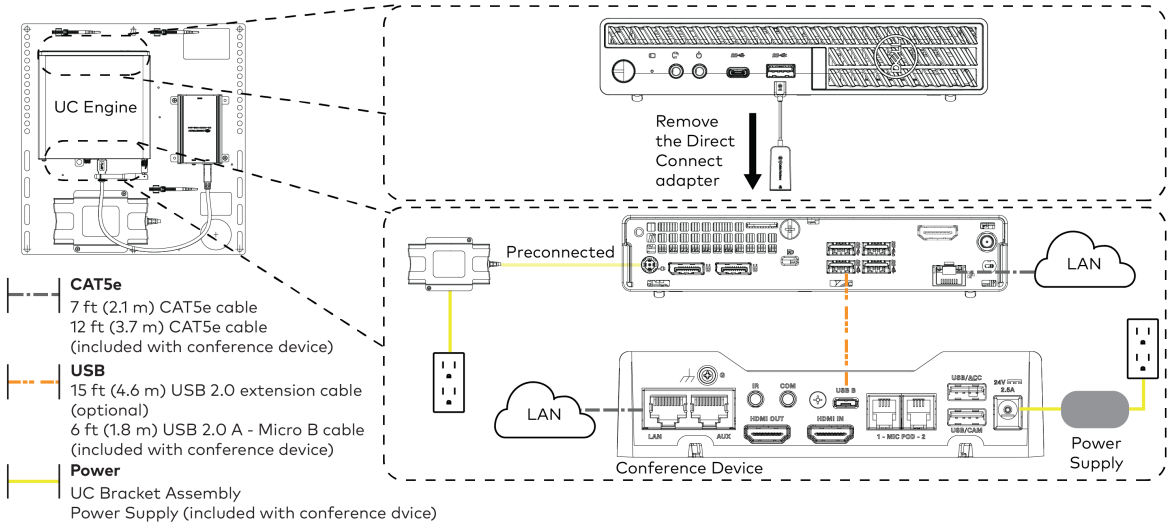

2. Connect displays to the UC Engine.

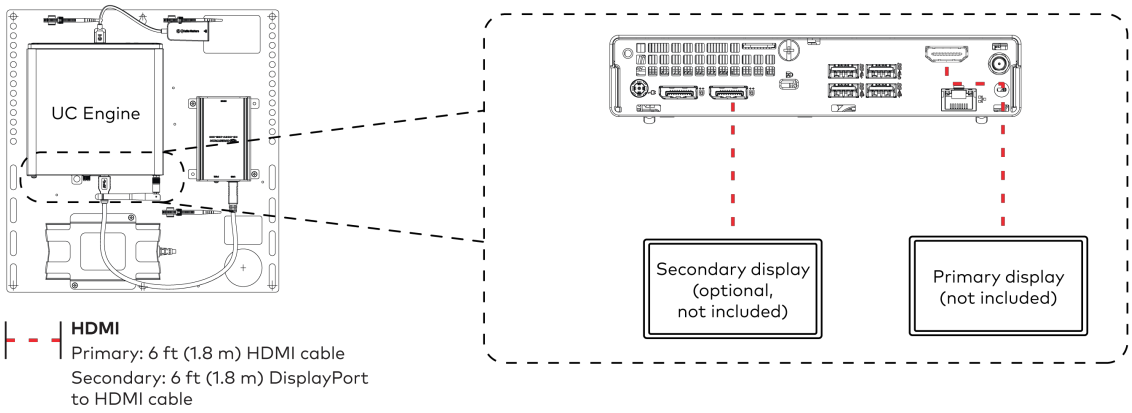

3. Connect a camera (not included) to the UC Engine as shown in the image below. Do not connect the camera to any of the other USB ports.

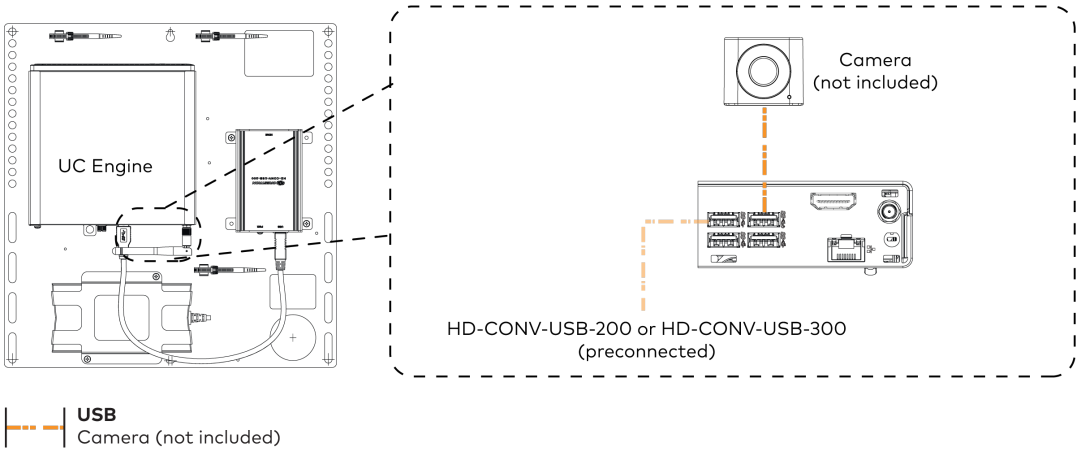

4. Connect a laptop to the HD-CONV-USB-200 or HD-CONV-USB-300.

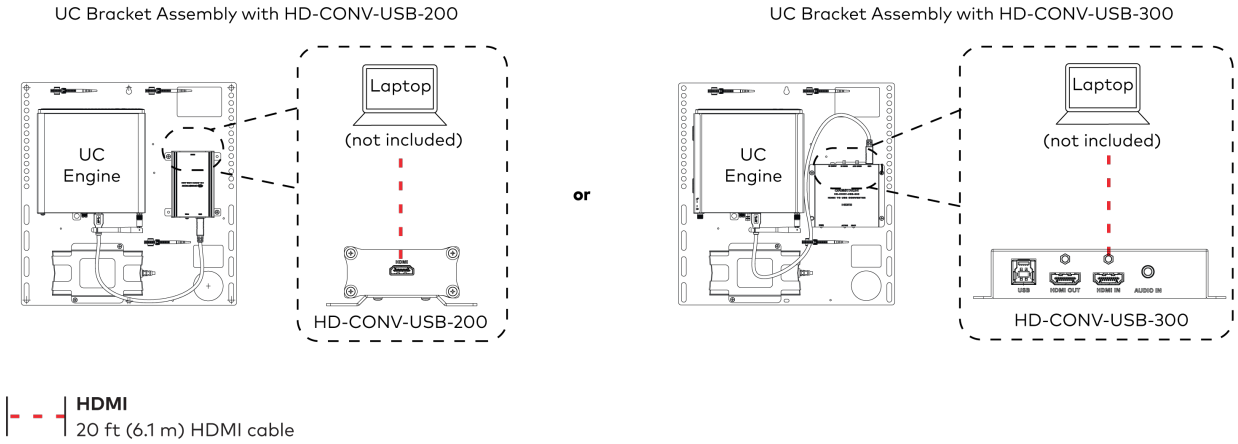

5. Bundle the cables to the bracket assembly with the integrated cable tie wraps. The cable tie wraps are reusable.

Bundle Cables

Bundle the cables together and use a provided tie wrap to secure the bundle to one of the positions on the cable retention plate at the rear of the device. Avoid bundling power and data cables together.

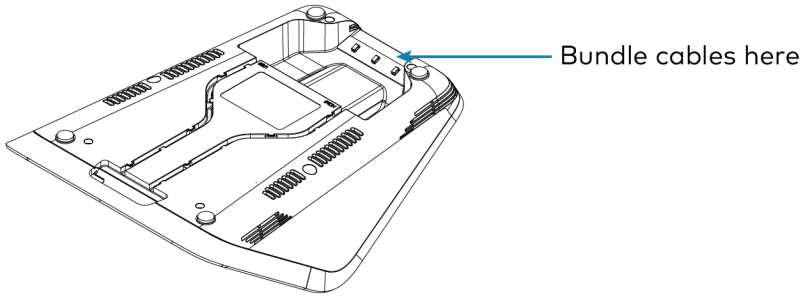

Apply Power

Press the power button on the bottom of the UC Engine and apply power to all of the other devices in the system. The conference device will display its IP address.

Complete the Conference Device Configuration

> **NOTE:** If a Direct Connection was made between the conference device and the UC Engine, skip to Configure the System on page 285.

1. On a computer, enter the IP address displayed on the conference device into a web browser.

   > **NOTES:**
   > - The device and computer must be on the same network switch and VLAN.
   > - A login with administrative rights for the device is required.

2. Log in to the device and navigate to **DEVICE** > **Applications**.
3. Enter the following information in the appropriate fields:
   - **Teams Video PC Address**: Enter the IP address or hostname of the UC Engine.

     > **NOTE:** The hostname is printed on a label affixed to the UC Engine.

   - **Teams Video PC Port**: By default, port number 49500 is used. If a different port number has been configured on the UC Engine, enter that port number instead.
   - **Teams Video Username**: Enter the login username for the UC Engine. (The default username is "admin".)
   - **Teams Video Password**: Enter the login password for the UC Engine. (The default password is "sfb".)
4. Select **Save Changes**.

Configure the System

Use the conference device and your Microsoft Teams credentials to configure the UC Engine, as described in Configuration on page 296. For detailed information on deploying Microsoft Teams Rooms, refer to the Microsoft Teams Rooms documentation.

UC-ENGINE-BRKTX-T-UPGRD

Minimum Requirements

Ensure that the below requirements are met prior to setting up the system.

- A Crestron Flex tabletop conference device and camera.
- A video display (not included) connected to the UC Engine. A second display is optional.
- A Microsoft Teams Rooms provisioned account (not included).

In The Box

Qty.	Description
	UC Bracket Assembly
1	UC Bracket Assembly with UC Engine and HDMI or AV over CAT5 content ingest (UC-BRKT-260-P-T-ASSY, 6512691)
1	Power pack (2045870)
2	Anchor, Drywall, Plastic, 3/8 in. x 1/2 in. (9.5 mm x 12.7 mm) (2052565)
1	Key, Anchor (4529654)
2	Screw, 8-AB x 1-1/2 in. (38.1 mm), Pan Head, Combo (2052567)
4	Tie Wrap (2047935)
	Additional Items
1	Cable, CAT6a, RJ-45 - RJ-45, 20 ft (6.1 m) (6507640)
1	Cable, CAT5e, RJ-45 - RJ-45, 7 ft (2.1 m) (6509924)
1	Cable, DisplayPort to HDMI, 6 ft (1.8 m) (6508282)
1	Camera wall mount kit (6510998)

Mount Devices

Mount the UC Bracket Assembly

Mount the UC Bracket Assembly to VESA® compliant display devices, a wall, or other building structure. Anchors and screws are supplied for installation on walls with 3/8 in. (9.5 mm) to 3/4 in. (19 mm) thickness.

CAUTION: Preinstalled screws may protrude from the back of the UC Bracket Assembly. Exercise caution when handling the UC Bracket Assembly to avoid scratching or damaging surfaces.

NOTE: The integrated cable tie wraps are reusable. Avoid damaging the cable tie wraps.

Configure the Conference Device

Prior to making system connections, deployed conference devices must be configured to operate as part of a complete Microsoft Teams system. Some deployed conference devices may be operating in Crestron Default mode.

To configure the conference device to operate in Microsoft Teams mode:

1. On a computer, enter the IP address displayed on the conference device into a web browser.

   NOTES:

   - The device and computer must be on the same network switch and VLAN.
   - A login with administrative rights for the device is required.

2. Log in to the device and navigate to **DEVICE** > **Applications**.
3. From the **Application Mode** drop down menu, select **Teams Video**.
4. Select **Save Changes**. The conference device will reboot in Microsoft Teams mode and log out all users.
5. Download the latest CCS-UC-1-T-V firmware from www.crestron.com/firmware.
6. Log in to the device and navigate to **DEVICE** > **Device Management**.
7. In the **Firmware** section, select **Firmware Upgrade**. Upload the firmware downloaded in step 5. When the firmware upload is complete, the device will reboot and log out all users.
8. Log in to the device and navigate to **DEVICE** > **Device Management**.
9. In the **Maintenance** section, select **Restore** to reset the device to the factory default settings.

System Overview

When connections are complete, the system appears as shown below. Refer to Make Connections on page 288 for detailed connection instructions.

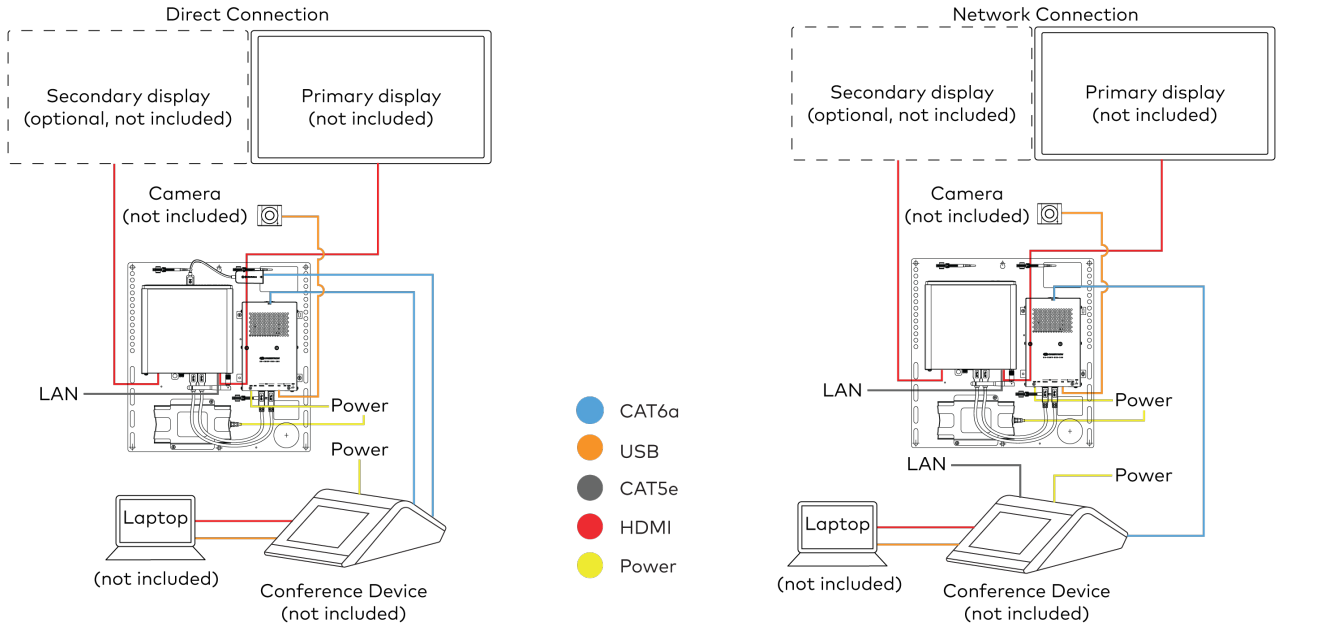

Make Connections

1. Make UC Engine connections as shown in the following illustrations. The conference device can communicate with the UC Engine over a direct connection or a network connection. Select one of the connection types as described below.
   - Make a direct connection for simple installation and setup. Only use the direct connect adapter to connect the conference device to the UC Engine. Do not use the direct connect adapter to connect the UC Engine to the network.

     Direct Connection

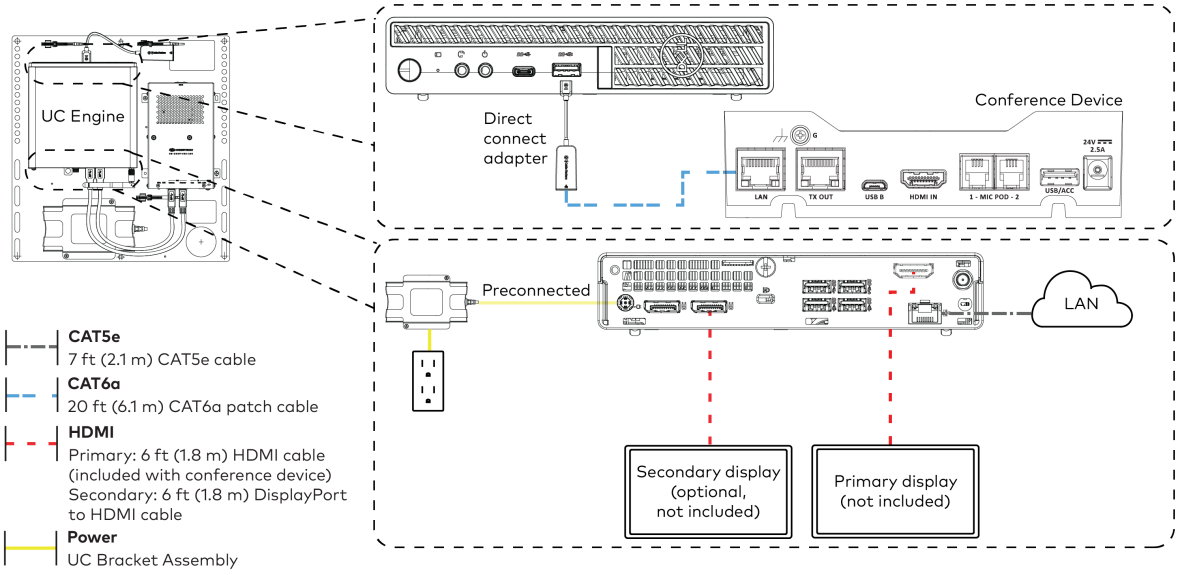

   - Make a network connection if the system is to be managed by the XiO Cloud® service.

     > **NOTE:** When a network connection is used, disconnect the direct connect adapter from the UC Engine.

     Network Connection

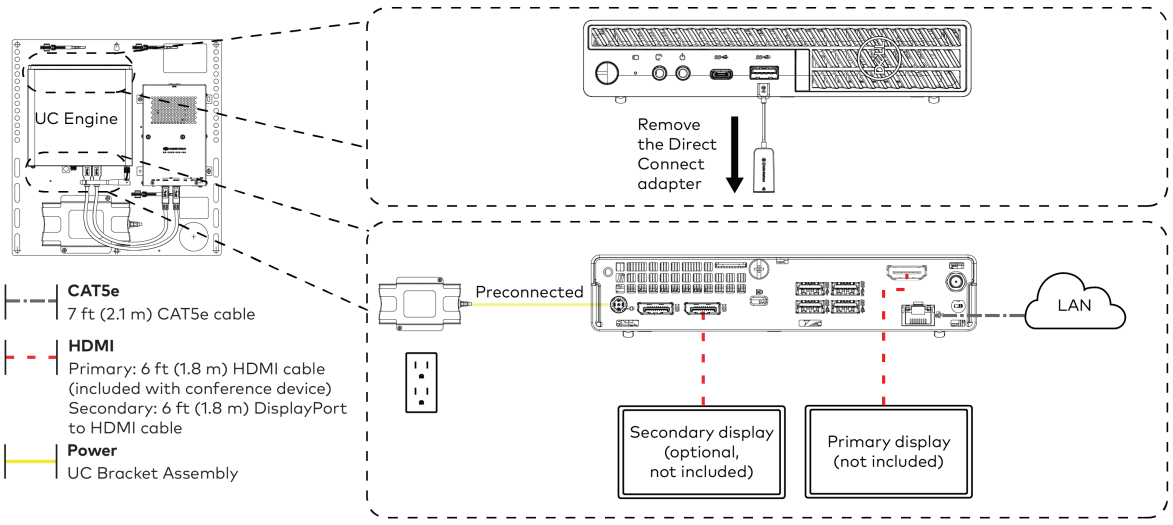

2. Connect the power supply and camera to the bottom of the content ingest device (HD-CONV-USB-260). Connect the power supply to an AC power outlet.

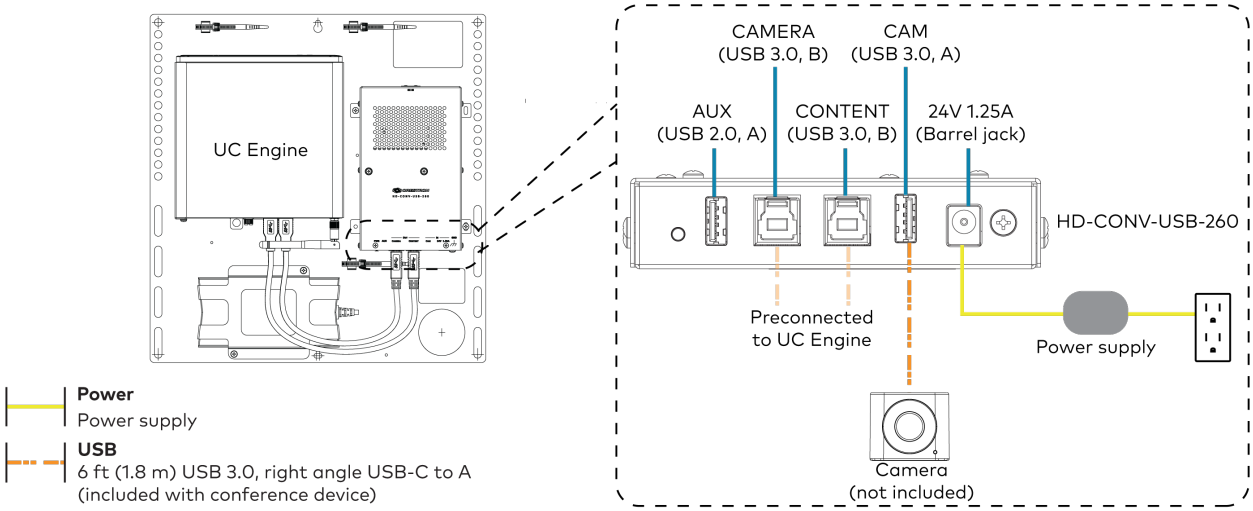

3. Make a network or direct connection on the bottom of the conference device as described in step 1. Make the remaining content ingest, laptop, and power connections. Connect the conference device's power supply to an AC power outlet.

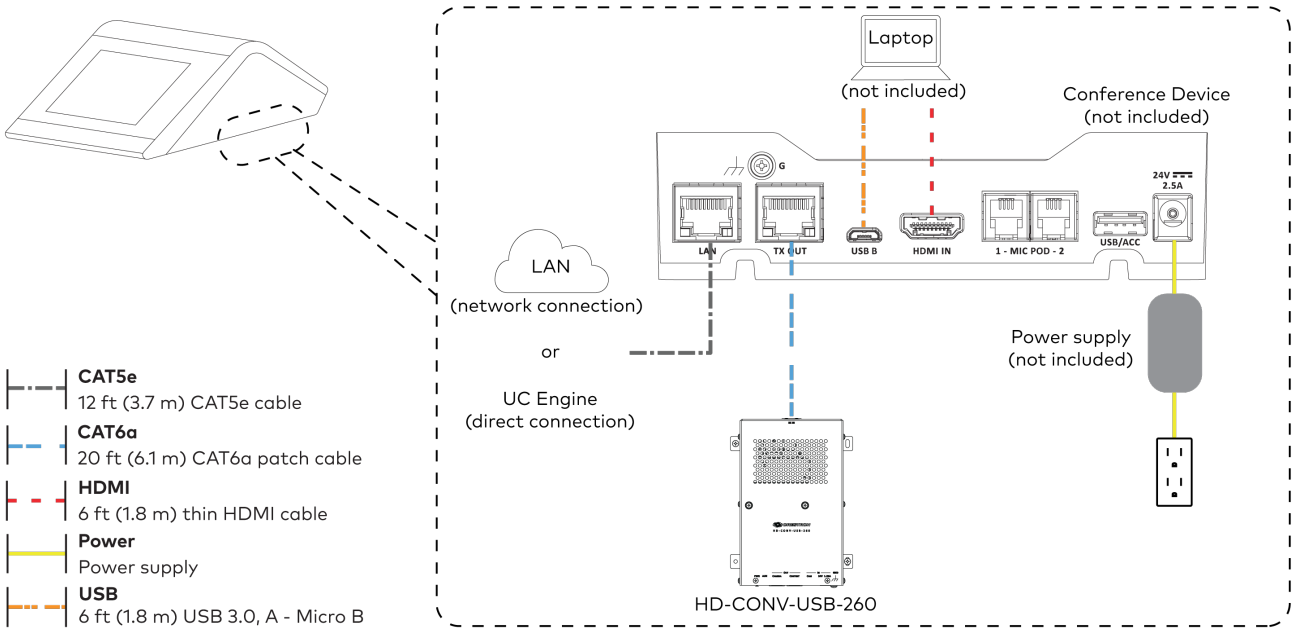

(All cables are included with the conference device)

4. Bundle the cables to the bracket assembly with the integrated cable tie wraps. The cable tie wraps are reusable.

Bundle Cables

Bundle the cables together and use a provided tie wrap to secure the bundle to one of the positions on the cable retention plate at the rear of the device. Avoid bundling power and data cables together.

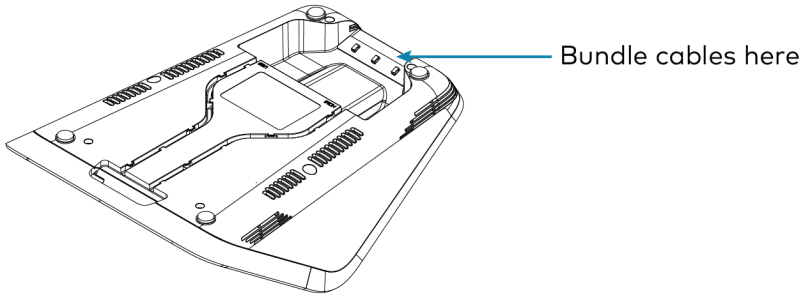

Apply Power

Press the power button on the bottom of the UC Engine and apply power to all of the other devices in the system.

Complete the Conference Device Configuration

> **NOTE:** If a Direct Connection was made between the conference device and the UC Engine, skip to Configure the System on page 291.

1. On a computer, enter the IP address displayed on the conference device into a web browser.

   NOTES:
   - The device and computer must be on the same network switch and VLAN.
   - A login with administrative rights for the device is required.

2. Log in to the device and navigate to **DEVICE** > **Applications**.
3. Enter the following information in the appropriate fields:
   - **Teams Video PC Address**: Enter the IP address or hostname of the UC Engine.

     NOTE: The hostname is printed on a label affixed to the UC Engine.

   - **Teams Video PC Port**: By default, port number 49500 is used. If a different port number has been configured on the UC Engine, enter that port number instead.
   - **Teams Video Username**: Enter the login username for the UC Engine. (The default username is "admin".)
   - **Teams Video Password**: Enter the login password for the UC Engine. (The default password is "sfb".)
4. Select **Save Changes**.

Configure the System

Use the conference device and your Microsoft Teams credentials to configure the UC Engine, as described in Configuration on page 296. For detailed information on deploying Microsoft Teams Rooms, refer to the Microsoft Teams Rooms documentation.

UC-ENGINE-BRKT-T-UPGRD-BRKTX

Minimum Requirements

Ensure that the below requirements are met prior to setting up the system.

- A Microsoft Teams Rooms provisioned account (not included).
- A fully functional existing B/MM/C series small or custom room solution with standard bracket assembly.

In The Box

Qty.	Description
	UC Bracket Assembly
1	UC Bracket Assembly with UC Engine and HDMI or AV over CAT5 content ingest (UC-BRKT-260-P-T-ASSY, 6512691)
1	Power pack (2045870)
2	Anchor, Drywall, Plastic, 3/8 in. x 1/2 in. (9.5 mm x 12.7 mm) (2052565)
1	Key, Anchor (4529654)
2	Screw, 8-AB x 1-1/2 in. (38.1 mm), Pan Head, Combo (2052567)
4	Tie Wrap (2047935)
	UC Presentation Transmitter with Cable Organizer
1	Presentation transmitter (6510936)
1	Cable Organizer
1	Power pack (2056363) with cord (2001134)
1	Bracket, power supply (2056257)
1	Cable, USB to USB, 6.56 ft (2 m) (2056116)
1	Cable, HDMI®, 6.56 ft (2 m) (2056117)
1	Cable, USB 2.0, A to Micro B, 6.56 ft (2 m) (2055504)
8	Screw, 10-9 x 5/8 in. (15.9 mm), Pan Head, Phillips, Black (2054365)
	Additional Items
1	Cable, CAT6a, RJ-45 - RJ-45, 20 ft (6.1 m) (6507640)
1	Cable, DisplayPort to HDMI, 6 ft (1.8 m) (6508282)

Mount Devices

Mount the UC Bracket Assembly

Mount the UC Bracket Assembly to VESA® compliant display devices, a wall, or other building structure. Anchors and screws are supplied for installation on walls with 3/8 in. (9.5 mm) to 3/4 in. (19 mm) thickness.

CAUTION: Preinstalled screws may protrude from the back of the UC Bracket Assembly. Exercise caution when handling the UC Bracket Assembly to avoid scratching or damaging surfaces.

NOTE: The integrated cable tie wraps are reusable. Avoid damaging the cable tie wraps.

Mount the UC Presentation Transmitter

Mount the UC Presentation Transmitter to the underside of a table using the supplied screws. The supplied screws support installation on tables with a thickness of 1 in. (25.4 mm) minimum.

Mount the Cable Organizer for the UC-PR

Mount the Cable Organizer according to the Cable Organizer for the UC-PR (Doc. 8966).

Connections

The UC-ENGINE-BRKT-T-UPGRD-BRKTX kit contains all the items that can be used to upgrade an existing UC-B/C/MM series small or custom room solution to UC-BX/CX/MMX series advanced BYOD solution.

Upgrading a UC-B Series solution

1. Replace the existing standard bracket assembly with the included UC-BRKT-260-P-T-ASSY bracket assembly.
2. Use the existing components, cables, and the new included cables to make connections as detailed in the following section:
    - UC-BX30-T and UC-BX30-T-WM on page 118
    - UC-BX31-T and UC-BX31-T-WM on page 148

Upgrading a UC-C Series solution

1. Replace the existing standard bracket assembly with the included UC-BRKT-260-P-T-ASSY bracket assembly.
2. Use the existing components, cables, and the new included cables to make connections as detailed in the following section:
    - UC-CX100-T and UC-CX100-T-WM on page 164

Upgrading a UC-MM Series solution

1. Replace the existing standard bracket assembly with the included UC-BRKT-260-P-T-ASSY bracket assembly.
2. Use the existing components, cables, and the new included cables to make connections as detailed in the following sections:
    - UC-MMX30-T and UC-MMX30-T-I on page 195
    - UC-MMX30-NC-T and UC-MMX30-NC-T-I on page 212

Microsoft Teams Rooms with ASUS UC Engine

To install any Crestron Flex solutions listed below, follow the respective link to the Quick Start guide for instructions.

Crestron Flex Solutions	Quick Start Guide
• UC-B30-T	Quick Start: UC-B30-T
• UC-BX30-T	Quick Start: UC-BX30-T
• UC-B30-T-WM	Quick Start: UC-B30-T-WM
• UC-BX30-T-WM	Quick Start: UC-BX30-T-WM
• UC-C100-T	Quick Start: UC-C100-T
• UC-C100-T-WM	Quick Start: UC-C100-T-WM
• UC-CX100-T	Quick Start: UC-CX100-T
• UC-CX100-T-WM	Quick Start: UC-CX100-T-WM
• UC-MM30-T • UC-MM30-T-I	Quick Start: UC-MM30-T(-I)
• UC-MMX30-T • UC-MMX30-T-I	Quick Start: UC-MMX30-T(-I)
• UC-M50-T	Quick Start: UC-M50-T
• UC-M50-T-UPGRD	Quick Start: UC-M50-T-UPGRD
• UC-MX50-T	Quick Start: UC-MX50-T
• UC-MX50-T-UPGRD	Quick Start: UC-MX50-T-UPGRD
• UC-M70-T	Quick Start: UC-M70-T
• UC-MX70-T	Quick Start: UC-MX70-T

Configuration

Microsoft Teams Rooms Software Updates

Software updates for Microsoft Teams Rooms systems and associated control devices (Crestron Mercury devices or touch screens) are performed through the UC Engine's Windows Update service.

> **NOTE:** For information on managing Windows updates, refer to Manage Windows Updates.

The Microsoft Teams Rooms application is updated from the Windows Store.

Control device firmware provided by the Windows Update service may be an earlier version than firmware available on the Crestron website. Control devices running higher firmware versions than that contained in the Windows Update package will be downgraded to the firmware contained in the Windows Update package.

Microsoft Teams Rooms systems can be managed with Microsoft Intune® software. For more information, visit Managing Teams Meeting Rooms with Intune.

Crestron Settings App

After setting up Microsoft Teams Rooms, use the Crestron Settings app for further configuration.

> **NOTE:** Crestron recommends using a keyboard and mouse connected to the UC Engine when using the Crestron Settings app. If a USB port is not available, temporarily disconnect the system's camera.

To open the Crestron Settings App, click > **Crestron** folder > **Crestron Settings**. The Crestron Settings app opens.

> **NOTE:** When opening the Crestron Settings app for the first time, you must agree to the CRESTRON UNIFIED COMMUNICATIONS SOFTWARE LICENSE AGREEMENT. Click **I Agree** to continue to the Crestron Settings app.

Crestron Settings App

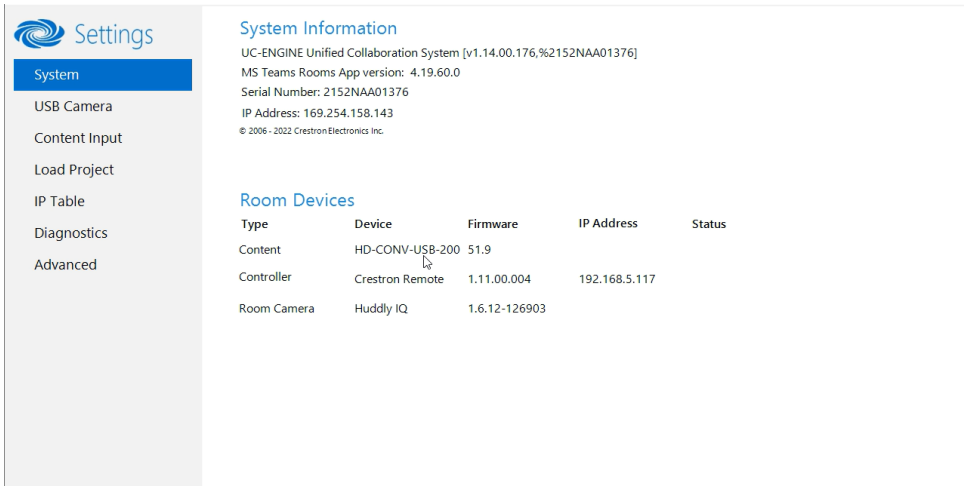

System

Use the **System** menu to view firmware versions of connected system devices and the firmware packages stored on the UC Engine.

System

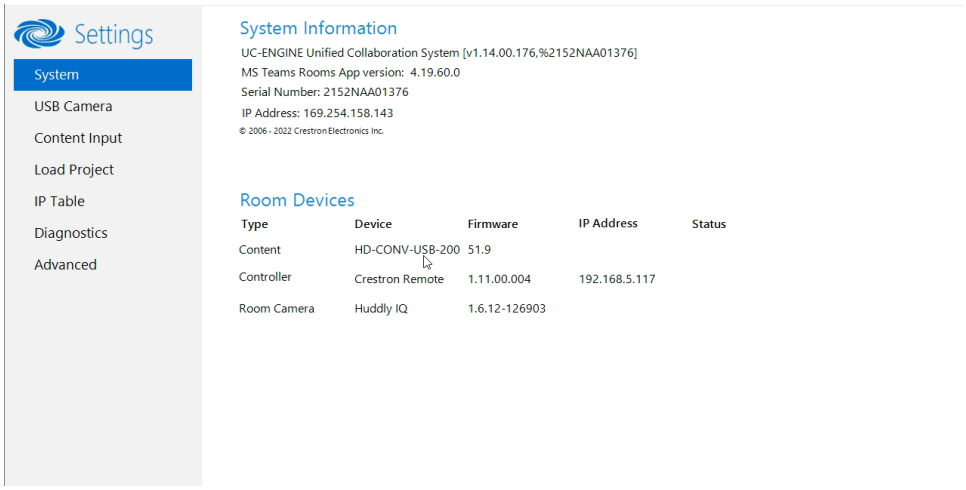

USB Camera

Click **USB Camera** to display the USB Camera menu.
Use the **USB Camera** menu to adjust the zoom, tilt, and pan, recall preset settings, store preset settings, and control the Genius Framing feature (available for specific cameras).

USB Camera

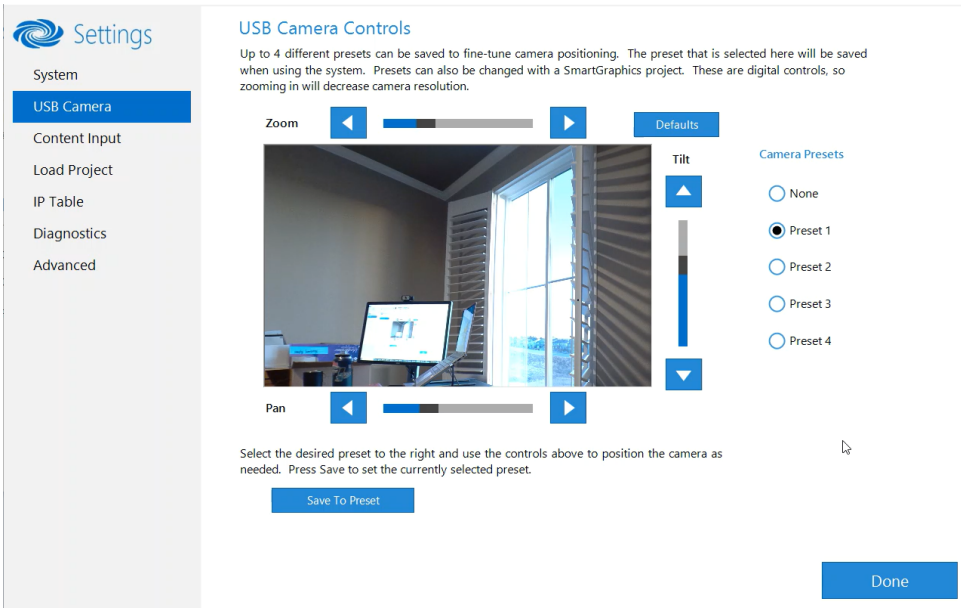

Adjust Tilt, Pan, or Zoom

The tilt, pan, and zoom on a connected camera can be remotely adjusted from the USB Camera screen.

> **NOTE:** Tilt, pan, and zoom settings may not work with all cameras.

To make an adjustment, select a preset and adjust as necessary.

- Click **Zoom I** or **H** to adjust the amount of zoom.
- Click **Pan I** or **H** to adjust the pan.
- Click **Tilt K** or **J** to adjust the camera tilt.
- Click **Defaults** to return the camera to its default settings.

Save a Preset

Tilt, pan, and zoom settings can be saved for recall later. To save a preset setting:

1. Click one of the four available Camera Presets locations on the right side of the display.
2. Adjust the tilt, pan, and zoom as described in Adjust Tilt, Pan, or Zoom on page 300.
3. Click **Save To Preset** to save the settings.

Recall a Preset

Click a Preset on the right side to recall a preset.

Genius Framing (systems with a CCS-CAM-USB-F-400 or UC-SB1-CAM-FLEX)

Crestron Flex solutions that use a CCS-CAM-USB-F-400 Huddly IQ™ Collaboration Camera or a UC-SB1-CAM-FLEX UC Video Conference Smart Soundbar & Camera can use the camera's built-in Genius Framing feature. Genius Framing automatically detects and frames people in the camera's field of view.

By the default, Genius Framing is set to **ON**. Set the switch to **OFF** to disable Genius Framing.

> **NOTE:** Genius Framing can be controlled by the XiO Cloud service if the UC Engine is registered with the service.

Content Input

Click **Content Input** to display information about the HDMI content input.

Content Input

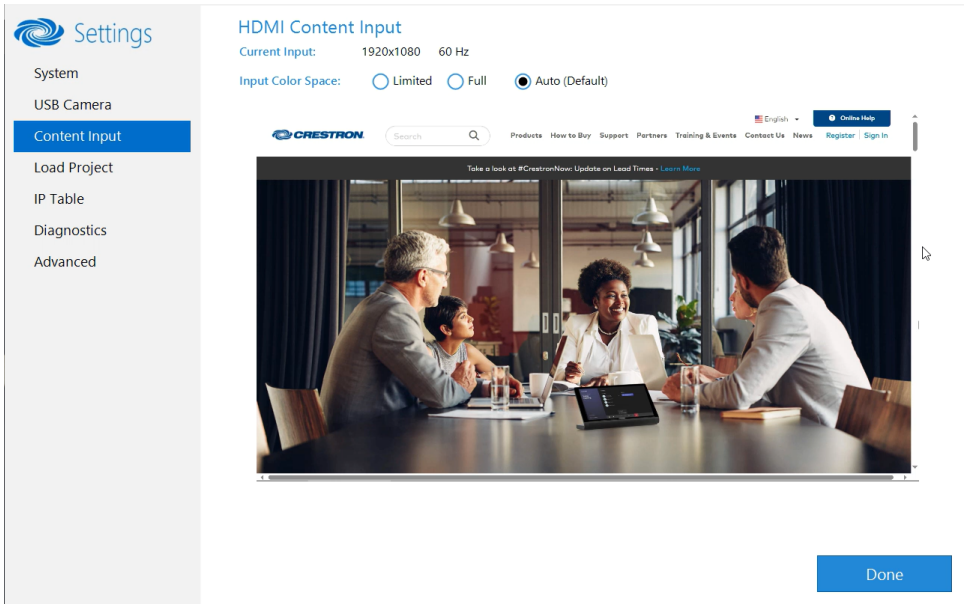

Select one of the following settings of the **Input Color Space** feature:

- **Limited**: Select if the black portion of the image appears washed out.
- **Full**: Select if the shadow detail of the picture appears missing.
- **Auto (Default)**: Default setting (selected by default).

Load Project

Crestron Flex can use custom controls as part of a Crestron control system.

Click **Load Project** to display the Load Project menu.
Microsoft Teams Rooms systems with a Crestron Mercury conference system or a touch screen use the Smart Graphics™ menu to upload a touch screen project with custom controls as part of a Crestron control system. Touch screen projects are loaded to the system from a connected USB drive.

> **NOTE:** A touch screen project can also be remotely uploaded to the system by tools such as Crestron Toolbox™ software or the XiO Cloud service. For more information, refer to the Crestron Toolbox help file and the XiO Cloud Service User Guide (Doc. 8214).

Load Project

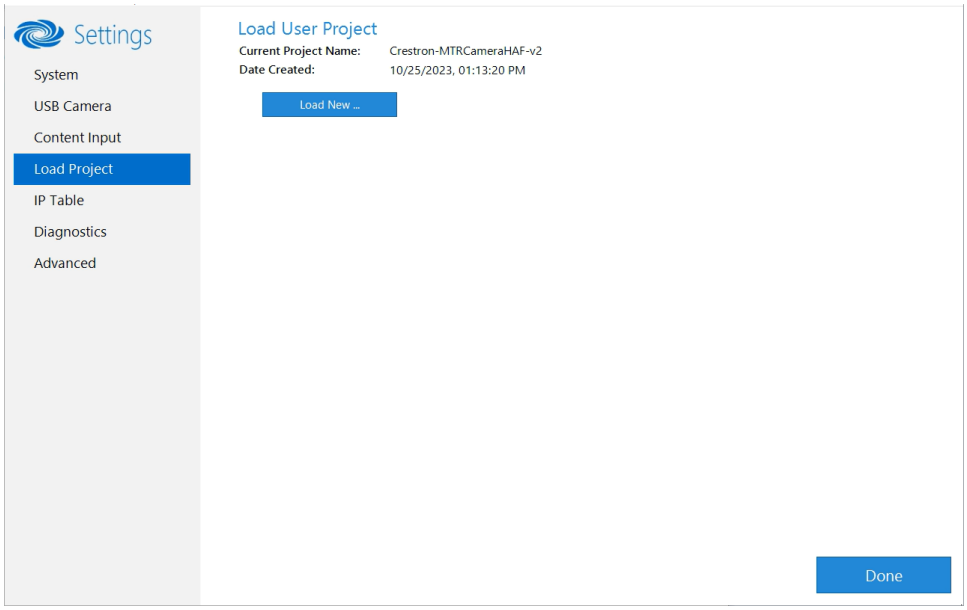

To upload a touch screen project on a Microsoft Teams Rooms system:

1. Connect a USB drive containing the project to a USB port on the UC engine.
2. Click **Load New**.
3. Navigate to the location of the project file and click **Open**. The project loads to the system.

> **NOTE:** When loading a project for the first time, you can either reboot the UC engine to load the project to the control device immediately or wait up to 20 minutes for the control button to display on the control device.

IP Table

Click **IP Table** to display the IP Table menu.
Configure the IP table to allow Crestron Flex to be used as part of a Crestron control system. An IP table is a lookup table used by Crestron Ethernet devices to map between IP IDs and IP addresses. Use the IP Table menu to enable and configure the system for communication with a Crestron control system.

> **NOTE:** A Crestron Flex's IP table can also be configured by Crestron Toolbox software. For more information, refer to the Crestron Toolbox help file.

IP Table

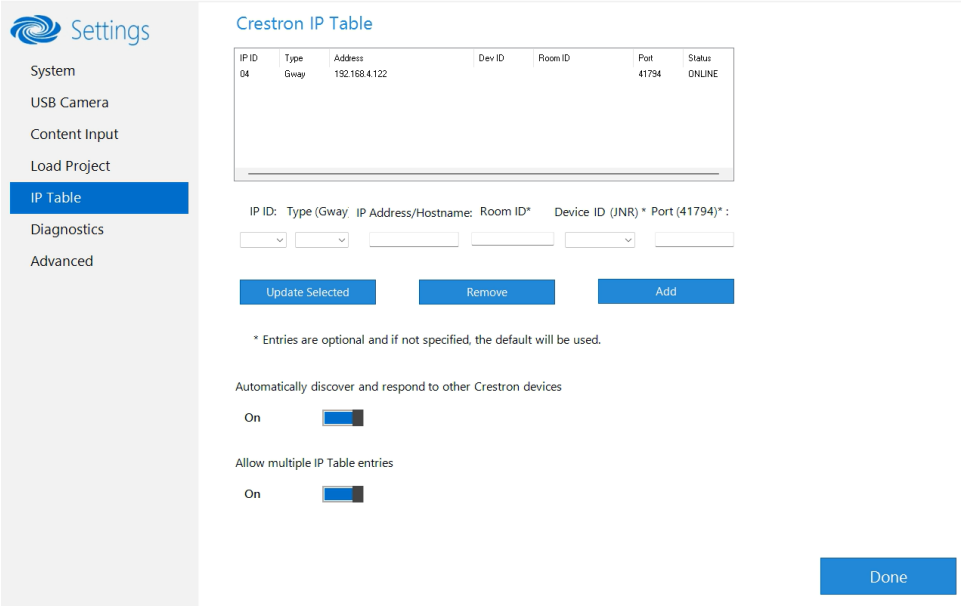

IP Table Entries

Entries in an IP table identify the control system(s) that can control Crestron Flex. Entries can be added, updated, or removed.

- Add an Entry
    a. From the IP ID drop-down list, select the system's IP ID as specified in the control system's program.

    > **NOTE:** The IP ID must match the IP ID specified for the system in the control system's program.

    b. Enter the IP address or hostname in the **IP Address/Hostname** field.
    c. If using a port other than 41794 for communications with the control system, enter it in the **Port (41794)*** field.

    > **NOTE:** This field is optional. If left blank, the default port (41794) is used.

    d. Click **Add**.
- Modify an Entry
    a. Click an entry in the IP table.
    b. Select the new IP ID, address or hostname, and port.
    c. Click **Update Selected**.
- Remove an Entry
    a. Click an entry in the IP table.
    b. Click **Remove**.

Other IP Table Functions

Set the **Automatically discover and respond to other Crestron devices** setting to **Off** to hide the system from being discovered by other devices during auto-discovery.

Multiple control systems listed on the IP table can be allowed to control the system. Set the **Allow multiple IP Table entries** setting to **Off** to allow only one control system on the IP table.

Crestron SSL

The system can use SSL technology when connecting to a Crestron control system. To configure the system to use SSL for control system communications:

1. Set the **Use SSL for control system connections** setting to **Enabled**.
2. If certificate authentication is used, set the **Certificate Authentication** setting to **On**.
3. Enter the login credentials in the **Username** and **Password** fields.

Diagnostics

Click **Diagnostics** to display the Diagnostics menu.
Use the Diagnostics menu to view and manage system logs.

Diagnostics

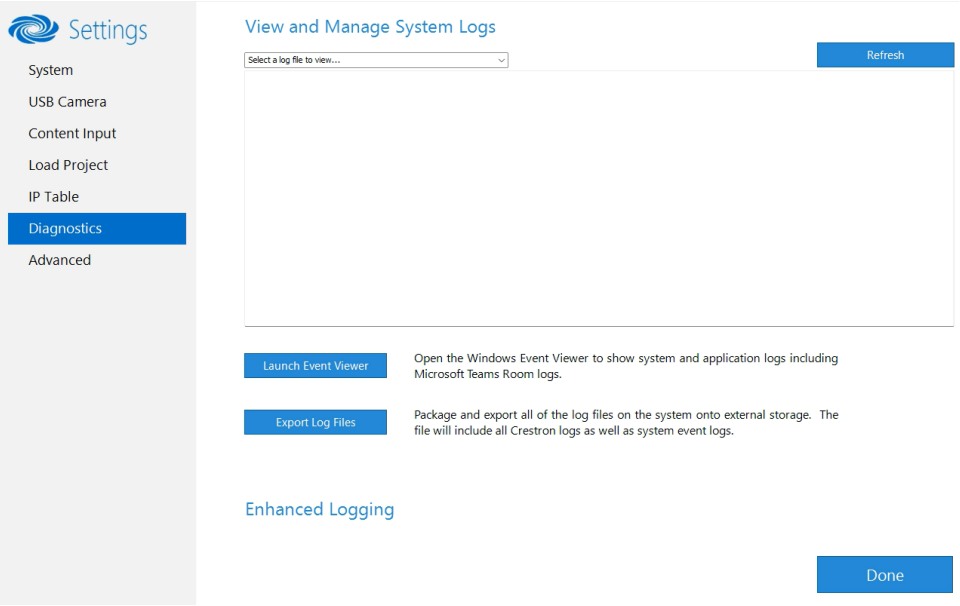

View Logs

When troubleshooting, different logs can be viewed. First, select the desired log file from the **View and Manage System Logs** drop-down list to view a specific log type. Then, click **Refresh** to view the latest log data.

Windows Event Viewer

Click **Launch Event Viewer** to open the Windows event viewer that shows system and application logs.

Export Log Files

Click **Export Log Files** to package and export all the log files (including all Crestron logs and system event logs) onto external storage.

Upload Log Files

Click **Upload Log Files** to package and upload all the log files to a Crestron server for delivery to Crestron support personnel.

> **NOTE:** Internet access is required for uploading.

Enhanced Logging

Enable the enhanced logging feature only if instructed by Crestron support for advanced troubleshooting. The enhanced logs are collected during the normal export process. Turn off enhanced logging when troubleshooting is finished.

Advanced

Click **Advanced** to display the Advanced menu.
Use the Advanced menu to configure the system with MyCrestron and Crestron Fusion software in the Cloud, to switch the UC Engine application mode, or to make the Soundbar firmware mode selection (UC-SB1-CAM-FLEX only).

Advanced

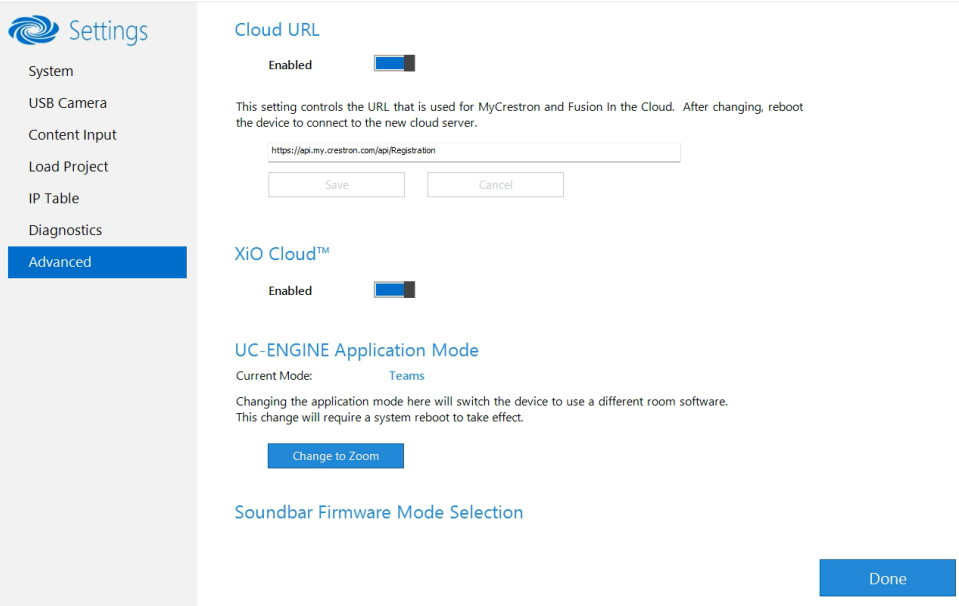

Cloud URL

Enter the URL of the Crestron Fusion server. Upon completion, the system should be brought into Crestron Fusion software as a processor. For more information, refer to the Crestron Fusion software help file.

UC-ENGINE Application Mode

Many Crestron Flex solutions that support dual displays can switch from the Microsoft Teams Rooms application to the Zoom Rooms application.

> **NOTE:** This functionality is supported by the ASUS UC engine only.

For more details on switching applications, refer to Switching from Microsoft Teams Rooms to Zoom Rooms on page 309.

Soundbar Firmware Mode Selection (for systems with UC-SB1-CAM-FLEX only)

Crestron Flex with a UC-SB1-CAM-FLEX UC Video Conference Smart Soundbar can be used with firmware that provides superior sound quality or higher volume output.

If a soundbar is connected to the system, click a firmware version to install it.

Return to the Conference System

After all changes have been made, the system should be returned to regular operation. To return to regular operation:

1. Click **Done** to return to the Windows desktop.
2. Click . A menu is displayed.
3. Click , and then click **Sign Out**. The Administrator login screen is displayed.
4. Click **Skype**.
5. Click **Sign in**. The Microsoft Teams Rooms application will start.

NOTE: If a camera was disconnected from the UC Engine to use a keyboard, disconnect the keyboard, and connect the camera to the UC Engine.

Switching from Microsoft Teams Rooms to Zoom Rooms

Minimum Firmware Requirements

- UC Engine: 1.00.16.715b
- TSW-1060 touch screen: 2.006.0063.001
- TS/TSW-1070 touch screen: 1.001.0014.001
- UC-2 Mini Tabletop conference device: 1.0.1.59
- CCS-UC-1-T-V Crestron Mercury Tabletop UC Video Conference Console: 1.4906.00015.001
- CCS-UC-1-X Crestron Mercury X Tabletop Console: 1.4160.00050.001

Change UC Engine Settings

Use one of the following methods to change the UC Engine settings:

- Crestron Settings App

> **NOTES:**
>
> - Some dual display systems cannot switch from the Microsoft Teams Rooms to the Zoom Rooms application. For example, if the Crestron Settings app does not show the **Change to Zoom** button, the system does not support the mode switch function.
> - If the XiO Cloud service manages the UC Engine, changes made in the Crestron Settings app will revert to the settings established by the XiO Cloud service.
> - Crestron recommends using a keyboard and mouse connected to the UC Engine when using the Crestron Settings app. If a USB port is not available, temporarily disconnect the system's camera.

1. Open the Crestron Settings app as described in Crestron Settings App on page 298.
2. Click **Advanced**.
3. Click **Change to Zoom** and click **Ok** to confirm. The system will reboot.

- XiO Cloud Service

> **NOTE:** Changes made from the XiO Cloud service will override any settings made from the Crestron Settings app.

1. Log in to the XiO Cloud service and select the UC Engine to switch.
2. Click the **Settings** tab.

   XiO Cloud, UC Engine, Settings tab

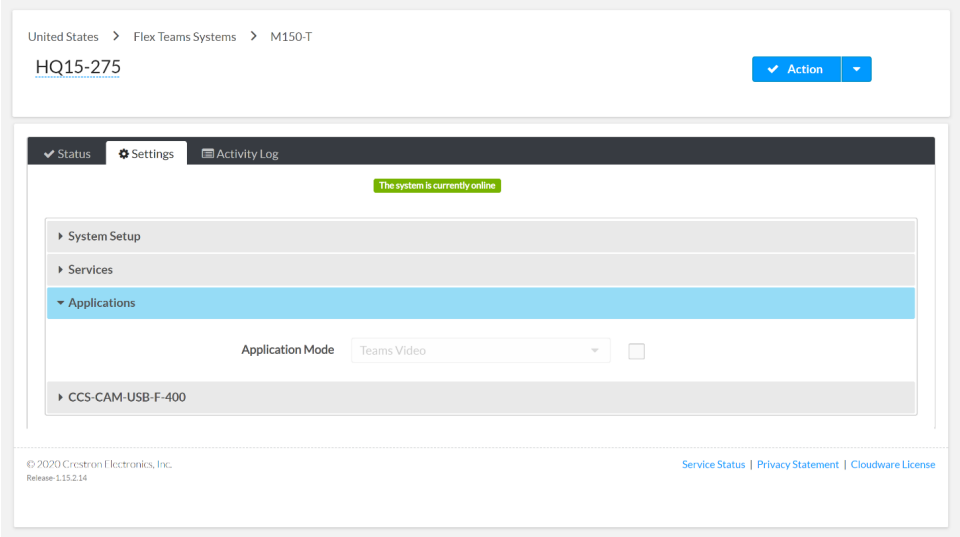

3. Click **Applications**.

   > **NOTE:** Some dual display systems cannot switch between the Microsoft Teams Rooms and the Zoom Rooms application. If the **Settings** tab does not contain an **Applications** menu, the system does not support the mode switch function.

4. Click the checkbox next to **Application Mode** to have the XiO Cloud service manage the device.

5. Select **Zoom Rooms** from the **Application Mode** drop-down list.

   XiO Cloud, UC Engine, Settings tab, Zoom Rooms selected

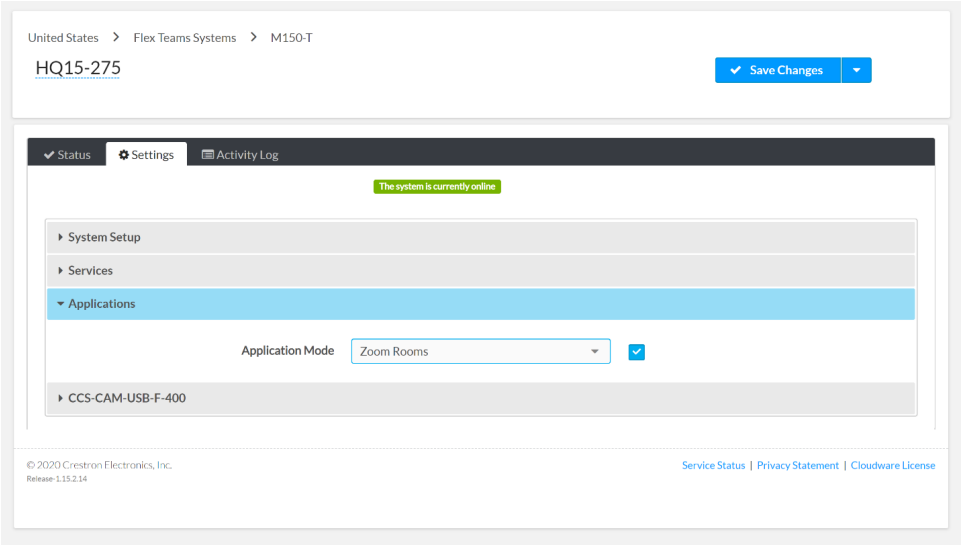

6. Click **Save Changes**. The device will reboot.

Change the Control Device's Application Mode

Set the control device's **Application Mode** to **Zoom Rooms** on:

Crestron Mercury Conference Systems

Use one of the following methods to change the Mercury conference system's application mode.

- Web Browser

> **NOTE:** If the XiO Cloud service manages the Crestron Mercury device, any changes made in the web browser will revert to the settings established by the XiO Cloud service.

1. Use a web browser to display the **DEVICE** screen of the Crestron Mercury device's configuration pages. For more information, refer to the CCS-UC-1 Product Manual (Doc. 7844).

   Web browser, Crestron Mercury Device, Device menu, Applications

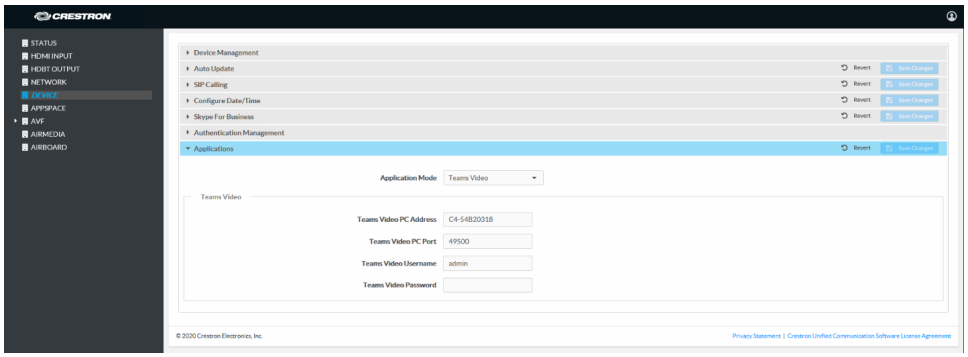

2. Select **Zoom Rooms** from the **Application Mode** drop-down list.

   Web browser, Crestron Mercury Device, Device menu, Applications, Zoom Rooms selected

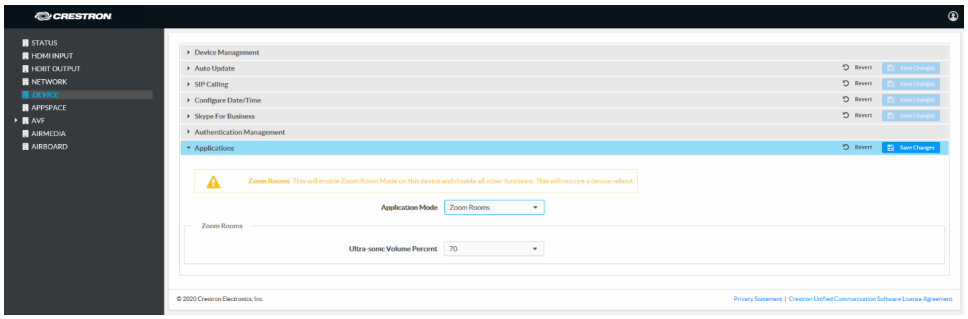

3. Adjust the **Zoom Ultrasonic Volume** setting for use with the Zoom Rooms direct sharing feature. For more information, refer to Direct sharing in Zoom Rooms.
4. Click **Save Changes**. The device will reboot.

- XiO Cloud Service

> **NOTE:** Changes made from the XiO Cloud service will override any settings made from the device.

1. Log in to the XiO Cloud service and select the Crestron Mercury device to switch.
2. Click the **Settings** tab.
3. Click **Applications**.

   XiO Cloud, Crestron Mercury Device, Settings tab, Applications

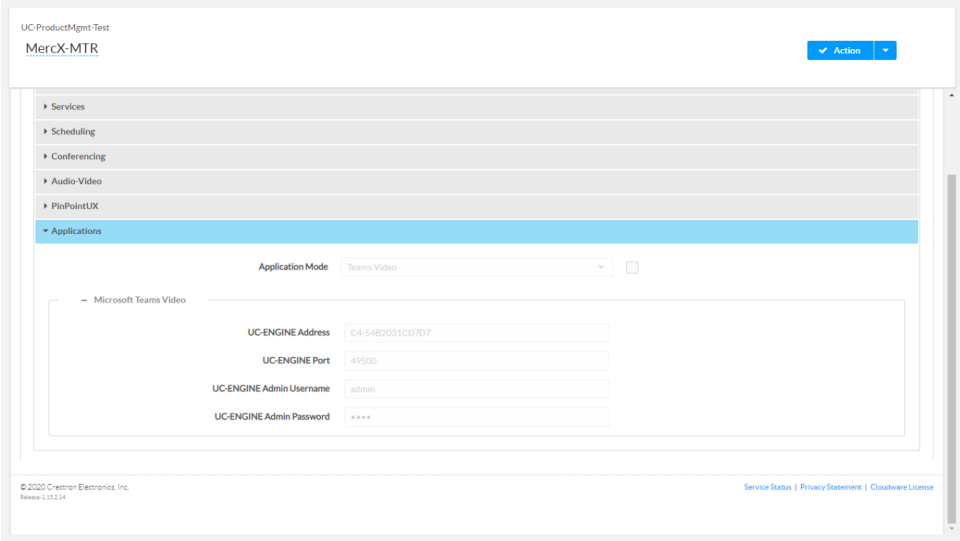

4. Click the checkbox next to **Application Mode** to have the XiO Cloud service manage the device.
5. Select **Zoom Rooms** from the **Application Mode** drop-down list.

   XiO Cloud, Crestron Mercury Device, Settings tab, Applications, Zoom Rooms selected

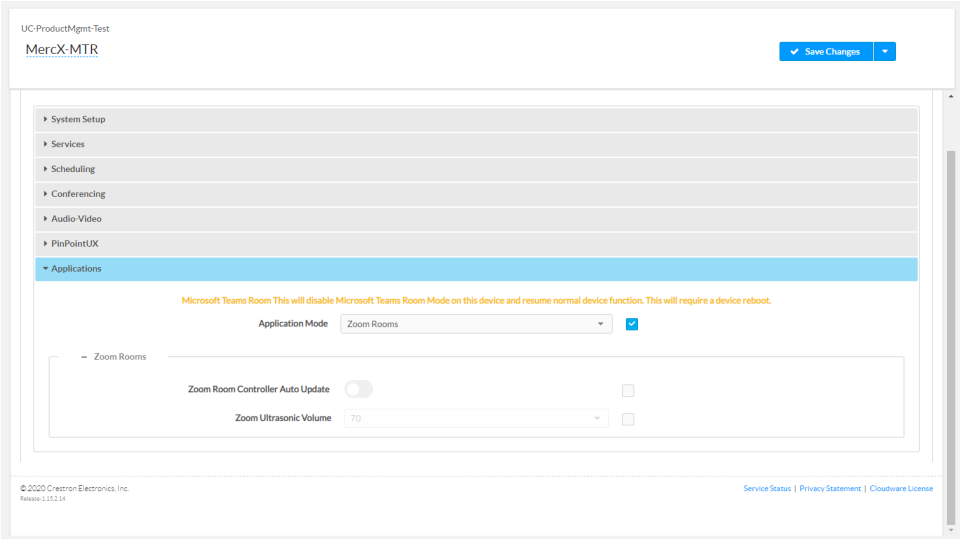

6. Click **Save Changes**. The device will reboot.

7. Set the device's Zoom Room settings.
    - Enable **Zoom Room Controller Auto Update** to have the Crestron Mercury device automatically download updates as they are published.
    - Adjust the **Zoom Ultrasonic Volume** setting for use with the Zoom Rooms direct sharing feature. For more information, refer to Direct sharing in Zoom Rooms.
8. Click **Save Changes**.

Touch Screens

Use one of the following methods to change the touch screen's application mode.

- Web Browser

> **NOTE:** If the touch screen is managed by the XiO Cloud service, any changes made in the web browser will revert to the settings established by the XiO Cloud service.

1. Use a web browser to display the Applications settings of the touch screen's configuration pages. For more information, refer to the TSW-570, TSW-770, and TSW-1070 Product Manual (Doc. 8550) or TS-770 and TS-1070 Product Manual (Doc. 8555).

   Web browser, Touch Screen Device, Settings tab, Applications

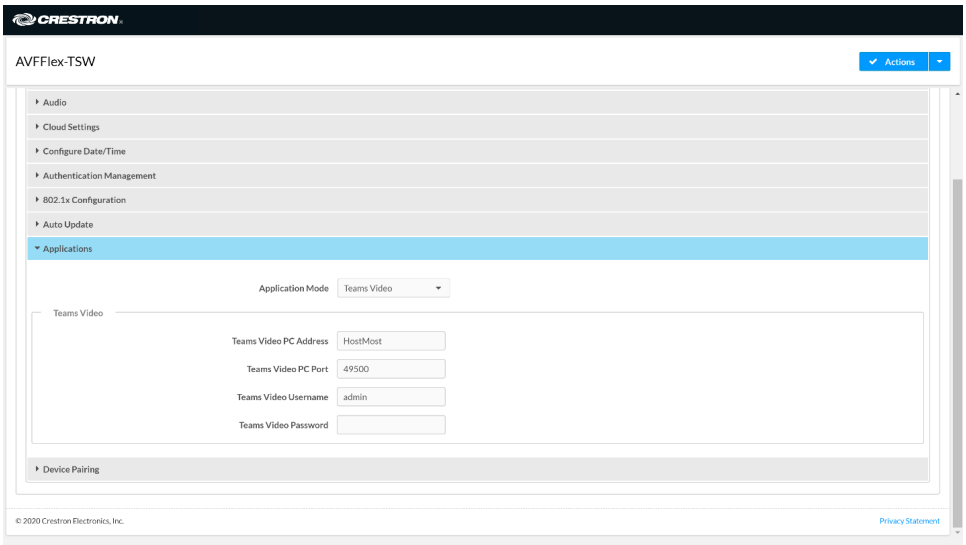

2. Select **Zoom Rooms** from the **Application Mode** drop-down list.

   Web browser, Touch Screen Device, Settings tab, Applications, Zoom Rooms selected

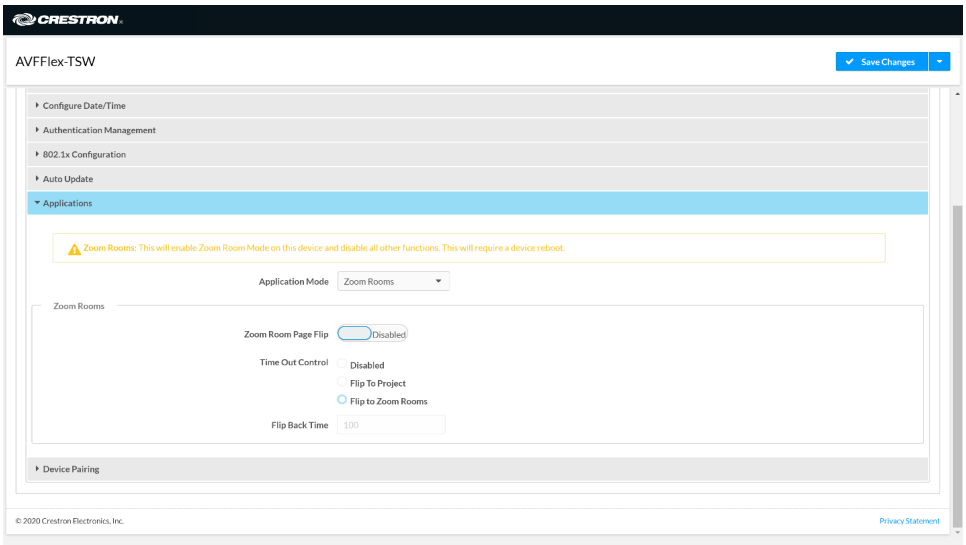

3. If the touch screen is to flip between Zoom Rooms and a custom touch panel project, configure the page flip operation below.
    a. Use a web browser to display the Applications settings of the touch screen's configuration pages.
    b. Set **Zoom Room Page Flip** to **Enabled**.
    c. Set **Time Out Control** to the automatic flip behavior for the Zoom Rooms application.
        - **Disabled:** Automatic flip behavior is disabled.
        - **Flip To Project:** The screen automatically flips to the user project after the Flip Back Time duration elapses. Press the home button (second hard key from top right) on the touch screen to flip back to the Zoom Rooms application.
        - **Flip To Mode:** The screen automatically flips to the Zoom Rooms application after the time-out duration elapses. Press the home button on the touch screen to flip back to the user project.
    d. Set **Flip Back Time** to a time (1 to 100 minutes) before the automatic flip behavior occurs.
4. Click **Save Changes**. The device will reboot.

> **NOTE:** The touch screen automatically updates the Zoom Rooms application weekly. If an update is needed sooner, click **Actions**, and then click **App Upgrade**.

- XiO Cloud Service

> **NOTE:** Changes made from the XiO Cloud service will override any settings made from the device.

1. Log in to the XiO Cloud service and select the touch screen device to switch.
2. Click the **Settings** tab.
3. Click **Applications**.

   XiO Cloud, Touch Screen Device, Settings tab, Applications

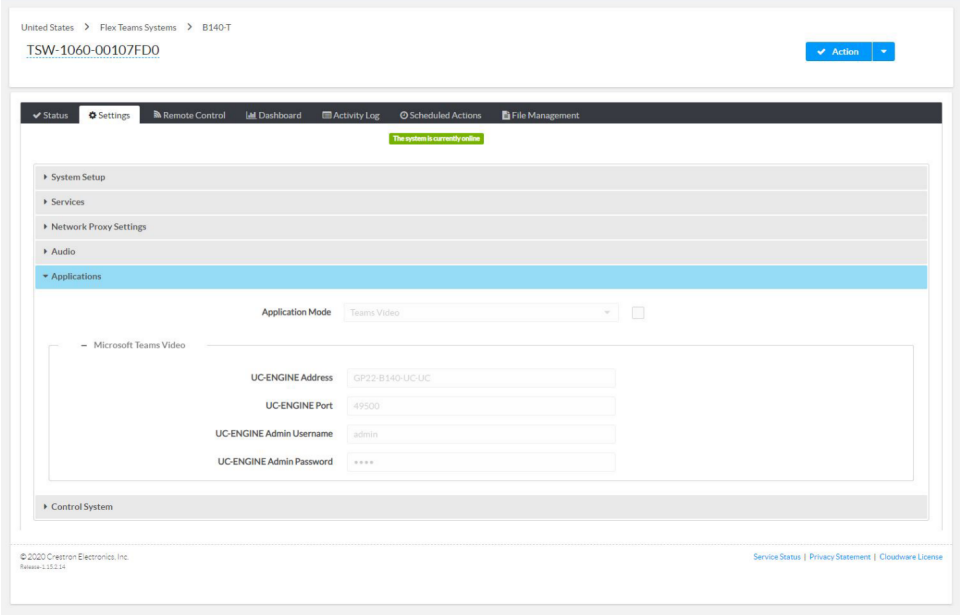

4. Click the checkbox next to **Application Mode** to have the XiO Cloud service manage the device.

5. Select **Zoom Rooms** from the **Application Mode** drop-down list.

   XiO Cloud, Touch Screen Device, Settings tab, Applications, Zoom Rooms selected

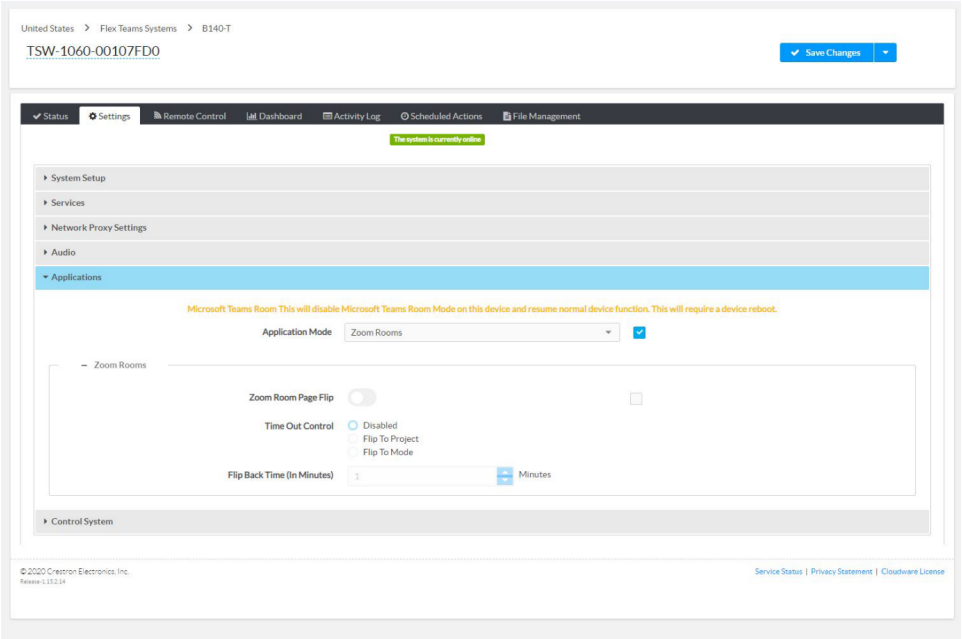

6. If the touch screen is to flip between Zoom Rooms and a custom touch panel project, configure page flip operation.
   a. Set **Zoom Room Page Flip** to **Enabled**.
   b. Set **Time Out Control** to the automatic flip behavior for the Zoom Rooms application.
      - **Disabled:** Automatic flip behavior is disabled.
      - **Flip To Project:** The screen automatically flips to the user project after the Flip Back Time duration elapses. Press the home button (second hard key from top right) on the touch screen to flip back to the Zoom Rooms application.
      - **Flip To Mode:** The screen automatically flips to the Zoom Rooms application after the time-out duration elapses. Press the home button on the touch screen to flip back to the user project.
   c. Set **Flip Back Time** to a time (1 to 100 minutes) before the automatic flip behavior occurs.
7. Click **Save Changes**. The device will reboot.

Operation

For instructions on using a Microsoft Teams Rooms solution, visit Getting Started with a Microsoft Teams Rooms Solution.

Zoom Rooms® Solution

Crestron Flex makes any space a productive Zoom Room. From hotdesking to training rooms, Crestron Flex products deliver the optimum audio and video to each space. With the ease of one-touch join and the ability to effortlessly move a meeting from the desktop to the conference room, Crestron Flex enables teams to work together more efficiently. For more details regarding Crestron Flex and Zoom Rooms collaboration, refer to Crestron Flex + Zoom Rooms.

Select the following sections to learn about the product features, specifications, installation, configuration, and operation for all UC B30/BX30, UC B70, C100/CX100, MM30/MMX30, M50/MX50, and M70/MX70 series Zoom Rooms solutions.

- Features
- Specifications and Dimension Drawings
- Zoom Rooms Deployment and Setup
- Quick Start Guides
- Configuration
- Operation

Features

Refer to the following sections for more information on the features provided by various Zoom Rooms solutions.

UC-B30-Z and UC-B31-Z Series Features

The UC-B30-Z and UC-B31-Z series standard Crestron Flex tabletop front-of-room video conferencing system provides a small room video conference solution for use with Zoom Rooms software. It supports up to three video displays[1] (not included).

UC-B30-Z



UC-B30-Z-WM



UC-B31-Z / UC-B31-Z-INDIA



UC-B31-Z-WM / UC-B31-Z-WM-INDIA



Included Components

	UC-B30-Z	UC-B31-Z(-INDIA)	UC-B30-Z-WM	UC-B31-Z-WM(-INDIA)
UC-SB1-CAM-FLEX	✓	✗	✓	✗
UC-SB-P50 or UC-SB-P50-INDIA	✗	✓	✗	✓
TS-1070-B-S	✓	✓	✗	✗
TSW-1070-B-S	✗	✗	✓	✓
UC-BRKT-200-S-Z-ASSY	✓	✓	✓	✓
PoE Injector	✓	✓	✓	✓
Cables	✓	✓	✓	✓

To view the specifications and dimensions of the included components of the selected kit, refer to Specifications and Dimension Drawings.

Key Features

- Front-of-room video conferencing solution for Zoom Rooms software
- Native Zoom Rooms touch screen UI provides a consistent user experience with simple operation and one-touch meeting joins
- Network management and provisioning and system alerts through the XiO Cloud® service
- Supports up to three video displays (not included)
- Easy to specify and install — no custom design, programming, or software installation required
- Enterprise-grade security — connects and communicates securely over any enterprise or SMB network
- Premium-level support with Crestron Flex Care (optional)

Native Zoom Rooms Software Experience

The conferencing solution features Zoom Rooms conferencing software that enables audio and video connectivity for easy collaboration and content sharing.

Intuitive User Interface

With a large 10.1 in. (257 mm) capacitive touch screen display, the Crestron tabletop or wall mount touch scree provides superior conferencing control in meeting rooms, huddle spaces, and executive offices.

Using the bracket provided with the wall mount touch screen, the touch screen is easily installed over a 2-gang or 3-gang US electrical box, or a 2-gang European or UK electrical box. A security latch option is included to deter unauthorized removal of the touch screen.

Simplified Deployment

The UC Bracket Assembly provides preassembled components on one ready-to-mount bracket to simplify installation. The assembly can be mounted on a wall, or it can be attached to the rear of the display device.

High-Definition Video Conferencing with Impressive Audio

UC-SB1-CAM-FLEX: High-quality speakers, microphone, and digital signal processing deliver exceptional full-duplex speakerphone performance from the Crestron UC video conference soundbar and camera (UC-SB1-CAM-FLEX). The built-in conferencing camera captures the room in HD 1080p video resolution and with an ultra-wide 150° diagonal field of view.

UC-SB-P50 or UC-SB-P50-INDIA: High-quality speakers and microphones deliver exceptional full-duplex performance from the Jabra PanaCast 50 video bar for Crestron Flex systems (UC-SB-P50 or UC-SB-P50-INDIA). Three built-in conferencing cameras capture the room in panoramic 4K resolution with a seamless 180° horizontal field of view.

Visit jabra.com/panacast50 for more information on the Jabra PanaCast 50 video bar for Crestron Flex systems.

Enterprise-Grade Security

Crestron Flex is an enterprise-grade solution that is ideally equipped for mass deployment throughout any sized corporate, university, medical, military, or government facility.

Easy Provisioning and Device Management

The XiO Cloud service is an IoT cloud based provisioning service (available separately) that enables installers and IT managers to deploy and manage thousands of devices easily. The XiO Cloud service allows for system alerts, network management and provisioning, and the pairing of a control device to the system's UC Engine. System updates are controlled by Windows software update.

Visit www.crestron.com/xiocloud for additional information.

Premium-Level Support

Crestron Flex Care is an optional subscription service that can be renewed annually for up to 5 years from the ship date. It includes 24/7 live remote technical support, an extended fiveyear warranty on Crestron® hardware, expedited advance replacements, and a discounted rate for on-site support.

Visit www.crestron.com/flexcare for detailed terms and conditions and additional information.

Deployment Resources

View the Pre-Deployment Checklist on page 379 to help plan your Crestron Flex installation.

Notes:

1. Display must support "Wake on Sync" and "Sleep on No Sync" functionality. Consult the display manufacturer's specifications or internal settings of the specific display.
2. Room control capability (lighting, shades, thermostats, etc.) requires additional equipment and commissioning to be provided by a Crestron authorized integrator and/or programmer. Additional costs may apply.

UC-BX30-Z and UC-BX31-Z Series Features

The UC-BX30-Z and UC-BX31-Z series advanced (with BYOD functionality) Crestron Flex tabletop front-of-room video conferencing system provides a small room video conference solution for use with Microsoft Teams® Rooms software. It supports single or dual video displays[1] (not included).

UC-BX30-Z



UC-BX30-Z-WM



UC-BX31-Z / UC-BX31-Z-INDIA



UC-BX31-Z-WM / UC-BX31-Z-WM-INDIA



Included Components

	UC-BX30-Z	UC-BX31-Z(-INDIA)	UC-BX30-Z-WM	UC-BX31-Z-WM(-INDIA)
UC-SB1-CAM-FLEX	✓	✗	✓	✓
UC-SB-P50 or UC-SB-P50-INDIA	✗	✓	✗	✓
TS-1070-B-S	✓	✓	✗	✗
TSW-1070-B-S	✗	✗	✓	✓
UC-BRKT-260-P-Z-ASSY	✓	✓	✓	✓
UC-PR with Cable Organizer	✓	✓	✓	✓
Cables	✓	✓	✓	✓

To view the specifications and dimensions of the included components of the selected kit, refer to Specifications and Dimension Drawings.

Key Features

- Front-of-room video conferencing solution for Zoom Rooms software
- Native Zoom Rooms touch screen UI provides a consistent user experience with simple operation and one-touch meeting joins
- Network management and provisioning and system alerts through the XiO Cloud® service
- Supports up to three video displays (not included)
- Present, call, conference, and collaborate using your own device's UC conference platform (BYOD) or the native Zoom Rooms platform
- Easy to specify and install — no custom design, programming, or software installation required
- Enterprise-grade security — connects and communicates securely over any enterprise or SMB network
- Premium-level support with Crestron Flex Care (optional)

Native Zoom Rooms Software Experience

The conferencing solution features Zoom Rooms conferencing software that enables audio and video connectivity for easy collaboration and content sharing.

Intuitive User Interface

With a large 10.1 in. (257 mm) capacitive touch screen display, the Crestron tabletop or wall mount touch scree provides superior conferencing control in meeting rooms, huddle spaces, and executive offices.

Using the bracket provided with the wall mount touch screen, the touch screen is easily installed over a 2-gang or 3-gang US electrical box, or a 2-gang European or UK electrical box. A security latch option is included to deter unauthorized removal of the touch screen.

Simplified Deployment

The UC Bracket Assembly provides preassembled components on one ready-to-mount bracket to simplify installation. The assembly can be mounted on a wall, or it can be attached to the rear of the display device.

High-Definition Video Conferencing with Impressive Audio

UC-SB1-CAM-FLEX: High-quality speakers, microphone, and digital signal processing deliver exceptional full-duplex speakerphone performance from the Crestron UC video conference soundbar and camera (UC-SB1-CAM-FLEX). The built-in conferencing camera captures the room in HD 1080p video resolution and with an ultra-wide 150° diagonal field of view.

UC-SB-P50 or UC-SB-P50-INDIA: High-quality speakers and microphones deliver exceptional full-duplex performance from the Jabra PanaCast 50 video bar for Crestron Flex systems (UC-SB-P50 or UC-SB-P50-INDIA). Three built-in conferencing cameras capture the room in panoramic 4K resolution with a seamless 180° horizontal field of view.

Visit jabra.com/panacast50 for more information on the Jabra PanaCast 50 video bar for Crestron Flex systems.

Bring Your Own Device

Conference room visitors can connect their laptop to the Crestron Flex system to use their own UC conference platform. The UC Presentation Transmitter (UC-PR) switches to the connected laptop's UC platform and returns to the native platform when disconnected.[3] For a list of BYOD tested devices on the UC-PR, refer to OLH Article 1000889.

Enterprise-Grade Security

Crestron Flex is an enterprise-grade solution that is ideally equipped for mass deployment throughout any sized corporate, university, medical, military, or government facility.

Easy Provisioning and Device Management

The XiO Cloud service is an IoT cloud based provisioning service (available separately) that enables installers and IT managers to deploy and manage thousands of devices easily. The XiO Cloud service allows for system alerts, network management and provisioning, and the pairing of a control device to the system's UC Engine. System updates are controlled by Windows software update.

Visit www.crestron.com/xiocloud for additional information.

Premium-Level Support

Crestron Flex Care is an optional subscription service that can be renewed annually for up to 5 years from the ship date. It includes 24/7 live remote technical support, an extended fiveyear warranty on Crestron® hardware, expedited advance replacements, and a discounted rate for on-site support.

Visit www.crestron.com/flexcare for detailed terms and conditions and additional information.

Deployment Resources

View the Pre-Deployment Checklist on page 379 to help plan your Crestron Flex installation.

Notes:

1. Display must support "Wake on Sync" and "Sleep on No Sync" functionality. Consult the display manufacturer's specifications or internal settings of the specific display.
2. Room control capability (lighting, shades, thermostats, etc.) requires additional equipment and commissioning to be provided by a Crestron authorized integrator and/or programmer. Additional costs may apply.
3. The UC-PR uses a USB-C 2.0 connection to provide content sharing, BYOD support, and charging for a user's device. Because USB-C supports multiple functions, device compatibility often varies. While some devices can accept power and data through the same USB-C connection, others cannot. The USB-C port on the UC-PR (labelled "USB") uses DisplayPort alternate mode for transporting video signals. Consult the connected device's user manual or manufacturer to ensure that the device supports DisplayPort alternate mode. Some devices that support DisplayPort alternate mode may not support device charging. For a list of tested devices, refer to OLH Article 1000889. USB-C transfer speeds may vary based on the connected device's processing speed, system configuration, the operating environment, and/or other factors. If the user's device does not support USB-C, then a combination of HDMI and USB B may be used for content sharing or BYOD functionality. For details, see Connections (UC-BX30-Z and UC-BX31-Z series).

UC-B70-A-Z and UC-B70-A-Z-I Features

The UC-B70-A-Z and UC-B70-A-Z-I Crestron Flex tabletop conferencing system provides a medium to large room video conference solution for use with Zoom Rooms® software. It simplifies the communications and collaboration needs with fewer components and maximum efficiency. The UC-B70-A-Z(-I) features a 10.1 in. tabletop touch screen, Crestron Videobar 70 with intelligent high-definition video and audio, a PoE injector, and cables. The UC-B70-A-Z(-I) also supports up to three video displays[1] (not included).

The UC-B70-A-Z(-I) conferencing solution delivers a hassle-free setup and installation, better space utilization, a cleaner and visually appealing environment, easy collaboration and content sharing, and scalable deployment.

UC-B70-A-Z(-I)



Included Components

	UC-B70-A-Z	UC-B70-A-Z-I
UC-SB2-CAM-A-Z	✔	✔
TS-1070-B-S-Z-A	✔	✔
PoE Injector	✔	✔
Cables	✔	✔

To view the specifications and dimensions of the included components of the selected kit, refer to Specifications and Dimension Drawings.

Key Features

- Front-of-room video conferencing solution for Zoom Rooms software
- Intelligent high-definition video, immersive high-quality audio, built-in digital signal processer, and Zoom Rooms conferencing software, all in one Android™ OS-based Crestron Videobar 70 enclosure

- Native Zoom Rooms Controller touch screen UI provides a consistent user experience with simple operation and one-touch meeting joins
- Easy to deploy and install — no custom design, programming, or software installation required
- Network management and provisioning and system alerts through the XiO Cloud service
- Enterprise-grade security - connects and communicates securely over any enterprise or SMB (Server Message Block) network
- Supports up to three video displays (not included)

High-Definition Video Conferencing with Impressive Audio

The powerful and elegant all-in-one (AIO) Crestron Videobar 70 provides a convenient and compact conferencing solution for medium to large-sized meeting rooms. It comprises:

- A quad-camera setup that captures the full room in 4K, automatically tracks and frames the presenter or everyone in the room based on its configuration, and enhances the video content using AI.
- 10-watt dual speakers produce full, rich, and natural-sounding audio. Additional digital signal processing with AEC and noise reduction assures optimal sound quality for an immersive experience.
- Integrated 24-microphone array to capture voices throughout the room using adaptive beamforming technology. AI noise cancellation is also provided to ensure crystal-clear communication with exceptional audio fidelity and pickup.
- Android™ OS running on the QCS8250 chipset that ensures a smooth and reliable conferencing experience every time.

Native Zoom Rooms Software Experience

The conferencing solution features Zoom Rooms conferencing software that enables audio and video connectivity for easy collaboration and content sharing.

Android™ OS-Based Conferencing System

As an Android OS-based conferencing system, the conferencing solution provides a consistent, secure Zoom Rooms® experience. The system's tabletop controller and Videobar 70 both run on Android OS to ensure compliance with enterprise requirements.

Intuitive User Interface

With a large 10.1 in. (257 mm) capacitive touch screen display, the Crestron tabletop touch screen provides superior conferencing control in meeting rooms, huddle spaces, and executive offices. The touch screen also offers optional control of room lighting, shades, thermostats, and other equipment.[2]

Simplified Deployment

The AIO Crestron Videobar 70 comes with one ready-to-mount wall bracket allowing the video bar to install cleanly beneath the display – connect the displays and touch screen and mount.

Enterprise-Grade Security

Crestron Flex is an enterprise-grade solution that is ideally equipped for mass deployment throughout any sized corporate, university, medical, military, or government facility.

Easy Provisioning and Device Management

The XiO Cloud service is an IoT cloud based provisioning service (available separately) that enables installers and IT managers to deploy and manage thousands of devices easily. The XiO Cloud service allows for system alerts, network management and provisioning, and the pairing of a control device to the system's UC Engine. System updates are controlled by Windows software update.

Visit www.crestron.com/xiocloud for additional information.

Premium-Level Support

Crestron Flex Care is an optional subscription service that can be renewed annually for up to 5 years from the ship date. It includes 24/7 live remote technical support, an extended fiveyear warranty on Crestron® hardware, expedited advance replacements, and a discounted rate for on-site support.

Visit www.crestron.com/flexcare for detailed terms and conditions and additional information.

Notes:

1. Display must support "Wake on Sync" and "Sleep on No Sync" functionality. Consult the display manufacturer's specifications or internal settings of the specific display.
2. Room control capability (lighting, shades, thermostats, etc.) requires additional equipment and commissioning to be provided by a Crestron authorized integrator and/or programmer. Additional costs may apply.

UC-MM30-Z and UC-MMX30-Z Series Features

The UC-MM30-Z(-I) standard and UC-MMX30-Z(-I) advanced (with BYOD functionality) series Crestron Flex tabletop conferencing system provides a small room video conference solution for use with Zoom Rooms software. It supports single or dual video displays[1] (not included).

UC-MM30-Z / UC-MM30-Z-I	UC-MMX30-Z / UC-MMX30-Z-I
	

Included Components

	UC-MM30-Z(-I)	UC-MMX30-Z(-I)
UC-2	✓	✓
CCS-CAM-USB-F-400	✓	✓
UC-CAM-WMK	✓	✓
UC-BRKT-200-S-Z-ASSY	✓	✗
UC-BRKT-250-P-Z-ASSY or UC-BRKT-260-P-Z-ASSY	✗	✓
UC-PR with Cable Organizer	✓	✓
Cables	✓	✓

To view the specifications and dimensions of the included components of the selected kit, refer to Specifications and Dimension Drawings.

Key Features

- Tabletop video conferencing solution for Zoom Rooms software
- Native Zoom Rooms touch screen UI provides a consistent user experience with simple operation and one-touch meeting joins
- Network management and provisioning and system alerts through the XiO Cloud service
- Supports up to three video displays (not included)
- With MMX30 series solutions — present, call, conference, and collaborate using your own device's UC conference platform (BYOD) or the native Zoom Rooms platform

- Easy to specify and install — no custom design, programming, or software installation required
- Enterprise-grade security — connects and communicates securely over any enterprise or SMB network
- Premium-level support with Crestron Flex Care (optional)

Native Zoom Rooms Software Experience

The conferencing solution features Zoom Rooms conferencing software that enables audio and video connectivity for easy collaboration and content sharing.

Intuitive User Interface with Impressive Audio

With a large 7 in. HD color touch screen and an integrated AEC-enabled USB speakerphone that affords full-duplex wideband audio performance, the mini Crestron Flex Tabletop Conference device provides a superior conferencing and collaboration experience for meeting rooms, huddle spaces, and executive offices.

Simplified Deployment

The UC Bracket Assembly provides preassembled components on one ready-to-mount bracket to simplify installation. The assembly can be mounted on a wall, or it can be attached to the rear of the display device.

High-Definition Video Conferencing

The included collaboration camera (CCS-CAM-USB-F-400) features an ultra wide-angle 150° diagonal field of view to capture an entire conference room in Full HD 1080p video resolution. High precision aspherical optics, 12 MP CMOS sensor, and advanced video processing ensure a clear video image free from light or noise artifacts. Genius Framing digital autozoom detects the people in the room and frames them for an optimal view.

Bring Your Own Device (offered with MMX series solutions)

Conference room visitors can connect their laptop to the Crestron Flex system to use their own UC conference platform. The UC Presentation Transmitter (UC-PR) switches to the connected laptop's UC platform and returns to the native platform when disconnected.[2] For a list of BYOD tested devices on the UC-PR, refer to OLH Article 1000889.

Enterprise-Grade Security

Crestron Flex is an enterprise-grade solution that is ideally equipped for mass deployment throughout any sized corporate, university, medical, military, or government facility.

Easy Provisioning and Device Management

The XiO Cloud service is an IoT cloud based provisioning service (available separately) that enables installers and IT managers to deploy and manage thousands of devices easily. The XiO Cloud service allows for system alerts, network management and provisioning, and the pairing of a control device to the system's UC Engine. System updates are controlled by Windows software update.

Visit www.crestron.com/xiocloud for additional information.

Premium-Level Support

Crestron Flex Care is an optional subscription service that can be renewed annually for up to 5 years from the ship date. It includes 24/7 live remote technical support, an extended fiveyear warranty on Crestron® hardware, expedited advance replacements, and a discounted rate for on-site support.

Visit www.crestron.com/flexcare for detailed terms and conditions and additional information.

Deployment Resources

View the Pre-Deployment Checklist on page 379 to help plan your Crestron Flex installation.

Notes:

1. Display must support "Wake on Sync" and "Sleep on No Sync" functionality. Consult the display manufacturer's specifications or internal settings of the specific display.
2. The UC-PR uses a USB-C 2.0 connection to provide content sharing, BYOD support, and charging for a user's device. Because USB-C supports multiple functions, device compatibility often varies. While some devices can accept power and data through the same USB-C connection, others cannot. The USB-C port on the UC-PR (labelled "USB") uses DisplayPort alternate mode for transporting video signals. Consult the connected device's user manual or manufacturer to ensure that the device supports DisplayPort alternate mode. Some devices that support DisplayPort alternate mode may not support device charging. For a list of tested devices, refer to OLH Article 1000889. USB-C transfer speeds may vary based on the connected device's processing speed, system configuration, the operating environment, and/or other factors. If the user's device does not support USB-C, then a combination of HDMI and USB B may be used for content sharing or BYOD functionality. For details, see Connections (UC-MMX30-Z).

UC-MM30-NC-Z and UC-MMX30-NC-Z Series Features

The UC-MM30-NC-Z(-I) standard and UC-MMX30-NC-Z(-I) advanced (with BYOD functionality) series Crestron Flex tabletop conferencing system provides a small room conference solution for use with Zoom Rooms software. It supports single or dual video displays[1] (not included).

UC-MM30-NC-Z / UC-MM30-NC-Z-I



UC-MMX30-NC-Z / UC-MMX30-NC-Z-I



Included Components

	UC-MM30-NC-Z(-I)	UC-MMX30-NC-Z(-I)
UC-2	✓	✓
UC-BRKT-200-S-Z-ASSY	✓	✗
UC-BRKT-250-P-Z-ASSY or UC-BRKT-260-P-Z-ASSY	✗	✓
UC-PR with Cable Organizer	✓	✓
Cables	✓	✓

To view the specifications and dimensions of the included components of the selected kit, refer to Specifications and Dimension Drawings.

Key Features

- Tabletop conferencing solution for Zoom Rooms software
- Native Zoom Rooms touch screen UI provides a consistent user experience with simple operation and one-touch meeting joins
- Network management and provisioning and system alerts through the XiO Cloud service
- Supports up to three video displays (not included)
- With MMX30 series solutions — present, call, conference, and collaborate using your own device's UC conference platform (BYOD) or the native Zoom Rooms platform
- Easy to specify and install — no custom design, programming, or software installation required
- Enterprise-grade security — connects and communicates securely over any enterprise or SMB network

- Premium-level support with Crestron Flex Care (optional)

Native Zoom Rooms Software Experience

The conferencing solution features Zoom Rooms conferencing software that enables audio and video connectivity for easy collaboration and content sharing.

Intuitive User Interface with Impressive Audio

With a large 7 in. HD color touch screen and an integrated AEC-enabled USB speakerphone that affords full-duplex wideband audio performance, the mini Crestron Flex Tabletop Conference device provides a superior conferencing and collaboration experience for meeting rooms, huddle spaces, and executive offices.

Simplified Deployment

The UC Bracket Assembly provides preassembled components on one ready-to-mount bracket to simplify installation. The assembly can be mounted on a wall, or it can be attached to the rear of the display device.

High-Definition Video Conferencing

High-definition video conferencing is supported by using the following Crestron 1 Beyond cameras: IV-CAMHK-12-SLVR-1B, IV-CAM-P12 and IV-CAM-P20. Zoom Rooms software certified third-party cameras are also compatible with the system.

Bring Your Own Device (offered with MMX series solutions)

Conference room visitors can connect their laptop to the Crestron Flex system to use their own UC conference platform. The UC Presentation Transmitter (UC-PR) switches to the connected laptop's UC platform and returns to the native platform when disconnected. For a list of BYOD tested devices on the UC-PR, refer to OLH Article 1000889.

Enterprise-Grade Security

Crestron Flex is an enterprise-grade solution that is ideally equipped for mass deployment throughout any sized corporate, university, medical, military, or government facility.

Easy Provisioning and Device Management

The XiO Cloud service is an IoT cloud based provisioning service (available separately) that enables installers and IT managers to deploy and manage thousands of devices easily. The XiO Cloud service allows for system alerts, network management and provisioning, and the pairing of a control device to the system's UC Engine. System updates are controlled by Windows software update.

Visit www.crestron.com/xiocloud for additional information.

Premium-Level Support

Crestron Flex Care is an optional subscription service that can be renewed annually for up to 5 years from the ship date. It includes 24/7 live remote technical support, an extended fiveyear warranty on Crestron® hardware, expedited advance replacements, and a discounted rate for on-site support.

Visit www.crestron.com/flexcare for detailed terms and conditions and additional information.

Deployment Resources

View the Pre-Deployment Checklist on page 379 to help plan your Crestron Flex installation.

Notes:

1. Display must support "Wake on Sync" and "Sleep on No Sync" functionality. Consult the display manufacturer's specifications or internal settings of the specific display.
2. The UC-PR uses a USB-C 2.0 connection to provide content sharing, BYOD support, and charging for a user's device. Because USB-C supports multiple functions, device compatibility often varies. While some devices can accept power and data through the same USB-C connection, others cannot. The USB-C port on the UC-PR (labelled "USB") uses DisplayPort alternate mode for transporting video signals. Consult the connected device's user manual or manufacturer to ensure that the device supports DisplayPort alternate mode. Some devices that support DisplayPort alternate mode may not support device charging. For a list of tested devices, refer to OLH Article 1000889. USB-C transfer speeds may vary based on the connected device's processing speed, system configuration, the operating environment, and/or other factors. If the user's device does not support USB-C, then a combination of HDMI and USB B may be used for content sharing or BYOD functionality. For details, see Connections (UC-MMX30-Z).

UC-C100-Z and UC-CX100-Z Series Features

The UC-C100-Z standard and UC-CX100-Z advanced (with BYOD functionality) series Crestron Flex integrator kit provides a customizable video conference solution for use with Zoom Rooms software. It supports up to three video displays[1] (not included).

UC-C100-Z



UC-C100-Z-WM

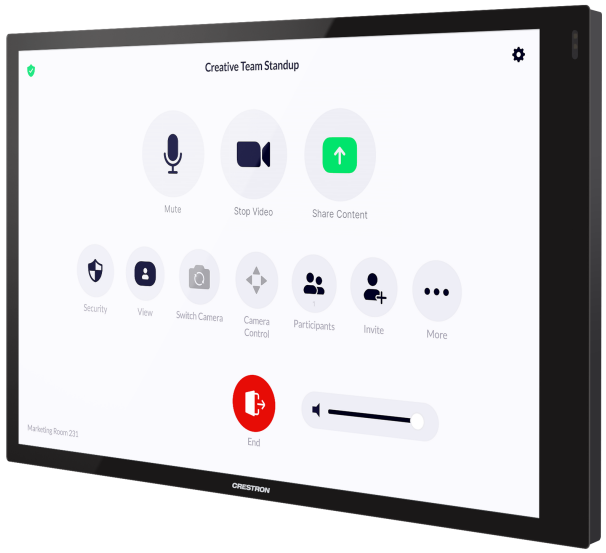

UC-CX100-Z



UC-CX100-Z-WM



Included Components

	UC-C100-Z	UC-C100-Z-WM	UC-CX100-Z	UC-CX100-Z-WM
TS-1070-B-S	✓	✗	✓	✗
TSW-1070-B-S	✗	✓	✗	✓

	UC-C100-Z	UC-C100-Z-WM	UC-CX100-Z	UC-CX100-Z-WM
UC-BRKT-200-S-Z-ASSY	✓	✓	✗	✗
UC-BRKT-260-P-Z-ASSY	✗	✗	✓	✓
UC-PR with Cable Organizer	✗	✗	✓	✓
PoE Injector	✓	✓	✗	✗
Cables	✓	✓	✓	✓

To view the specifications and dimensions of the included components of the selected kit, refer to Specifications and Dimension Drawings.

Key Features

- Conferencing integration solution for Zoom Rooms software
- Native Zoom Rooms touch screen UI provides a consistent user experience with simple operation and one-touch meeting joins
- Network management and provisioning and system alerts through the XiO Cloud service
- Supports up to three video displays (not included)
- With CX100 series solutions — Present, call, conference, and collaborate using your own device's UC conference platform (BYOD) or the native Zoom Rooms platform
- Enterprise-grade security — connects and communicates securely over any enterprise or SMB network
- Premium-level support with Crestron Flex Care (optional)

Native Zoom Rooms Software Experience

The conferencing solution features Zoom Rooms conferencing software that enables audio and video connectivity for easy collaboration and content sharing.

Custom Room Integration

The conferencing solution provides the essential components needed to design a fully custom video conferencing space using your choice of display devices, cameras, speakers, microphones, and other AV equipment. Any Zoom Rooms software certified USB camera such as the Crestron IV-CAMHK-12-SLVR-1B, IV-CAM-P12 and IV-CAM-P20 and a USB audio conferencing interface (or speakerphone) may be used.

Intuitive User Interface

With a large 10.1 in. (257 mm) capacitive touch screen display, the Crestron tabletop or wall mount touch scree provides superior conferencing control in meeting rooms, huddle spaces, and executive offices.

Using the bracket provided with the wall mount touch screen, the touch screen is easily installed over a 2-gang or 3-gang US electrical box, or a 2-gang European or UK electrical box. A security latch option is included to deter unauthorized removal of the touch screen.

Simplified Deployment

The UC Bracket Assembly provides preassembled components on one ready-to-mount bracket to simplify installation. The assembly can be mounted on a wall, or it can be attached to the rear of the display device.

Bring Your Own Device (offered with CX series solutions)

Conference room visitors can connect their laptop to the Crestron Flex system to use their own UC conference platform. The UC Presentation Transmitter (UC-PR) switches to the connected laptop's UC platform and returns to the native platform when disconnected.[3] For a list of BYOD tested devices on the UC-PR, refer to OLH Article 1000889.

Enterprise-Grade Security

Crestron Flex is an enterprise-grade solution that is ideally equipped for mass deployment throughout any sized corporate, university, medical, military, or government facility.

Easy Provisioning and Device Management

The XiO Cloud service is an IoT cloud based provisioning service (available separately) that enables installers and IT managers to deploy and manage thousands of devices easily. The XiO Cloud service allows for system alerts, network management and provisioning, and the pairing of a control device to the system's UC Engine. System updates are controlled by Windows software update.

Visit www.crestron.com/xiocloud for additional information.

Premium-Level Support

Crestron Flex Care is an optional subscription service that can be renewed annually for up to 5 years from the ship date. It includes 24/7 live remote technical support, an extended fiveyear warranty on Crestron® hardware, expedited advance replacements, and a discounted rate for on-site support.

Visit www.crestron.com/flexcare for detailed terms and conditions and additional information.

Deployment Resources

View the Pre-Deployment Checklist on page 379 to help plan your Crestron Flex installation.

Notes:

1. Display must support "Wake on Sync" and "Sleep on No Sync" functionality. Consult the display manufacturer's specifications or internal settings of the specific display.
2. The UC-PR uses a USB-C 2.0 connection to provide content sharing, BYOD support, and charging for a user's device. Because USB-C supports multiple functions, device compatibility often varies. While some devices can accept power and data through the same USB-C connection, others cannot. The USB-C port on the UC-PR (labelled "USB") uses DisplayPort alternate mode for transporting video signals. Consult the connected device's user manual or manufacturer to ensure that the device supports DisplayPort alternate mode. Some devices that support DisplayPort alternate mode may not support device charging. For a list of tested devices, refer to OLH Article 1000889. USB-C transfer speeds may vary based on the connected device's processing speed, system configuration, the operating environment, and/or other factors. If the user's device does not support USB-C, then a combination of HDMI and USB B may be used for content sharing or BYOD functionality. For details, see Connections (UC-CX100-Z).

UC-C100-PRO-Z and UC-CX100-PRO-Z Series Features

The UC-C100-PRO-Z standard and UC-CX100-PRO-Z advanced (with BYOD functionality) series Crestron Flex integrator pro kit provides a customizable video conference solution for use with Zoom Rooms software. It supports up to three video displays[1] (not included).

UC-C100-PRO-Z



UC-C100-PRO-Z-WM

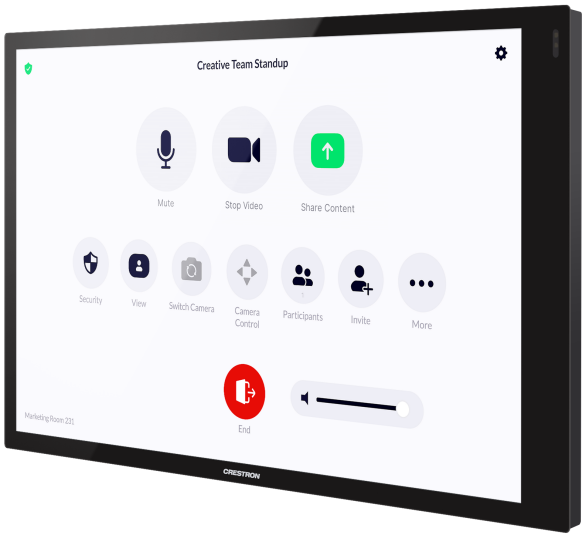

UC-CX100-PRO-Z



UC-CX100-PRO-Z-WM



Included Components

	UC-C100-PRO-Z	UC-C100-PRO-Z-WM	UC-CX100-PRO-Z	UC-CX100-PRO-Z-WM
TS-1070-B-S	✓	✗	✓	✗
TSW-1070-B-S	✗	✓	✗	✓

	UC-C100-PRO-Z	UC-C100-PRO-Z-WM	UC-CX100-PRO-Z	UC-CX100-PRO-Z-WM
UC-BRKT-200-PRO-Z-ASSY	✓	✓	✗	✗
UC-BRKT-260-PRO-Z-ASSY	✗	✗	✓	✓
UC-PR with Cable Organizer	✗	✗	✓	✓
PoE Injector	✓	✓	✗	✗
Cables	✓	✓	✓	✓

To view the specifications and dimensions of the included components of the selected kit, refer to Specifications and Dimension Drawings.

Key Features

- Conferencing integration solution for Zoom Rooms software
- Native Zoom Rooms touch screen UI provides a consistent user experience with simple operation and one-touch meeting joins
- Network management and provisioning and system alerts through the XiO Cloud service
- Supports up to three video displays (not included)
- With CX100 series solutions — Present, call, conference, and collaborate using your own device's UC conference platform (BYOD) or the native Zoom Rooms platform
- Enterprise-grade security — connects and communicates securely over any enterprise or SMB network
- Premium-level support with Crestron Flex Care (optional)

Native Zoom Rooms Software Experience

The conferencing solution features Zoom Rooms conferencing software that enables audio and video connectivity for easy collaboration and content sharing.

Custom Room Integration

The conferencing solution provides the essential components needed to design a fully custom video conferencing space using your choice of display devices, cameras, speakers, microphones, and other AV equipment. Any Zoom Rooms software certified USB camera such as the Crestron IV-CAMHK-12-SLVR-1B, IV-CAM-P12 and IV-CAM-P20 and a USB audio conferencing interface (or speakerphone) may be used.

Intuitive User Interface

With a large 10.1 in. (257 mm) capacitive touch screen display, the Crestron tabletop or wall mount touch scree provides superior conferencing control in meeting rooms, huddle spaces, and executive offices.

Using the bracket provided with the wall mount touch screen, the touch screen is easily installed over a 2-gang or 3-gang US electrical box, or a 2-gang European or UK electrical box. A security latch option is included to deter unauthorized removal of the touch screen.

Simplified Deployment

The UC Bracket Assembly provides preassembled components on one ready-to-mount bracket to simplify installation. The assembly can be mounted on a wall, or it can be attached to the rear of the display device.

Bring Your Own Device (offered with CX series solutions)

Conference room visitors can connect their laptop to the Crestron Flex system to use their own UC conference platform. The UC Presentation Transmitter (UC-PR) switches to the connected laptop's UC platform and returns to the native platform when disconnected. For a list of BYOD tested devices on the UC-PR, refer to OLH Article 1000889.

Enterprise-Grade Security

Crestron Flex is an enterprise-grade solution that is ideally equipped for mass deployment throughout any sized corporate, university, medical, military, or government facility.

Easy Provisioning and Device Management

The XiO Cloud service is an IoT cloud based provisioning service (available separately) that enables installers and IT managers to deploy and manage thousands of devices easily. The XiO Cloud service allows for system alerts, network management and provisioning, and the pairing of a control device to the system's UC Engine. System updates are controlled by Windows software update.

Visit www.crestron.com/xiocloud for additional information.

Premium-Level Support

Crestron Flex Care is an optional subscription service that can be renewed annually for up to 5 years from the ship date. It includes 24/7 live remote technical support, an extended fiveyear warranty on Crestron® hardware, expedited advance replacements, and a discounted rate for on-site support.

Visit www.crestron.com/flexcare for detailed terms and conditions and additional information.

Deployment Resources

View the Pre-Deployment Checklist on page 379 to help plan your Crestron Flex installation.

Notes:

1. Display must support "Wake on Sync" and "Sleep on No Sync" functionality. Consult the display manufacturer's specifications or internal settings of the specific display.
2. The UC-PR uses a USB-C 2.0 connection to provide content sharing, BYOD support, and charging for a user's device. Because USB-C supports multiple functions, device compatibility often varies. While some devices can accept power and data through the same USB-C connection, others cannot. The USB-C port on the UC-PR (labelled "USB") uses DisplayPort alternate mode for transporting video signals. Consult the connected device's user manual or manufacturer to ensure that the device supports DisplayPort alternate mode. Some devices that support DisplayPort alternate mode may not support device charging. For a list of tested devices, refer to OLH Article 1000889. USB-C transfer speeds may vary based on the connected device's processing speed, system configuration, the operating environment, and/or other factors. If the user's device does not support USB-C, then a combination of HDMI and USB B may be used for content sharing or BYOD functionality. For details, see Connections (UC-CX100-Z).

UC-M50-Z and UC-MX50-Z Features

The UC-M50-Z standard and UC-MX50-Z advanced (with BYOD functionality) series Crestron Flex tabletop conferencing system provides a medium room video conference solution for use with Zoom Rooms software. It supports up to three video displays[1] (not included).

UC-M50-Z	UC-MX50-Z
	

Included Components

	UC-M50-Z	UC-MX50-Z
CCS-UC-1	✓	✗
CCS-UC-1-X	✗	✓
CCS-CAM-USB-F-400	✓	✓
UC-CAM-WMK	✓	✓
PW-2420RU	✓	✗
UC-BRKT-200-S-Z-ASSY	✓	✗
UC-BRKT-250-P-Z-ASSY or UC-BRKT-260-P-Z-ASSY	✗	✓
Cables	✓	✓

To view the specifications and dimensions of the included components of the selected kit, refer to Specifications and Dimension Drawings.

Key Features

- Tabletop video conferencing solution for Zoom Rooms environment
- Native Zoom Rooms touch screen UI provides a consistent user experience with simple operation and one-touch meeting joins
- Network management and provisioning and system alerts through the XiO Cloud service
- Supports single or dual video displays (not included)
- With MX50 series solutions — present, call, conference, and collaborate using your own device's UC conference platform (BYOD) or the native Zoom Rooms platform

- Easy to specify and install — no custom design, programming, or software installation required
- Enterprise-grade security — connects and communicates securely over any enterprise or SMB network
- Premium-level support with Crestron Flex Care (optional)

Native Zoom Rooms Software Experience

The conferencing solution features Zoom Rooms conferencing software that enables audio and video connectivity for easy collaboration and content sharing.

Intuitive User Interface with Impressive Audio

With a large 7 in. HD color touch screen and an integrated AEC-enabled USB speakerphone that affords full-duplex wideband audio performance, the Crestron Flex Tabletop Conference device provides a superior conferencing and collaboration experience for meeting rooms, huddle spaces, and executive offices.

Simplified Deployment

The UC Bracket Assembly provides preassembled components on one ready-to-mount bracket to simplify installation. The assembly can be mounted on a wall, or it can be attached to the rear of the display device.

High-Definition Video Conferencing

The included collaboration camera (CCS-CAM-USB-F-400) features an ultra wide-angle 150° diagonal field of view to capture an entire conference room in Full HD 1080p video resolution. High precision aspherical optics, 12 MP CMOS sensor, and advanced video processing ensure a clear video image free from light or noise artifacts. Genius Framing digital autozoom detects the people in the room and frames them for an optimal view.

Bring Your Own Device (offered with MX series solutions)

Conference room visitors can connect their laptop to the Crestron Flex system to use their own UC conference platform. The system's built-in content ingest device switches to the connected laptop's UC platform and returns to the native platform when disconnected.

Enterprise-Grade Security

Crestron Flex is an enterprise-grade solution that is ideally equipped for mass deployment throughout any sized corporate, university, medical, military, or government facility.

Easy Provisioning and Device Management

The XiO Cloud service is an IoT cloud based provisioning service (available separately) that enables installers and IT managers to deploy and manage thousands of devices easily. The XiO Cloud service allows for system alerts, network management and provisioning, and the pairing of a control device to the system's UC Engine. System updates are controlled by Windows software update.

Visit www.crestron.com/xiocloud for additional information.

Premium-Level Support

Crestron Flex Care is an optional subscription service that can be renewed annually for up to 5 years from the ship date. It includes 24/7 live remote technical support, an extended fiveyear warranty on Crestron® hardware, expedited advance replacements, and a discounted rate for on-site support.

Visit www.crestron.com/flexcare for detailed terms and conditions and additional information.

Deployment Resources

View the Pre-Deployment Checklist on page 379 to help plan your Crestron Flex installation.

Note:

1. Display must support "Wake on Sync" and "Sleep on No Sync" functionality. Consult the display manufacturer's specifications or internal settings of the specific display.

UC-M50-NC-Z and UC-MX50-NC-Z Features

The UC-M50-NC-Z standard and UC-MX50-NC-Z advanced (with BYOD functionality) series Crestron Flex tabletop conferencing system provides a medium room conference solution for use with Zoom Rooms software. It supports up to three video displays[1] (not included).

UC-M50-NC-Z	UC-MX50-NC-Z
	

Included Components

	UC-M50-NC-Z	UC-MX50-NC-Z
CCS-UC-1	✓	✗
CCS-UC-1-X	✗	✓
PW-2420RU	✓	✗
UC-BRKT-200-S-Z-ASSY	✓	✗
UC-BRKT-250-P-Z-ASSY or UC-BRKT-260-P-Z-ASSY	✗	✓
Cables	✓	✓

To view the specifications and dimensions of the included components of the selected kit, refer to Specifications and Dimension Drawings.

Key Features

- Tabletop conferencing solution for Zoom Rooms environment
- Native Zoom Rooms touch screen UI provides a consistent user experience with simple operation and one-touch meeting joins
- Network management and provisioning and system alerts through the XiO Cloud service
- Supports single or dual video displays (not included)
- With MX50 series solutions — present, call, conference, and collaborate using your own device's UC conference platform (BYOD) or the native Zoom Rooms platform
- Easy to specify and install — no custom design, programming, or software installation required
- Enterprise-grade security — connects and communicates securely over any enterprise or SMB network
- Premium-level support with Crestron Flex Care (optional)

Native Zoom Rooms Software Experience

The conferencing solution features Zoom Rooms conferencing software that enables audio and video connectivity for easy collaboration and content sharing.

Intuitive User Interface with Impressive Audio

With a large 7 in. HD color touch screen and an integrated AEC-enabled USB speakerphone that affords full-duplex wideband audio performance, the Crestron Flex Tabletop Conference device provides a superior conferencing and collaboration experience for meeting rooms, huddle spaces, and executive offices.

Simplified Deployment

The UC Bracket Assembly provides preassembled components on one ready-to-mount bracket to simplify installation. The assembly can be mounted on a wall, or it can be attached to the rear of the display device.

High-Definition Video Conferencing

High-definition video conferencing is supported by using the following Crestron 1 Beyond cameras: IV-CAMHK-12-SLVR-1B, IV-CAM-P12 and IV-CAM-P20. Zoom Rooms software certified third-party cameras are also compatible with the system.

Bring Your Own Device (offered with MX series solutions)

Conference room visitors can connect their laptop to the Crestron Flex system to use their own UC conference platform. The system's built-in content ingest device switches to the connected laptop's UC platform and returns to the native platform when disconnected.

Enterprise-Grade Security

Crestron Flex is an enterprise-grade solution that is ideally equipped for mass deployment throughout any sized corporate, university, medical, military, or government facility.

Easy Provisioning and Device Management

The XiO Cloud service is an IoT cloud based provisioning service (available separately) that enables installers and IT managers to deploy and manage thousands of devices easily. The XiO Cloud service allows for system alerts, network management and provisioning, and the pairing of a control device to the system's UC Engine. System updates are controlled by Windows software update.

Visit www.crestron.com/xiocloud for additional information.

Premium-Level Support

Crestron Flex Care is an optional subscription service that can be renewed annually for up to 5 years from the ship date. It includes 24/7 live remote technical support, an extended fiveyear warranty on Crestron® hardware, expedited advance replacements, and a discounted rate for on-site support.

Visit www.crestron.com/flexcare for detailed terms and conditions and additional information.

Deployment Resources

View the Pre-Deployment Checklist on page 379 to help plan your Crestron Flex installation.

Note:

1. Display must support "Wake on Sync" and "Sleep on No Sync" functionality. Consult the display manufacturer's specifications or internal settings of the specific display.

UC-M70-Z and UC-MX70-Z Features

The UC-M70-Z standard and UC-MX70-Z advanced (with BYOD functionality) Crestron Flex advanced tabletop conferencing system provides a large room video conference solution for use with Zoom Rooms software. It supports single or dual video displays[1] (not included).

UC-M70-Z



UC-MX70-Z



Included Components

	UC-M70-Z	UC-MX70-Z
CCS-UC-1	✓	✗
CCS-UC-1-X	✗	✓
UC-CAM-L1	✓	✓
CCS-UCA-MIC	✓	✓
PW-2420RU	✓	✗
UC-BRKT-200-S-Z-ASSY	✓	✗
UC-BRKT-250-P-Z-ASSY or UC-BRKT-260-P-Z-ASSY	✗	✓
Cables	✓	✓

To view the specifications and dimensions of the included components of the selected kit, refer to Specifications and Dimension Drawings.

Key Features

- Tabletop video conferencing solution for Zoom Rooms environment
- Native Zoom Rooms touch screen UI provides a consistent user experience with simple operation and one-touch meeting joins
- Network management and provisioning and system alerts through the XiO Cloud service
- Supports single or dual video displays (not included)
- With MX70 series solutions — present, call, conference, and collaborate using your own device's UC conference platform (BYOD) or the native Zoom Rooms platform

- Easy to specify and install — no custom design, programming, or software installation required
- Enterprise-grade security — connects and communicates securely over any enterprise or SMB network
- Premium-level support with Crestron Flex Care (optional)

Native Zoom Rooms Software Experience

The conferencing solution features Zoom Rooms conferencing software that enables audio and video connectivity for easy collaboration and content sharing.

Intuitive User Interface with Impressive Audio

With a large 7 in. HD color touch screen and an integrated AEC-enabled USB speakerphone that affords full-duplex wideband audio performance, the Crestron Flex Tabletop Conference device provides a superior conferencing and collaboration experience for meeting rooms, huddle spaces, and executive offices.

Simplified Deployment

The UC Bracket Assembly provides preassembled components on one ready-to-mount bracket to simplify installation. The assembly can be mounted on a wall, or it can be attached to the rear of the display device.

High-Definition Video Conferencing

The included AI collaboration camera (UC-CAM-L1)[2] features a wide-angle 103° diagonal field of view to capture an entire conference room in Full HD 1080p video resolution. High precision aspherical optics, 20.30 MP CMOS sensor, and advanced video processing ensure a clear video image free from light or noise artifacts. Genius Framing digital autozoom intelligently detects the people in the room and frames them for an optimal view.

Bring Your Own Device (offered with MX series solutions)

Conference room visitors can connect their laptop to the Crestron Flex system to use their own UC conference platform. The system's built-in content ingest device switches to the connected laptop's UC platform and returns to the native platform when disconnected.

Enterprise-Grade Security

Crestron Flex is an enterprise-grade solution that is ideally equipped for mass deployment throughout any sized corporate, university, medical, military, or government facility.

Easy Provisioning and Device Management

The XiO Cloud service is an IoT cloud based provisioning service (available separately) that enables installers and IT managers to deploy and manage thousands of devices easily. The XiO Cloud service allows for system alerts, network management and provisioning, and the pairing of a control device to the system's UC Engine. System updates are controlled by Windows software update.

Visit www.crestron.com/xiocloud for additional information.

Premium-Level Support

Crestron Flex Care is an optional subscription service that can be renewed annually for up to 5 years from the ship date. It includes 24/7 live remote technical support, an extended fiveyear warranty on Crestron® hardware, expedited advance replacements, and a discounted rate for on-site support.

Visit www.crestron.com/flexcare for detailed terms and conditions and additional information.

Deployment Resources

View the Pre-Deployment Checklist on page 379 to help plan your Crestron Flex installation.

Notes:

1. Display must support "Wake on Sync" and "Sleep on No Sync" functionality. Consult the display manufacturer's specifications or internal settings of the specific display.
2. Applicable for UC-MX70-Z: The UC-CAM-L1 with network adapter requires driver installation on the connected laptop. A USB plug-and-play adapter, UC-CAMA-ADPT-ENET-USB, can be purchased separately to avoid driver installation.

UC-M70-NC-Z and UC-MX70-NC-Z Features

The UC-M70-NC-Z standard and UC-MX70-NC-Z advanced (with BYOD functionality) Crestron Flex advanced tabletop conferencing system provides a large room video conference solution for use with Zoom Rooms software. It supports single or dual video displays[1] (not included).

UC-M70-NC-Z	UC-MX70-NC-Z
	

Included Components

	UC-M70-NC-Z	UC-MX70-NC-Z
CCS-UC-1	✓	✗
CCS-UC-1-X	✗	✓
CCS-UCA-MIC	✓	✓
PW-2420RU	✓	✗
UC-BRKT-200-S-Z-ASSY	✓	✗
UC-BRKT-250-P-Z-ASSY or UC-BRKT-260-P-Z-ASSY	✗	✓
Cables	✓	✓

To view the specifications and dimensions of the included components of the selected kit, refer to Specifications and Dimension Drawings.

Key Features

- Supports single or dual video displays (not included)
- With MX70 series solutions — present, call, conference, and collaborate using your own device's UC conference platform (BYOD) or the native Zoom Rooms platform
- Enterprise-grade security — connects and communicates securely over any enterprise or SMB network
- Premium-level support with Crestron Flex Care (optional)

Native Zoom Rooms Software Experience

The conferencing solution features Zoom Rooms conferencing software that enables audio and video connectivity for easy collaboration and content sharing.

Intuitive User Interface with Impressive Audio

With a large 7 in. HD color touch screen and an integrated AEC-enabled USB speakerphone that affords full-duplex wideband audio performance, the Crestron Flex Tabletop Conference device provides a superior conferencing and collaboration experience for meeting rooms, huddle spaces, and executive offices.

Simplified Deployment

The UC Bracket Assembly provides preassembled components on one ready-to-mount bracket to simplify installation. The assembly can be mounted on a wall, or it can be attached to the rear of the display device.

High-Definition Video Conferencing

High-definition video conferencing is supported by using the following Crestron 1 Beyond cameras: IV-CAMHK-12-SLVR-1B, IV-CAM-P12 and IV-CAM-P20. Zoom Rooms software certified third-party cameras are also compatible with the system.

Bring Your Own Device (offered with MX series solutions)

Conference room visitors can connect their laptop to the Crestron Flex system to use their own UC conference platform. The system's built-in content ingest device switches to the connected laptop's UC platform and returns to the native platform when disconnected.

Enterprise-Grade Security

Crestron Flex is an enterprise-grade solution that is ideally equipped for mass deployment throughout any sized corporate, university, medical, military, or government facility.

Easy Provisioning and Device Management

The XiO Cloud service is an IoT cloud based provisioning service (available separately) that enables installers and IT managers to deploy and manage thousands of devices easily. The XiO Cloud service allows for system alerts, network management and provisioning, and the pairing of a control device to the system's UC Engine. System updates are controlled by Windows software update.

Visit www.crestron.com/xiocloud for additional information.

Premium-Level Support

Crestron Flex Care is an optional subscription service that can be renewed annually for up to 5 years from the ship date. It includes 24/7 live remote technical support, an extended fiveyear warranty on Crestron® hardware, expedited advance replacements, and a discounted rate for on-site support.

Visit www.crestron.com/flexcare for detailed terms and conditions and additional information.

Deployment Resources

View the Pre-Deployment Checklist on page 379 to help plan your Crestron Flex installation.

Note:

1. Display must support "Wake on Sync" and "Sleep on No Sync" functionality. Consult the display manufacturer's specifications or internal settings of the specific display.

UC-ENGINE-BRKT-Z-UPGRD and UC-ENGINE-BRKTX-Z-UPGRD Features

The UC-ENGINE-BRKT-Z-UPGRD standard and UC-ENGINE-BRKTX-Z-UPGRD solution provides all of the necessary components to upgrade a deployed Crestron Flex tabletop conference device and camera to a complete video conference system for use with the Zoom Rooms software. It supports single or dual video displays[1].

UC-ENGINE-BRKT-Z-UPGRD



UC-ENGINE-BRKTX-Z-UPGRD



Included Components

	UC-M50-Z-UPGRD	UC-MX50-Z-UPGRD
UC-BRKT-200-S-Z-ASSY	✓	✗
UC-BRKT-250-P-Z-ASSY or UC-BRKT-260-P-Z-ASSY	✗	✓
Cables	✓	✓

To view the specifications and dimensions of the included components of the selected kit, refer to Specifications and Dimension Drawings.

Key Features

- Upgrades a single Crestron Flex tabletop conference device to a complete video conference system
- Native Zoom Rooms software provides a consistent user experience with simple operation and one-touch meeting joins
- Network management and provisioning and system alerts through the XiO Cloud service

- Supports single or dual video displays
- With UC-ENGINE-BRKTX-Z-UPGRD upgrade solution — present, call, conference, and collaborate using your own device's UC conference platform (BYOD) or the native Zoom Rooms platform
- Easy to specify and install — no custom design, programming, or software installation required
- Enterprise-grade security — connects and communicates securely over any enterprise or SMB network
- Premium-level support with Crestron Flex Care (optional)

Native Zoom Rooms Software Experience

The conferencing solution features Zoom Rooms conferencing software that enables audio and video connectivity for easy collaboration and content sharing.

Bring Your Own Device (offered with UC-ENGINE-BRKTX-Z-UPGRD solutions)

Conference room visitors can connect their laptop to the Crestron Flex system to use their own UC conference platform. The system's built-in content ingest device switches to the connected laptop's UC platform and returns to the native platform when disconnected.

Simplified Deployment

The UC Bracket Assembly provides preassembled components on one ready-to-mount bracket to simplify installation. The assembly can be mounted on a wall, or it can be attached to the rear of the display device.

Enterprise-Grade Security

Crestron Flex is an enterprise-grade solution that is ideally equipped for mass deployment throughout any sized corporate, university, medical, military, or government facility.

Easy Provisioning and Device Management

The XiO Cloud service is an IoT cloud based provisioning service (available separately) that enables installers and IT managers to deploy and manage thousands of devices easily. The XiO Cloud service allows for system alerts, network management and provisioning, and the pairing of a control device to the system's UC Engine. System updates are controlled by Windows software update.

Visit www.crestron.com/xiocloud for additional information.

Premium-Level Support

Crestron Flex Care is an optional subscription service that can be renewed annually for up to 5 years from the ship date. It includes 24/7 live remote technical support, an extended fiveyear warranty on Crestron® hardware, expedited advance replacements, and a discounted rate for on-site support.

Visit www.crestron.com/flexcare for detailed terms and conditions and additional information.

Deployment Resources

View the Pre-Deployment Checklist on page 379 to help plan your Crestron Flex installation.

Note:

1. Display must support "Wake on Sync" and "Sleep on No Sync" functionality. Consult the display manufacturer's specifications or internal settings of the specific display.

Specifications and Dimension Drawings

Refer to the following sections for more information regarding the specifications and dimensions of the following devices.

Tabletop Conferencing Device Specifications

Device name: CCS-UC-1 / CCS-UC-1-X

Touch Screen	7 in. (178 mm) diagonal capacitive multi-touch TFT active matrix color LCD, 1280 x 800 pixels
UI	Zoom Rooms UI
Mic Mute Symbol and Light Bar	(2) Capacitive buttons with bi-color LEDs, either button toggles between mute and unmute
AEC	Limes Audio TrueVoice® acoustic echo cancellation, automatic mic mixing, automatic gain control, and dynamic noise reduction, full-duplex IEEE 1329 Type 1 compliant
Speaker	Full range speaker; Amplifier Power: 11 W; 95 dB SPL at 0.5 m maximum output; Frequency Response: 90 Hz to 22 kHz
Microphones	360° quad mic array; Pickup Range (typical): 20 ft (6 m)
Extension Microphones	Supports two mic pods, model CCS-UCA-MIC (sold separately)
Occupancy Sensor	6 ft (1.83 m) PIR range in front of touch screen
Ethernet (CCS-UC-1)	Dual-port 100 Mbps, auto-switching, auto-negotiating, auto-discovery, full/half duplex, DHCP, TCP/IP, UDP/IP, CIP, SSL, TLS, SSH, SFTP (SSH File Transfer Protocol), SRTP, IEEE 802.1X, Active Directory® authentication, LDAP, Kerberos, digest access authentication, password login, HTTPS secure provisioning, XiO Cloud client, primary port is IEEE 802.3at Type 2 PoE+ compliant
Ethernet (CCS-UC-1-TV)	100 Mbps, auto-switching, auto-negotiating, auto-discovery, full/half duplex, DHCP, TCP/IP, UDP/IP, CIP, SSL, TLS, SSH, SFTP (SSH File Transfer Protocol), SRTP, IEEE 802.1X, Active Directory authentication, digest access authentication, password login, XiO Cloud client, Microsoft Intune® client, IEEE 802.3at Type 2 PoE+ compliant
Ethernet (CCS-UC-1-X, CCS-UC-1-X-T-V)	100 Mbps, auto-switching, autonegotiating, autodiscovery, full/half duplex, DHCP, TCP/IP, UDP/IP, CIP, SSL, TLS, SSH, SFTP (SSH File Transfer Protocol), SRTP, IEEE 802.1X, Active Directory authentication, digest access authentication, password login, XiO Cloud service, Microsoft Intune® client
USB	USB 2.0 micro Type B device port, supports UAC for audio interface to UC Engine (cable included)
Power Options (CCS-UC-1)	PoE+: IEEE 802.3at Type 2, Class 4 (25.5 W) PoE+ Powered Device **NOTE:** If the additional mic pod (CCS-UCA-MIC) is used, PoE+ cannot be used to power the device. 24VDC: 24VDC via external 100-240VAC, 50/60 Hz power pack, model PW-2420RU
Power (CCS-UC-1-X)	24VDC via external 100-240VAC, 50/60 Hz power pack, model PW-2420RU **NOTE:** The CCS-UC-1-X cannot be powered by Power over Ethernet or PoE+.
Dimensions	Height: 4.11 in. (104 mm) Width: 8.92 in. (227 mm) Depth: 12.74 in. (324 mm)

Weight	5.5 lb (2.5 kg)

Tabletop Conferencing Device Dimension Drawing

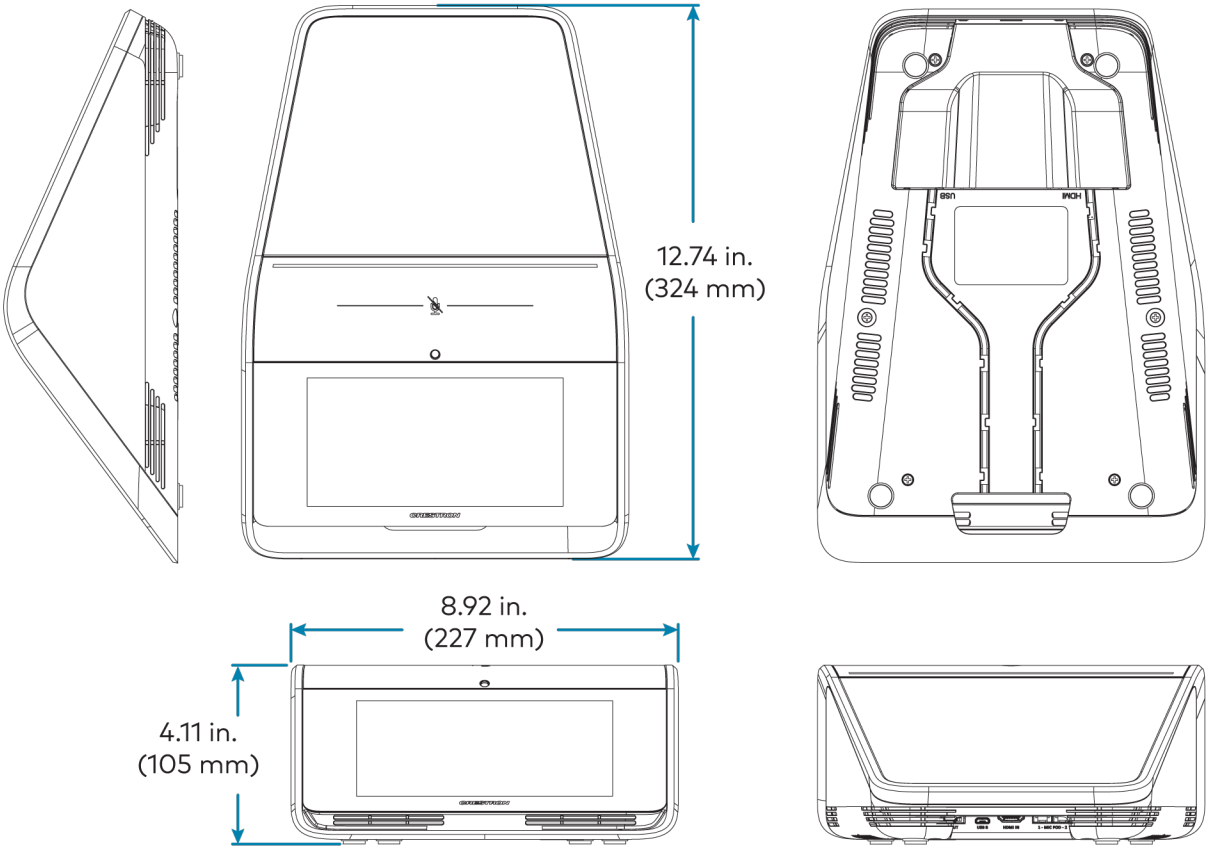

Mini Tabletop Conferencing Device Specifications

Device name: UC-2-Z

Touch Screen	7 in. (178 mm) diagonal capacitive multi-touch TFT active matrix color LCD, 1280 x 800 pixels
UI	Zoom Rooms UI
Mic Mute Symbol and Light Bar	(4) Capacitive buttons with bi-color LEDs, toggles between mute and unmute
AEC	Automatic gain control, dynamic noise reduction, acoustic echo cancellation, full-duplex IEEE 1329 Type 1 compliant
Speaker	Full range speaker; Amplifier Power: 7 W (rated power); Output Volume: 83 ±3 dBA @1m 1 kHz; Frequency Response: 100 Hz - 20 kHz
Microphones	(4) Built-in omnidirectional, digital MEMS microphones with 360° audio pickup; Maximum pickup range: 10 ft (3 m) typical
Occupancy Sensor	Approx. 10 ft (3 m) PIR range in front of touch screen
Ethernet	100 Mbps, auto-switching, auto-negotiating, auto-discovery, full/half duplex, DHCP, TCP/IP, UDP/IP, CIP, SSL, TLS, SSH, SFTP (SSH File Transfer Protocol), SRTP, IEEE 802.1X, Active Directory® authentication, digest access authentication, password login, XiO Cloud client, Microsoft Intune® client, IEEE 802.3at Type 2 PoE+ compliant
USB	USB 2.0 micro Type B device port, supports UAC for audio interface to UC Engine (cable included)
Power	IEEE 802.3af Class 3 and 802.3at Class 4 PoE+ powered device; PoE+ injector included
Dimensions	Height: 3.02 in. (77 mm) Width: 7.17 in. (182 mm) Depth: 9.61 in. (244 mm)
Weight	2.1 lb (0.96 kg)

Mini Tabletop Conferencing Device Dimension Drawing

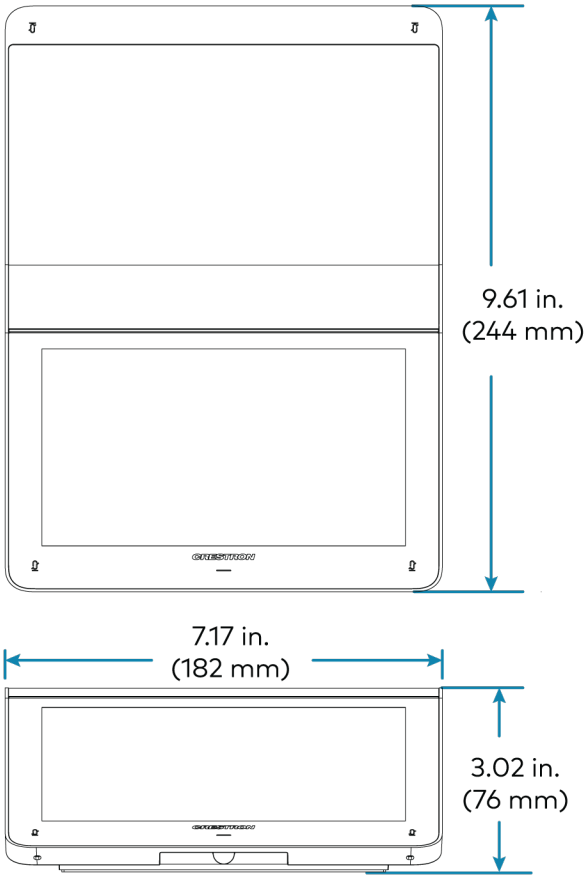

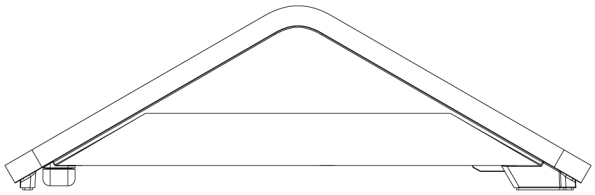

Tabletop and Wall Mount Touch Screen Specifications

Device name: TS-1070-B-S / TSW-1070-B-S

Touch Screen	10.1 in. (257 mm) diagonal capacitive multi-touch TFT active matrix color LCD, 1920 x 1200 pixels
UI	Zoom Rooms UI plus optional Crestron Smart Graphics® room control UI[2]
Ethernet	100/1000 Mbps, auto switching, auto negotiating, auto discovery, full/half duplex, TCP/IP, UDP/IP, CIP, DHCP, SSL, TLS, SSH, SFTP (SSH File Transfer Protocol), IEEE 802.1X, SNMP, IPv4 or IPv6, Active Directory® service authentication, HTTPS web browser setup, XiO Cloud® client, IEEE 802.3at compliant
Power over Ethernet	IEEE 802.3at Type 2 compliant PoE+ PD (Powered Device); Normally requests 15 W from an 802.3at Type 2 PSE with LLDP advanced power management; With room scheduling and USB enabled, requests 18 W from an 802.3at Type 2 PSE with LLDP; Requests 30 W (PoE+ Class 4) from an 802.3at Type 2 PSE without LLDP; Requests 15.4 W (PoE Class 0) from an 802.3af (or 802.3at Type 1) PSE
Power	Powered via PoE passthrough on the UC-PR
Construction	Plastic, smooth black finish, edge-to-edge glass with black surround
Dimensions (TS-1070)	Height: 5.29 in. (134 mm) Width: 9.63 in. (245 mm) Depth: 4.67 in. (119 mm)
Dimensions (TSW-1070)	Height: 5.87 in. (149 mm) Width: 9.46 in. (240 mm) Depth: 2.01 in. (51 mm) Dimensions do not include mounting bracket or add-on accessories
Weight (TS-1070)	2.44 lb (1105 g)
Weight (TSW-1070)	1.61 lb (730 g)

Tabletop Touch Screen Dimension Drawing

TS-1070-B-S

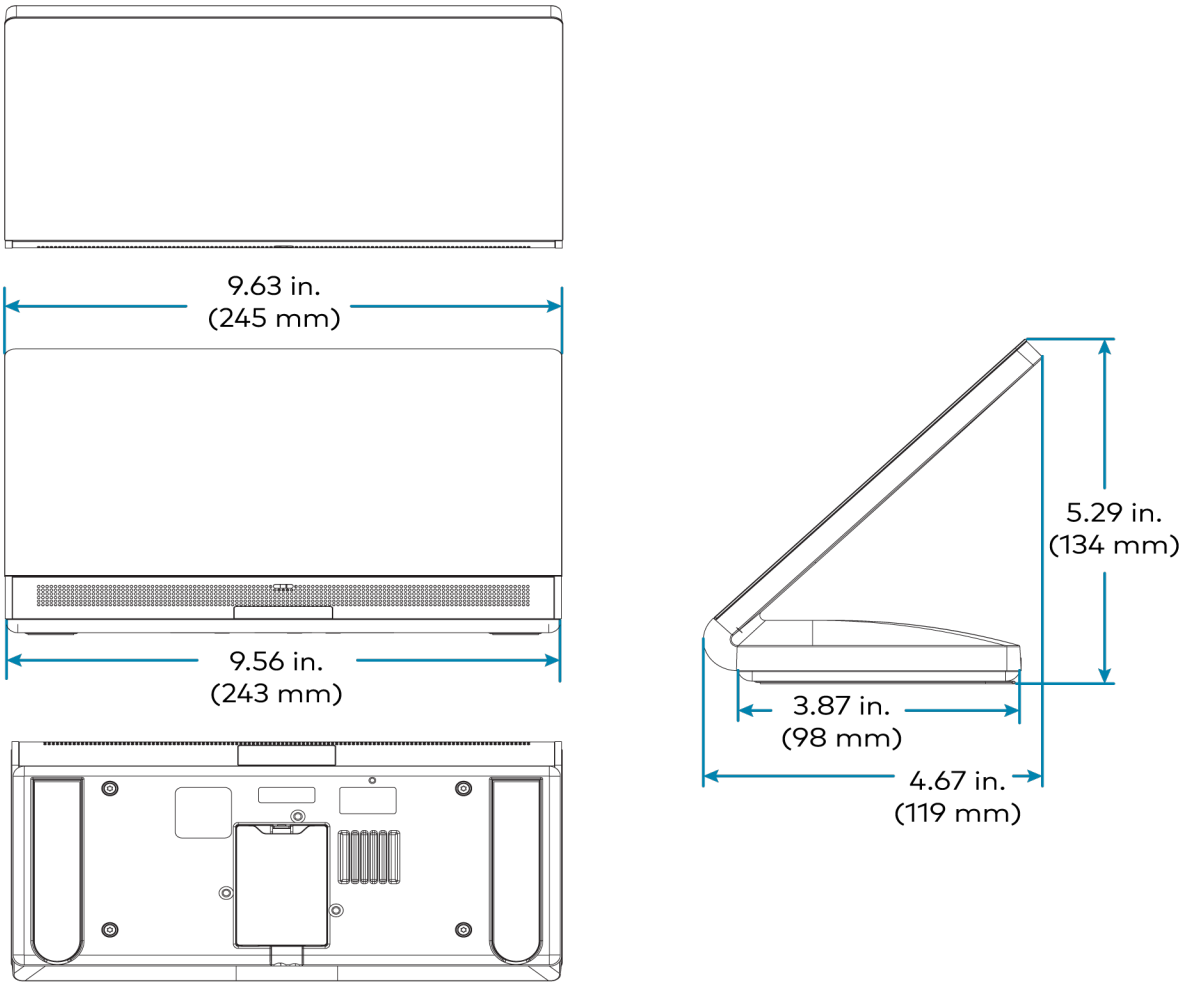

Wall Mount Touch Screen Dimension Drawing

TSW-1070-B-S

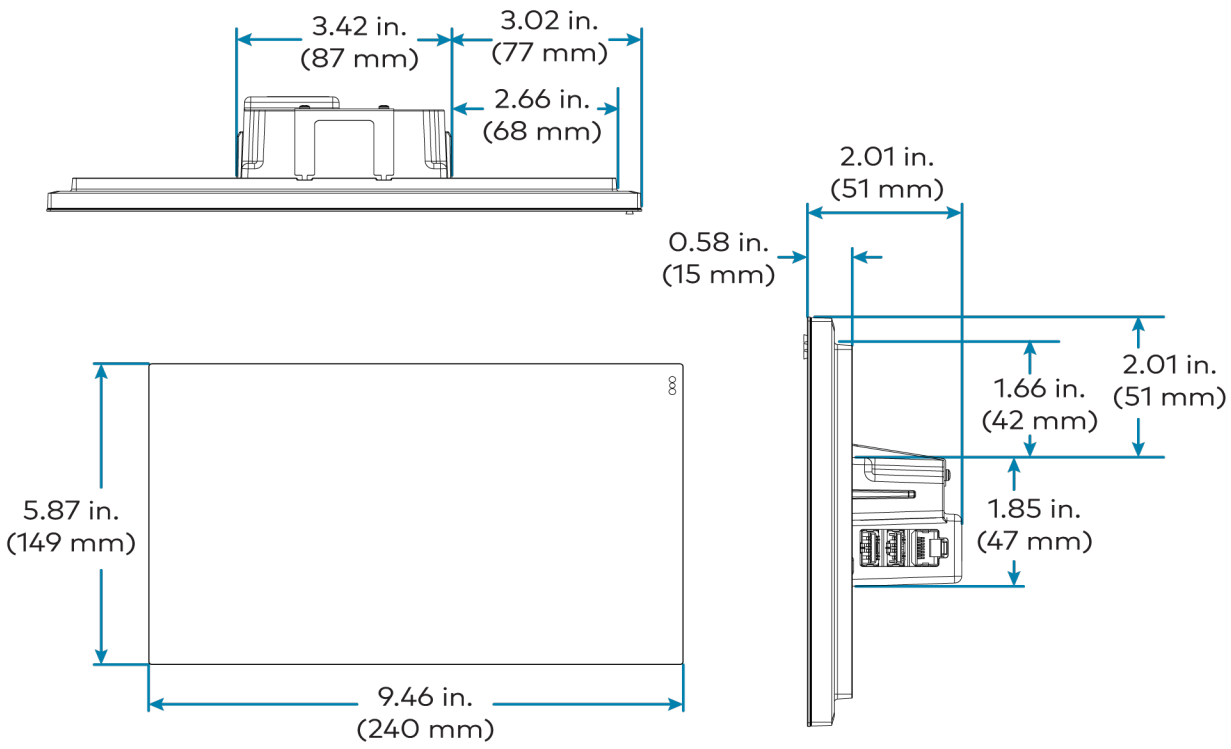

Wall Mount Touch Screen Bracket Dimension Drawing

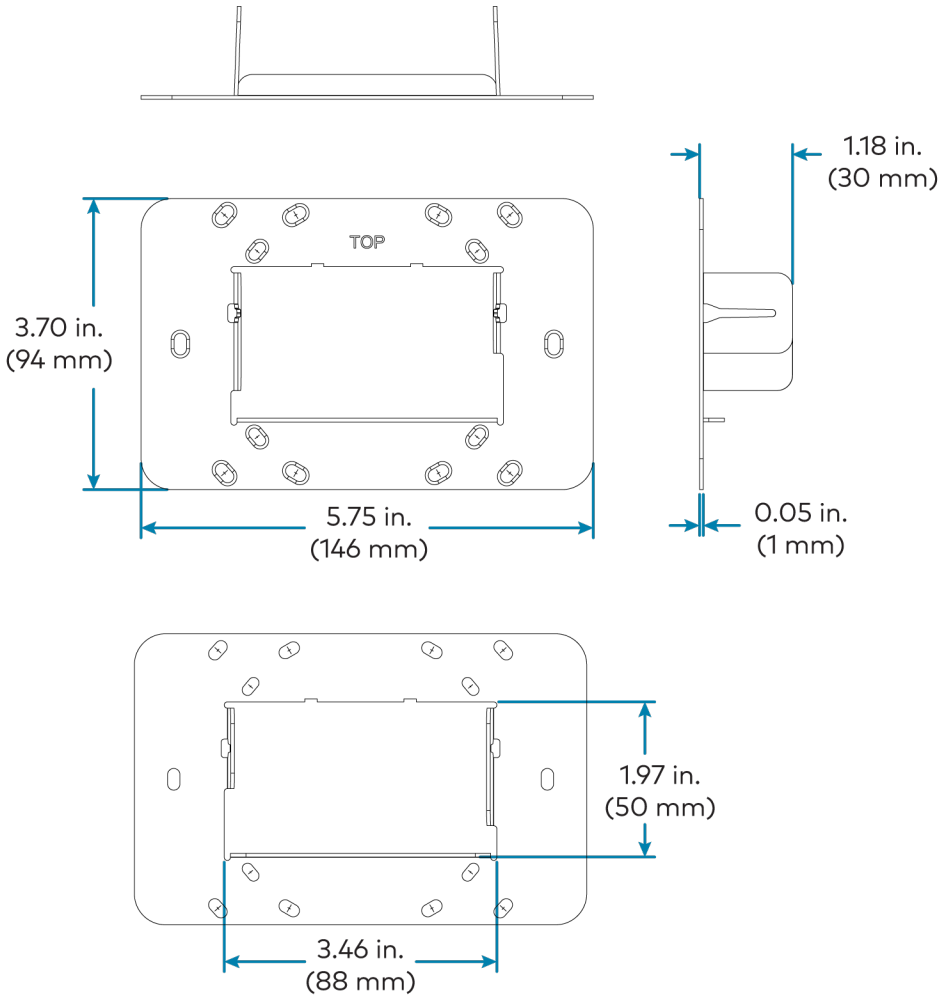

Crestron Videobar 70 Specifications

Speakers	Dual 10-watt speakers, stereo;
Microphone	24 mic linear array

> **NOTE:** Microphone pickup range may vary in rooms with highly reflective infrastructure (e.g., glass walls, metal furniture, open ceilings, etc.) or above average ambient noise.

Audio DSP	Acoustic echo cancellation, dereverberation, automatic gain control, dynamic noise suppression, adaptive beamforming, speaker volume control, speaker EQ and limiting (fixed);
Quad Camera Configuration	(1) Main camera; (1) Left, (1) center, and (1) right sub cameras with 14° overlap
Main Camera Optics	Main camera 20 Megapixels 1 in. sensor
Camera Field of View	Main Camera: 84.3° horizontal, 53.8° vertical; Left, center and right sub cameras: 41° horizontal, 23° vertical
Camera Resolution	Main Camera: 5472 x 3078 pixels; Left, center and right sub camera: 3840 x 2160 pixels
Autozoom	7.5x digital zoom
Camera Shutter	Mechanical, electronically controlled
Operating System	Android OS running on the QCS8250 chipset
Memory	LPDDR5 12GB; UFS 128GB
Connectivity	100/1000 Mbps Ethernet connectivity
Wi-Fi® Connectivity	Dual Band Simultaneous Wi-Fi 6 2x2 80 MHz
Bluetooth® Connectivity	Bluetooth 5.2 (for future use)
UC Client	Zoom Rooms software
Management Client	XiO Cloud Service
Content Ingest	HDMI input on Crestron Videobar 70 or direct sharing
Display Output	Up to two displays support
Display Output Resolution	(2) 4K
Video Input Signal Types	HDMI, 1080p 30
Video Output Signal Types	HDMI, 4K30
Video Content Protection	HDCP 1.4 and HDCP 2.2
Audio Input Signal Types	HDMI: Two-channel LPCM
Connectors	HDMI port: (2) HDMI In (Input 2 reserved for future use), (3) HDMI Out (Output 3 reserved for future use); 3.5 mm Line in / Line out: (1) Audio In, (1) Audio Out (reserved for future use); LAN: (2) 8-pin RJ-45 connector; USB A: (2) USB 3.0 Type A connector (reserved for future use); USB C: (2) USB 3.1 Type-C connector (reserved for future use)
Input Power	19VDC via external 100-240VAC, 50/60 Hz power pack (included)
Temperature	32° to 104°F (0° to 40°C)

Enclosure	Plastic, smooth black finish; Speaker and camera housing, rear air vents, integrated mounting bracket
LED Indicators	Green indicates microphones are unmuted; Red indicates microphones are muted
Mounting	Wall mount using integrated mounting bracket, optional desktop stand and display bracket accessories
Dimensions	Height: 4.33 in. (110 mm); 6.38 in. (162 mm) with bracket; Length: 38.58 in. (980 mm) Depth: 3.77 in. (96 mm); 4 in. (101 mm) with bracket
Weight	13.2 lb (6 kg)

Crestron Videobar 70 Dimension Drawing

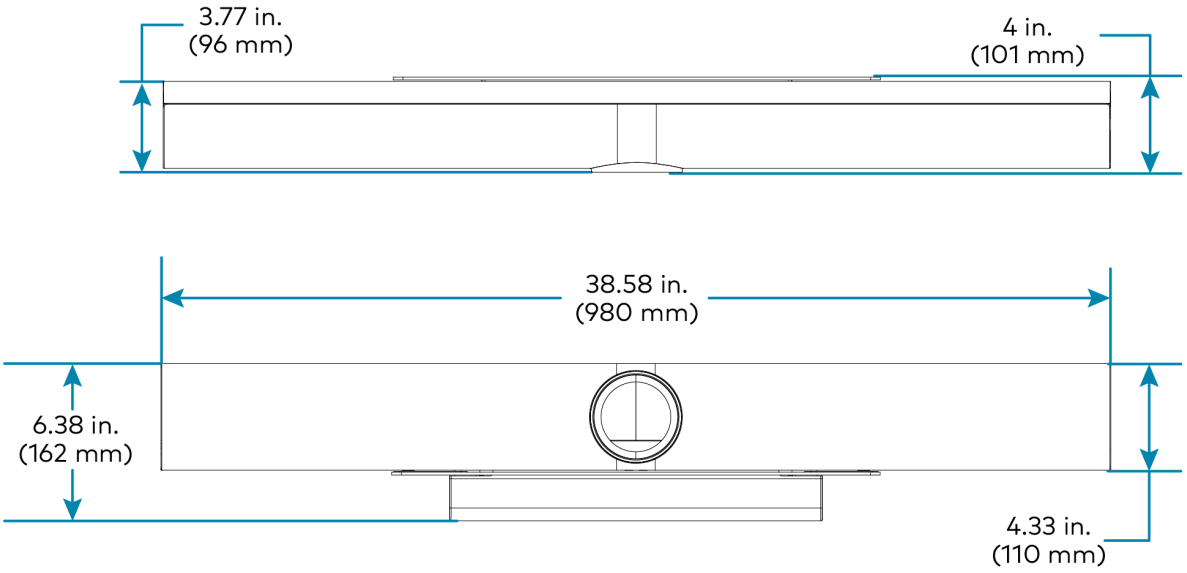

Smart Soundbar and Camera Specifications

UC-SB1-CAM-FLEX

Speakers	Stereo 2-way, 20 W per channel; 3 in. (76 mm) woofers; 3 x 4-3/8 in. (76 x 112 mm) passive radiators; 1 in. (25 mm) dome tweeters; 80 Hz to 20 kHz (±3 dB) frequency response; 91 dB SPL @ 1 m output level (both channels driven at full power)
Microphone	Linear quad-element far-field adaptive beamforming microphone array; 15 ft (4.6 m) pickup range, 180° horizontal and 180° vertical pickup angle; 20 Hz to 8 kHz frequency response

NOTE: Microphone pickup range may vary in rooms with highly reflective infrastructure (e.g., glass walls, metal furniture, open ceilings, etc.) or above average ambient noise.

Audio DSP	Acoustic echo cancellation, dereverberation, automatic gain control, dynamic noise suppression, adaptive beamforming, speaker volume control, speaker EQ and limiting (fixed); Full-duplex IEEE 1329 Type 1 compliant
Camera Optics	12 Megapixel 1/2.3 CMOS sensor, ultra wide angle six element aspherical glass lens, f/2.8 aperture
Camera Field of View	150° diagonal, 120° horizontal, 90° vertical
Autozoom	Genius Framing automatic lossless digital zoom intelligently frames around people in the room
Camera Noise Reduction	3D noise reduction, bias compensating spatio-temporal filtering, wide area chroma filtering, flicker elimination
Camera Scaling	Real-time scaling, dewarping, and perspective correction
Camera Resolution	HD 1080p @ 30 fps
Analog Audio Input	2-Channel stereo via 3.5 mm TRS mini-phone jack, fixed level (bypasses DSP), 1 Vrms maximum per channel for full rated output, for in-room amplification of an external audio source
Analog Audio Output	2-Channel stereo via 3.5 mm TRS mini-phone jack, fixed level, 1 Vrms maximum, feeds amplified audio content to an assistive listening system
Status Bar	Multi-segment RGBY LED zero-center mutually-diverging linear bargraph
Main Power	24VDC via external 100-240VAC, 50/60 Hz power pack, model PW-2420RU (included)
Enclosure	Lightly textured gunmetal black finish, plastic housing, perforated stainless steel grilles, die-cast aluminum rear cover, integral steel hinged mounting bracket
Mounting	Freestanding or surface wall mount at ear/face level (adhesive feet included, mounting bracket attached)
Dimensions	Height: 4.57 in. (116 mm), 4.64 in. (118 mm) with feet Width: 43.60 in. (1107 mm) Depth: 3.90 in. (99 mm)
Weight	13.56 lb (6.2 kg)

UC-SB1-CAM-FLEX Dimension Drawing

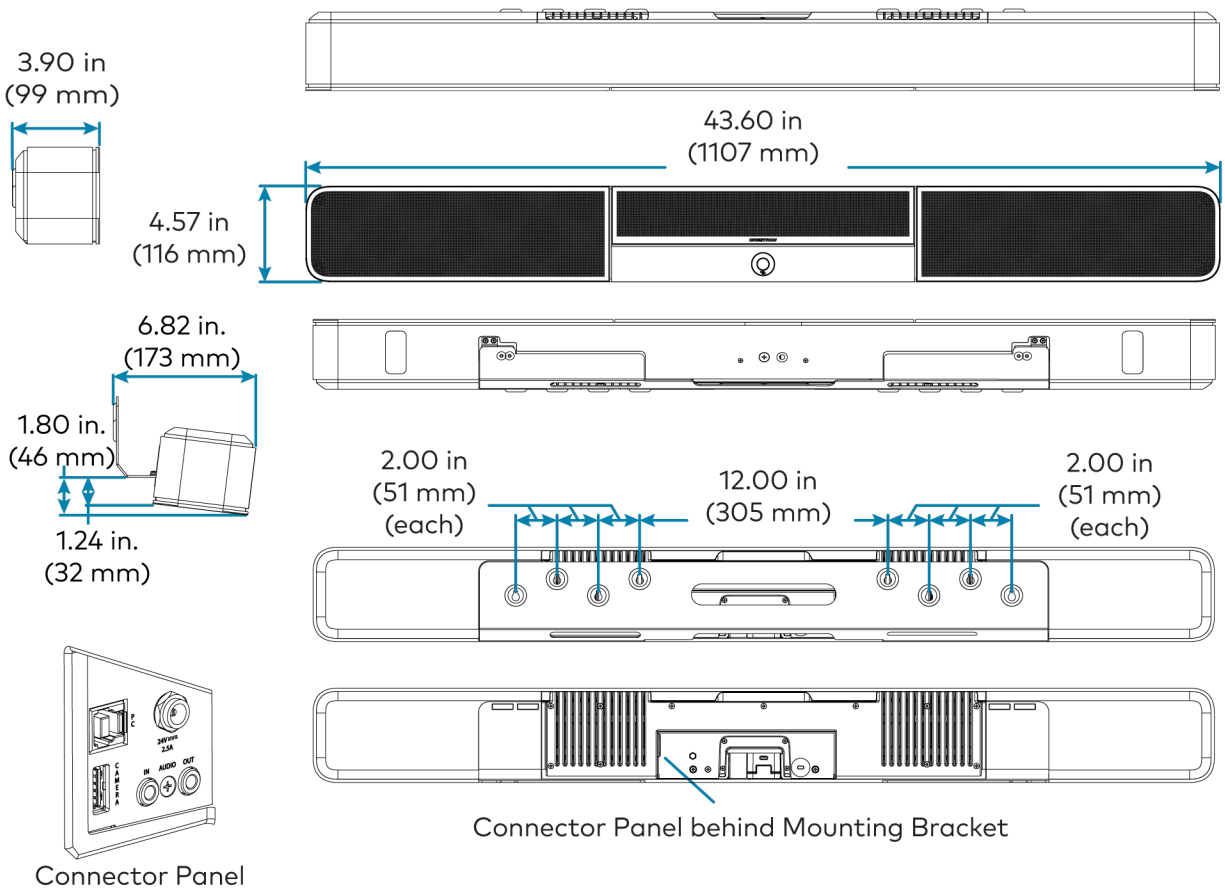

UC-SB-P50 or UC-SB-P50-INDIA

Speakers	(4) speakers, stereo; 2 in. (50 mm) woofers; 2 x 3/4 in. (50 x 20 mm) tweeters; 80 Hz to 20 kHz frequency response; Automatic speaker detection
Microphone	(8) microphone beamforming array; -37 dBFS microphone sensitivity; 100 Hz to 8 kHz microphone frequency range; Suitable for rooms up to 15 x 15 ft (4.5 x 4.5 m)

NOTE: Microphone pickup range may vary in rooms with highly reflective infrastructure (e.g., glass walls, metal furniture, open ceilings, etc.) or above average ambient noise.

Camera Optics	(3) cameras; 13 Megapixels
Camera Field of View	180° horizontal, 54° vertical
Autozoom	Automatic digital zoom dynamically frames people within 11 ft (3.5 m)
Camera Resolution	3840 x 1080 @ 30 fps
Power	From external power pack; Input: 100-240VAC, 50/60 Hz; Output: 5A @ 12V
Enclosure	Black speaker and camera housing, rear air vents, integrated adjustable mounting bracket
Mounting	Wall mount using integrated mounting bracket; Optional table mount or VESA® compliant screen mount (both sold separately)
Dimensions	Height: 3.1 in. (90 mm) Width: 25.60 in. (650 mm) Depth: 4.90 in. (125 mm)
Weight	4.85 lb (2.2 kg)

For more information on the Jabra PanaCast 50 video bar for Crestron Flex systems, refer to jabra.com/panacast50.

Camera Specifications

CCS-CAM-USB-F-400

Image Sensor	12 Megapixel 1/2.3 CMOS sensor
Lens	High precision, ultra wide angle, six element aspherical glass lens
Field of View	150° diagonal, 120° horizontal, 90° vertical
Aperture	f/2.8
Autozoom	Genius Framing automatic lossless digital zoom intelligently frames around people in the room
Connectivity	Plug-and-play USB 3.1
Resolution/FPS	HD 1080p @ 30 fps
Dimensions	Height: 1.40 in. (36 mm) Width: 1.60 in. (41 mm) Depth: 2.82 in. (72 mm)
Weight	4.2 oz (120 g)

UC-CAM-L1

Image Sensor	20.30 Megapixels 1 in. CMOS Sensor
Lens	High precision, wide angle, aspherical glass lens
Field of View	103° diagonal, 92° horizontal, 65° vertical
Aperture	f/2.9
Autozoom	Genius Framing automatic lossless digital zoom intelligently frames around people in the room
Connectivity	USB 3.0 port (via USB to PoE Adapter)
Power	5VDC power adapter
Resolution/FPS	HD 1080p @ 30 fps
Dimensions	Height: 2.1 in. (53 mm) Width: 4.8 in. (122 mm) Depth: 3.5 in. (89 mm)
Weight	1.3 lb (0.6 kg)

UC Engine Bracket Assembly Specifications

Device name: UC-BRKT-200-S-Z-ASSY / UC-BRKT-250-P-Z-ASSY / UC-BRKT-260-P-Z-ASSY / UC-BRKT-PRO-Z-ASSY / UC-BRKT-260-PRO-Z-ASSY

UC Engine	Mini PC, Intel Core® processor with Windows® 11 IoT Edition OS and 100/1000 Mbps Ethernet connectivity
UC Engine Pro (UC-BRKT-PRO-Z-ASSY, UC-BRKT-260-PRO-Z-ASSY)	Mini PC, Intel Core® i7 processor, 12th Generation with Windows® 11 IoT Edition OS and 100/1000 Mbps Ethernet connectivity
UC Client	Zoom Rooms software
Management Client	XiO Cloud Service
Content Ingest	HDMI input via HDMI to USB 3.0 converter (UC-BRKT-200-S-Z-ASSY/UC-BRKT-PRO-Z-ASSY)
Content Ingest	HDMI input via CAT5 to USB 3.0 converter (UC-BRKT-250-P-Z-ASSY or UC-BRKT-260-P-Z-ASSY/UC-BRKT-260-PRO-Z-ASSY)

NOTE: Use only DigitalMedia™ Ultra cable between the conference and content ingest devices (UC-BRKT-250-P-T-ASSY). The maximum supported cable length is 300 ft.

Display Output	Up to three displays support
Display Output Resolution	1080p
Power (UC-BRKT-200-S-Z-ASSY/UC-BRKT-PRO-Z-ASSY)	130 W via external 100-240VAC, 50/60 Hz adapter (included)
Power (UC-BRKT-250-P-Z-ASSY / UC-BRKT-260-P-Z-ASSY / UC-BRKT-260-PRO-Z-ASSY)	UC Engine: 100-240VAC, 50/60 Hz adapter (included); Content ingest device: 24VDC via external 100-240VAC, 50/60 Hz power pack (included)
Construction	Metal mounting bracket, black, preassembled with UC Engine and content ingest device
Mounting	Surface wall mount behind the display device, or attach to the rear of the display device via the bolts attaching the display to a VESA® compliant display mount; Bracket includes mounting holes on both side edges, spaced 100, 200, and 300 mm vertically, to allow for attachment to either side of the display mounting plate
Dimensions	Maximum Height: 15.00 in. (381 mm) Maximum Width: 14.50 in. (368 mm) Maximum Depth: 1.93 in. (49 mm)
Maximum Weight	8.0 lb (3.7 kg)

UC Engine Bracket Assembly Dimension Drawing

UC-BRKT-200-S-Z-ASSY

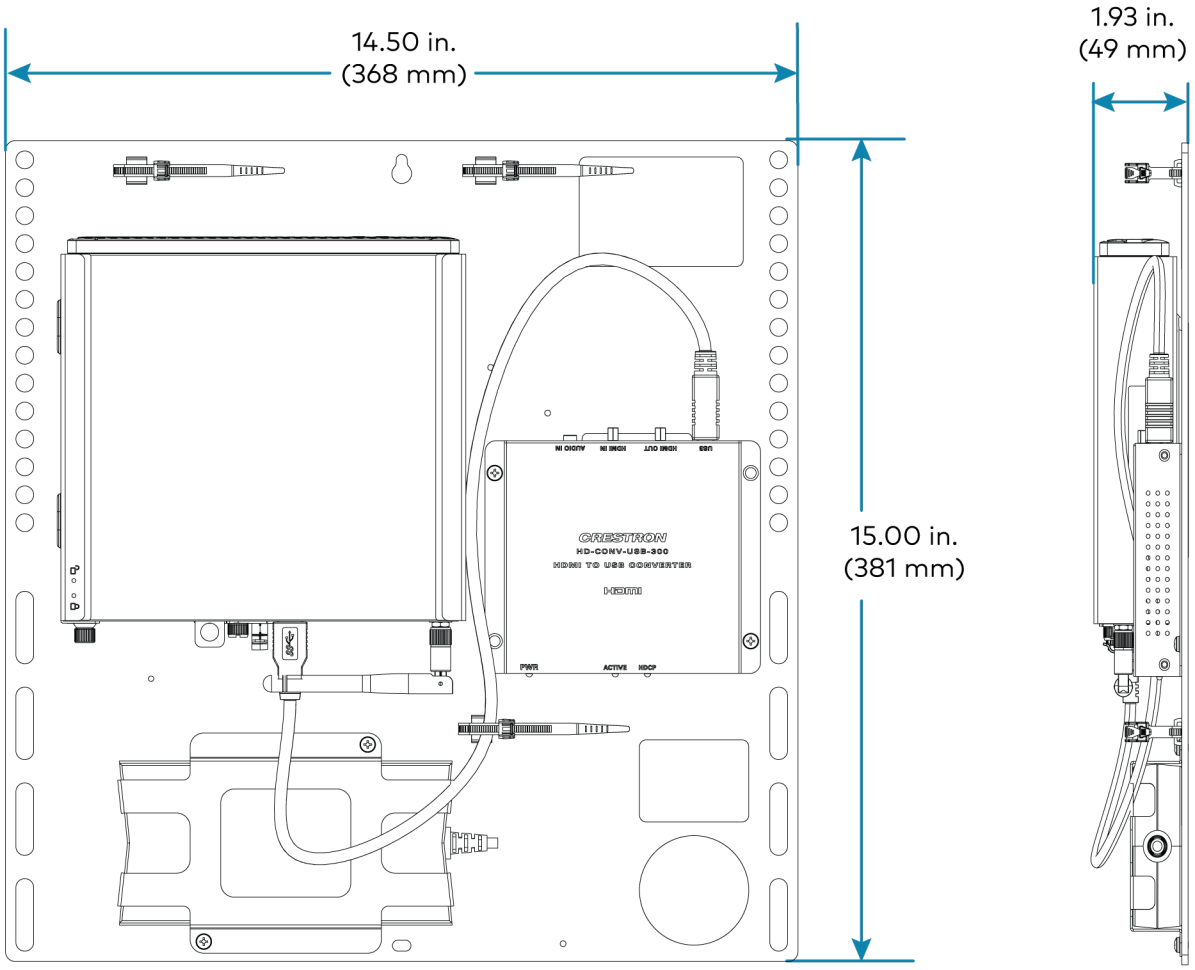

UC-BRKT-250-P-Z-ASSY

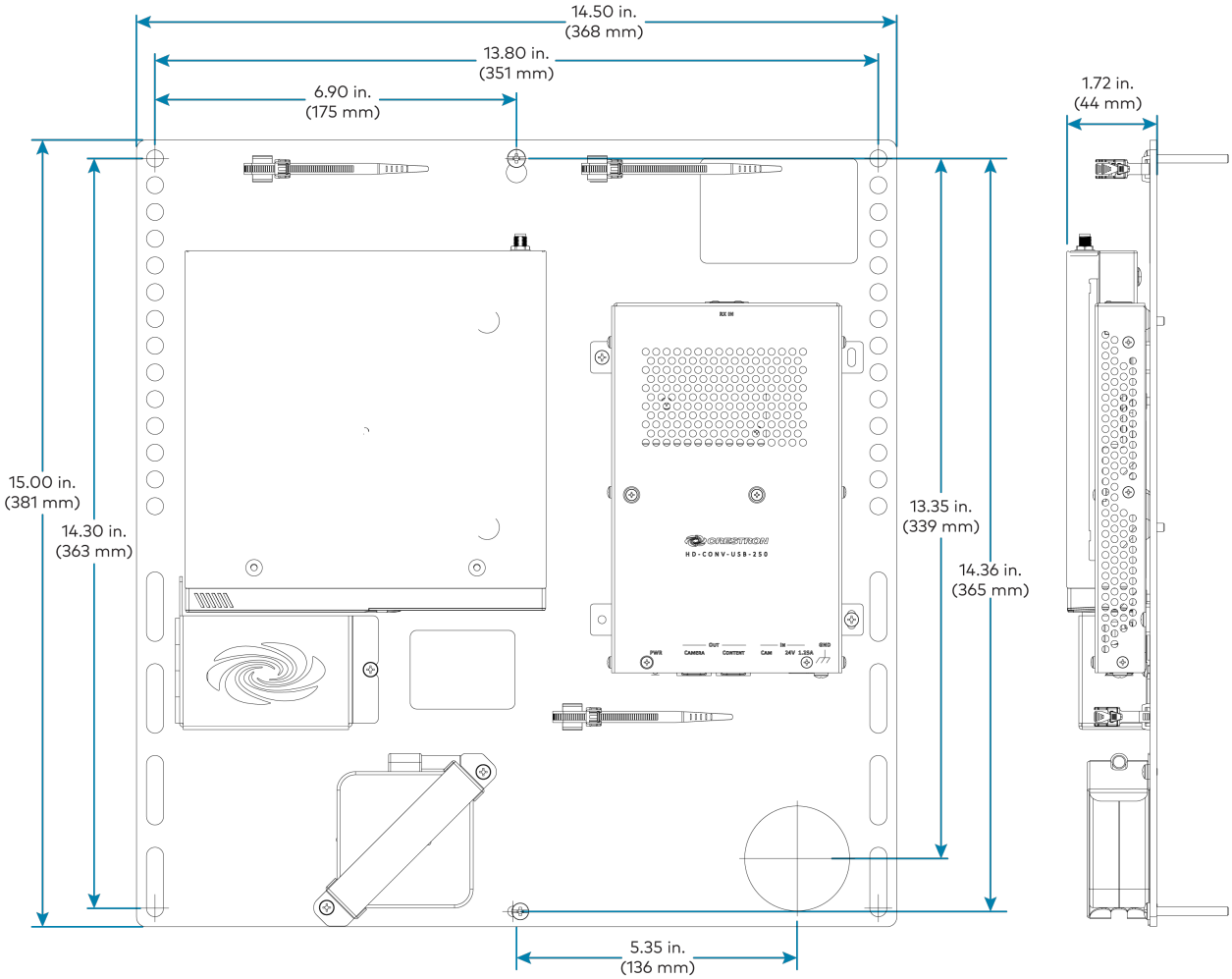

UC-BRKT-260-P-Z-ASSY

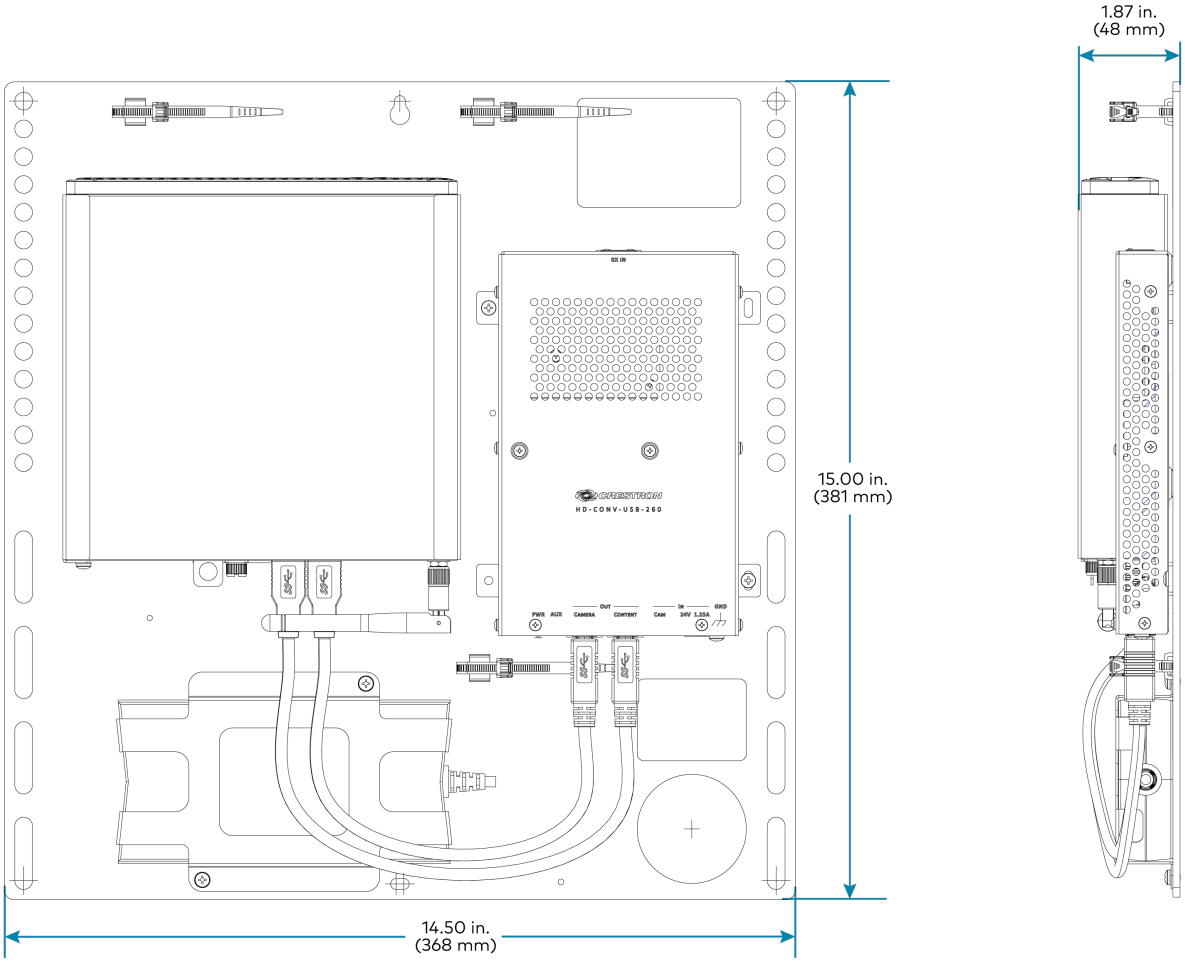

UC-BRKT-200-PRO-Z-ASSY with HD-CONV-USB-200

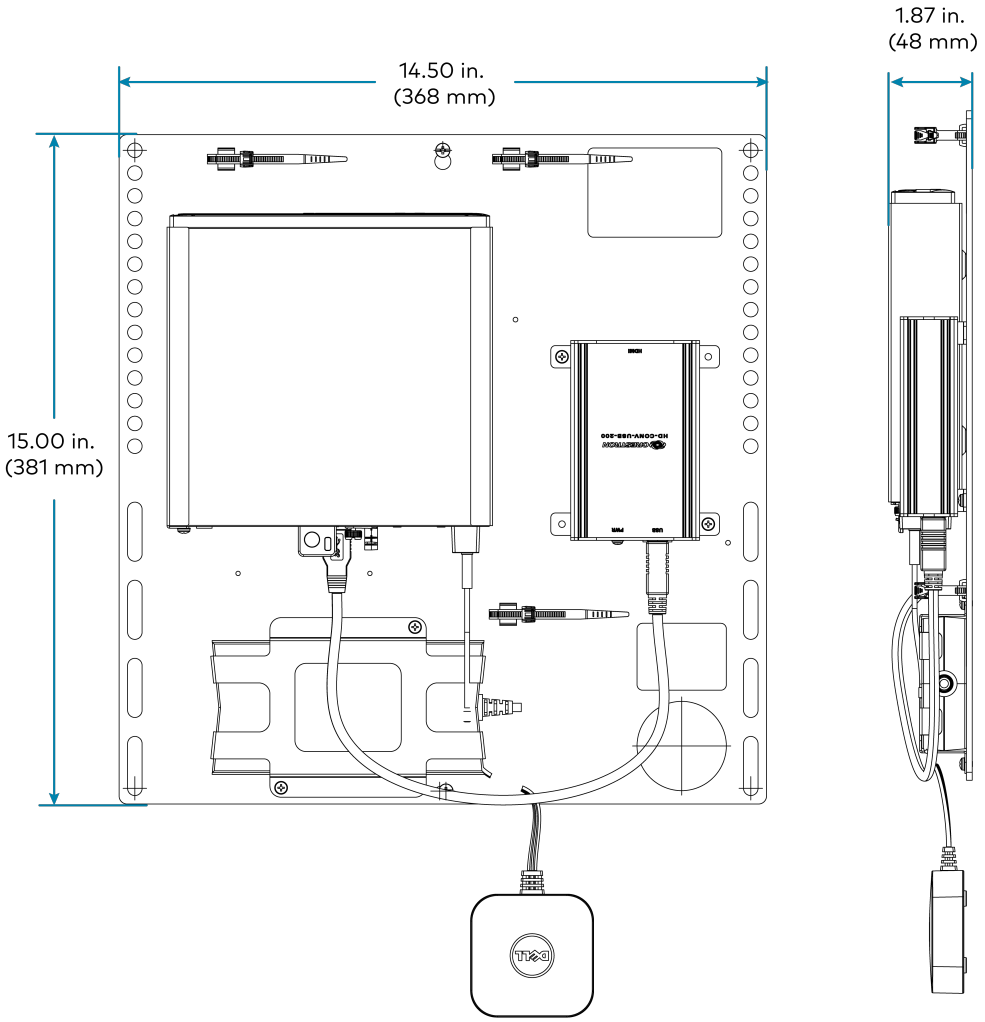

UC-BRKT-200-PRO-Z-ASSY with HD-CONV-USB-300

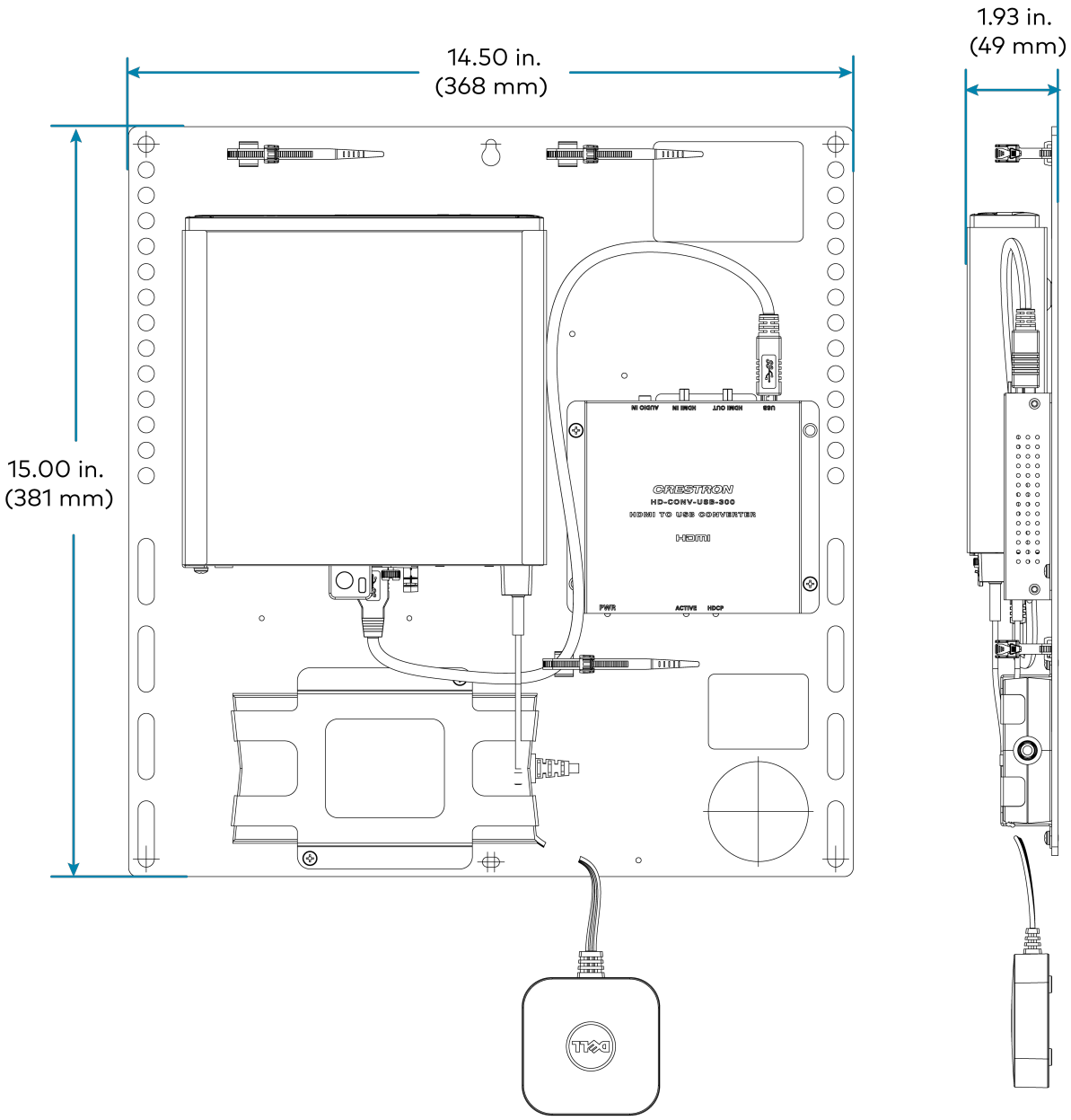

UC-BRKT-260-PRO-Z-ASSY

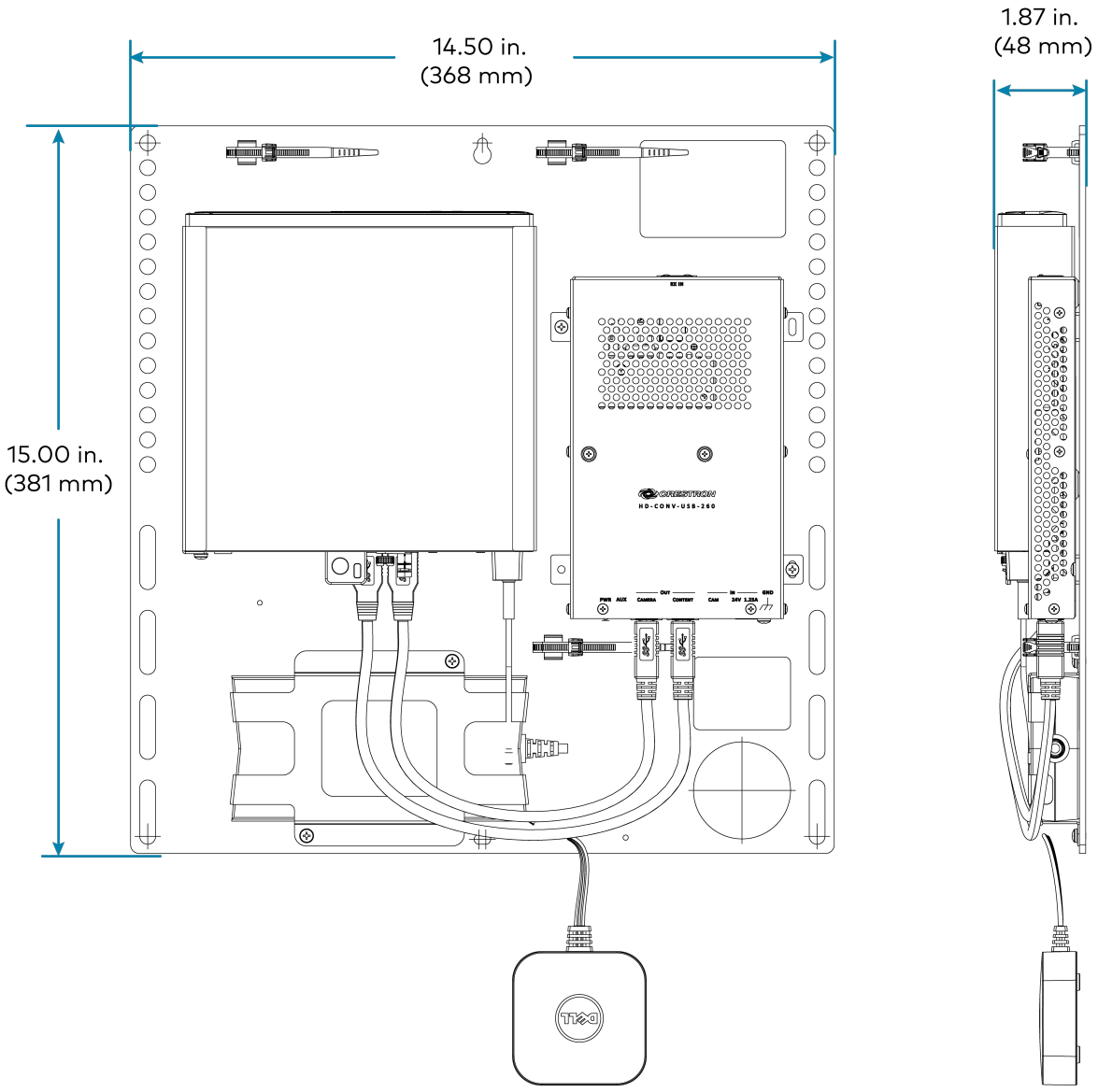

UC Presentation Transmitter Specifications

Video Input Signal Types	HDMI, DisplayPort 1.2 via USB-C port
Video Output Signal Types	HDMI over CAT5
Resolution	1080p
Video Content Protection	HDCP 1.4 and HDCP 2.2
Audio Input Signal Types	HDMI, DisplayPort 1.2 via USB-C port
Audio Output Signal Types	HDMI over CAT5
Communications	Ethernet: 100 Mbps, auto-switching, auto negotiating, auto-discovery HDMI over CAT5: HDCP, Ethernet HDMI: HDCP USB: USB 2.0 and USB 3.0
Connectors	LAN PoE: (1) 8-pin RJ-45 connector; ACC: (1) USB 3.0 Type B connector; For firmware loading only; USB A: (1) USB 2.0 Type A connector; USB B: (1) USB 2.0 Type B connector; USB: (1) USB 2.0 Type-C connector; HDMI IN: (1) HDMI Type A; To RX: (1) 8-pin RJ-45 connector; Power Jack: (1) DC power connector; LAN: (1) 8-pin RJ-45 connector; Ground: (1) 6-32 screw
Indicators	PWR: (1) Green LED, indicates operating power supplied via power supply Ethernet: (2) LEDs on To RX port; Green indicates Ethernet link status; Amber indicates Ethernet activity
Power Supply	24VDC, 6A, 100-240VAC
Device Charging	Up to 60 W charging for devices connected via USB-C port
Construction	Metal, black finish, integral mounting flanges; Vented top, front, bottom, and sides
Mounting	Surface mount for mounting under table; Attaches to a single rack rail
Dimensions	Height: 1.58 in. (40 mm) Width: 9.25 in. (235 mm) Depth: 8.20 in. (208 mm)

UC Presentation Transmitter Dimension Drawing

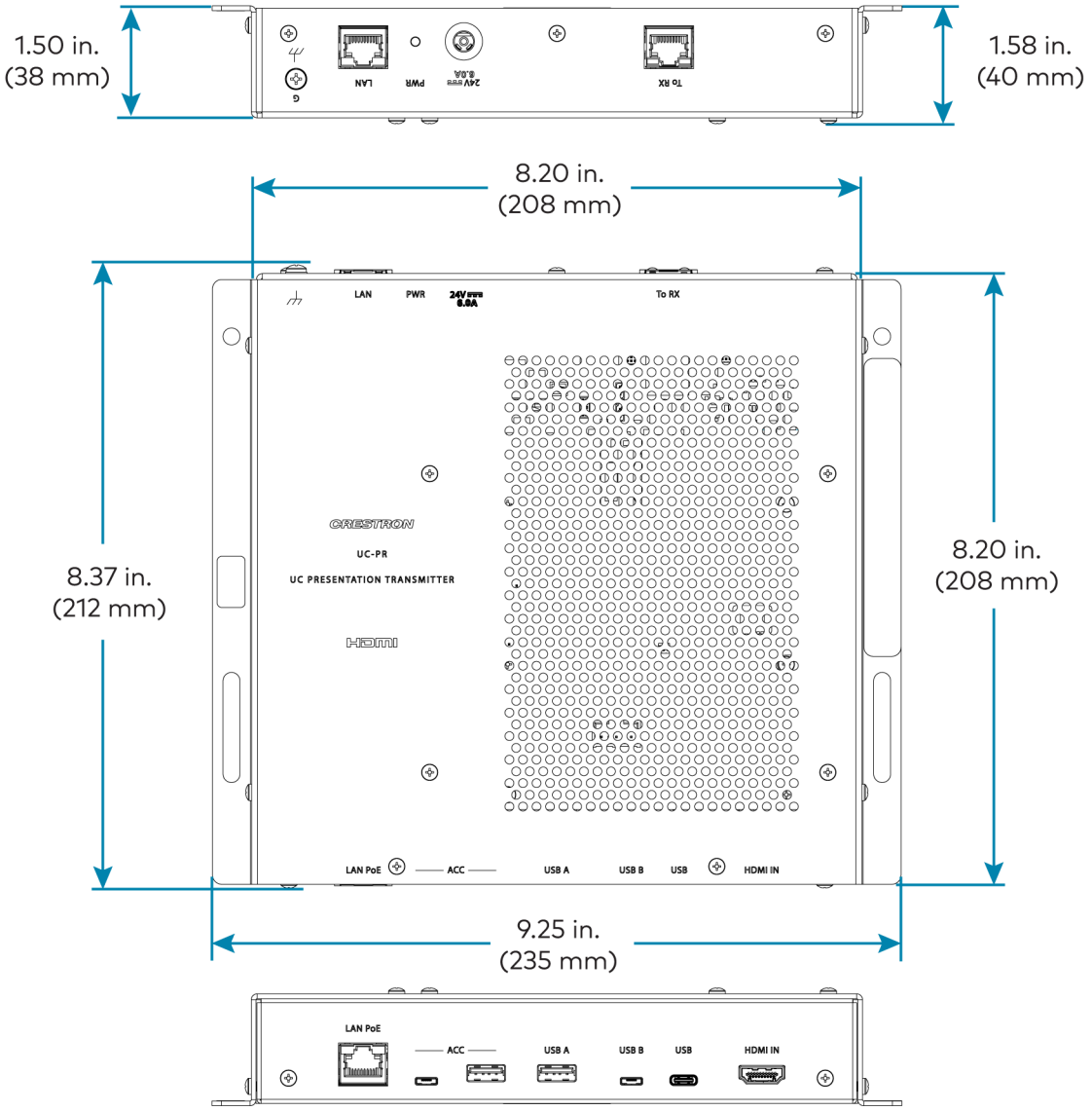

Microphone Pod Specifications

Model	CCS-UCA-MIC
Communications	A2B bus protocol, slave, synchronous data, multichannel I2S/TDM to I2S/TDM
Microphone	Triple mic array with (3) cardioid electret elements
Pickup Range	20 ft (6 m) typical, 360°
Mic Mute	(1) Capacitive button with bi-color LED, toggles between mute and unmute (affects all system mics)
Connectors	(2) RJ9 4P4C connector, female
Power	Powered via the conference device through the A2B bus
Dimensions	Height: 0.97 in (25 mm) Width: 3.81 in (97 mm) Depth: 3.42 in (87 mm)

Microphone Pod Dimension Drawing

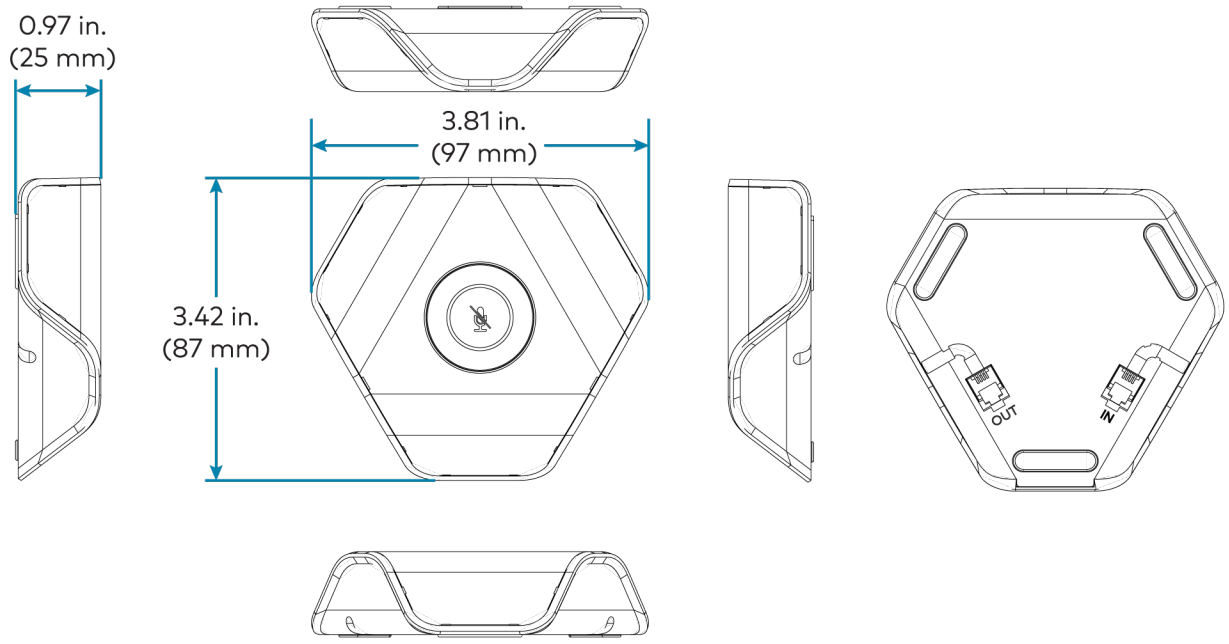

Zoom Rooms Deployment and Setup

Minimum Requirements

- A Zoom Rooms account or activation code is required to set up a Zoom Rooms system.
- Zoom Room administrator access is required to create and modify Zoom rooms.

Pre-Deployment Checklist

Complete the following tasks to ensure successful deployment of your Crestron® Flex conference room solution.

TASK	REQUIREMENT	NOTES
Verify Accounts/Configure Solution	Zoom Rooms account credentials	When purchasing a Crestron Flex for use with Zoom Rooms, the Zoom Rooms desktop client is preinstalled on the UC-ENGINE. For guidelines on how to configure accounts for Zoom Rooms, visit Setup & Configuration on the Zoom Rooms Help Center.
Confirm Connection Points	Two (2) Gigabit LAN Ports	Ensure the installation space has two available gigabit LAN ports connected to the same VLAN on the same network.
Configure Network Server	Configure your network to provide an IP address using DHCP.	Crestron Flex for Zoom Rooms does not require tabletop devices to communicate with the UC-Engine directly. Each device requires Internet access to the Zoom Cloud service.
Establish Network Communications	Open the required TCP and UDP ports.	Open TCP ports 80, 443, 8801, and 8802. Open UDP ports 3478, 3479, and 8801 through 8810. For more information, visit Network Firewall or Proxy Server Settings for Zoom and Firewall Configuration for Zoom Rooms.

Initial Setup

Connect and start your selected solution as described in Quick Start Guides on page 381. For detailed instructions on planning, deploying, and managing the Zoom Rooms system, visit Zoom's

Documentation.

Quick Start Guides

Refer to the following instructions to correctly install and connect various Zoom Rooms solutions.

To Install and connect the UC-B70-A-Z and UC-B70-A-Z-I with AIO Videobar 70 solution, select UC-B70-A-Z and UC-B70-A-Z-I on page 385.

To install and connect B30/BX30, C100/CX100, MM30/MMX30, M50/MX50, and M70/MX70 series solutions powered by the UC Engine (mini PC attached to the UC Engine Bracket Assembly):

1. Identify the UC Engine model included with your Crestron Flex solution.

   NOTE: The UC Engine is available in various models. Therefore, identify the included UC Engine model before installing the selected room solution and making system connections.

   - **Dell UC Engine**

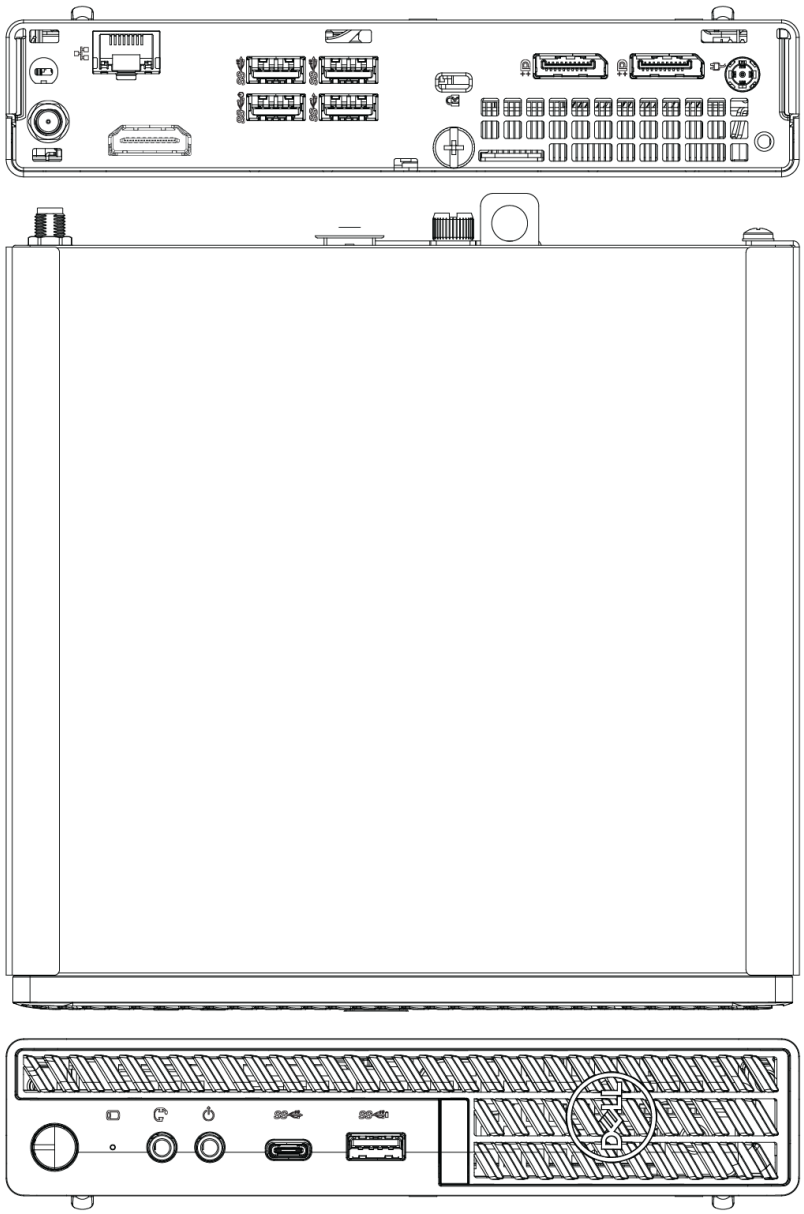

- **ASUS UC Engine**

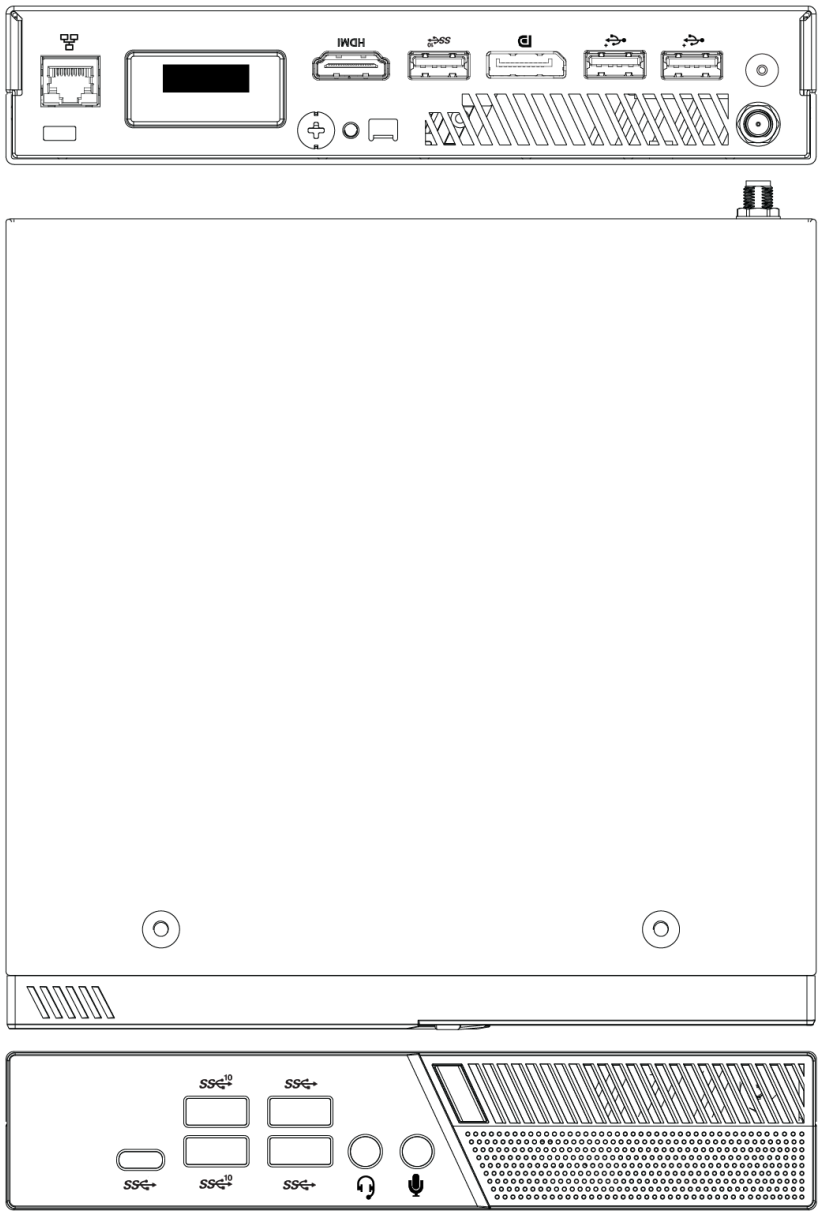

- **Lenovo UC Engine (Discontinued)**

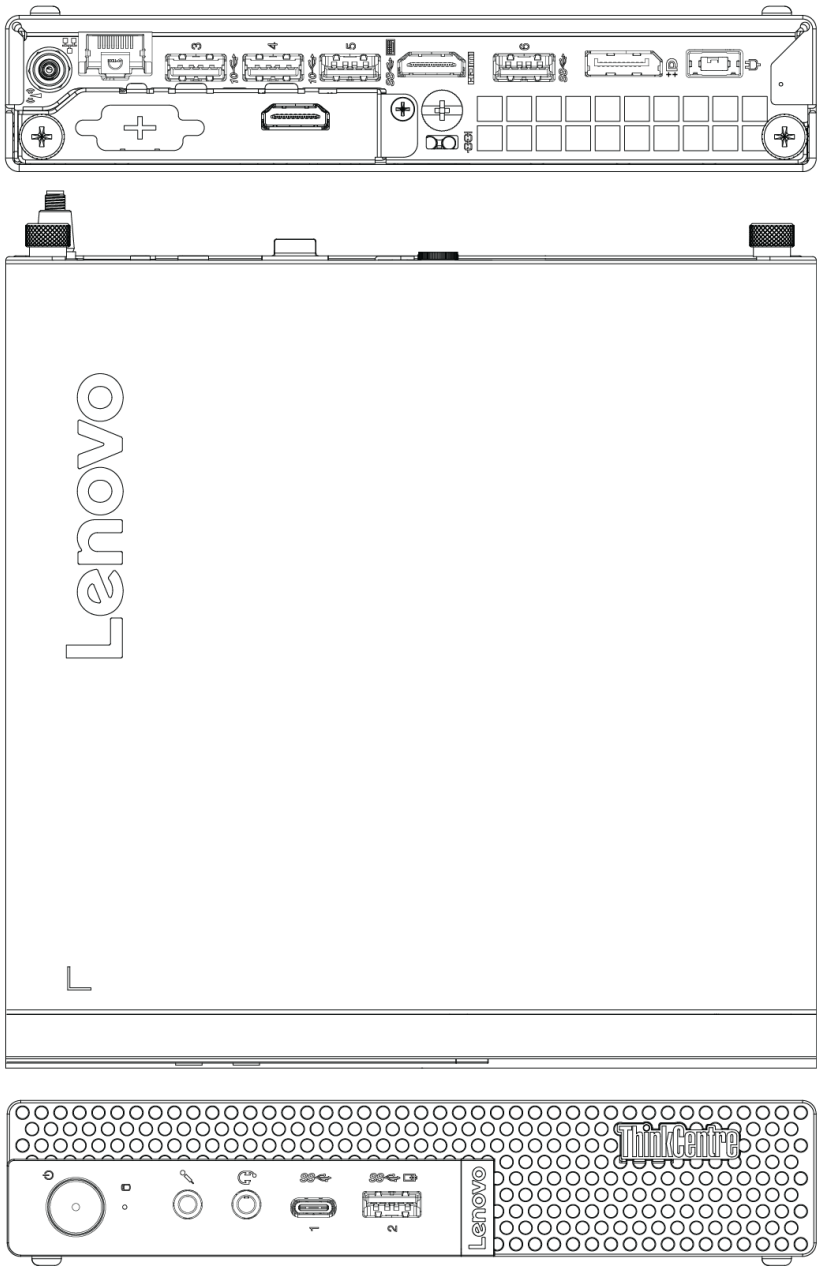

2. Once Identified, refer to the following sections for installing the devices and making system connections.
    - Zoom Rooms with Dell UC Engine.
    - Zoom Rooms with ASUS UC Engine.

Refer to Discontinued Solutions on page 699 to install and connect the discontinued Zoom Rooms solutions (including solutions powered by the discontinued Lenovo UC Engine).

UC-B70-A-Z and UC-B70-A-Z-I

Minimum Requirements

Ensure that the below requirements are met prior to setting up the system.

- A Zoom Rooms account or activation code (not included).
- A video display (not included) connected to the videobar. A second display is optional.

In the Box

Qty.	Description
	Crestron Videobar 70
1	Crestron Videobar 70 (6512358 or 6512360)
2	Screw, M5 X 16 mm (2062699)
1	Power Adapter, DC, (2062700)
1	Power Cable, AC (2062701)
2	Inner Screw, Hex, M5 X 16 mm (2062702)
3	Wall Screw, Self Tap, 1.25 in. (32 mm) (2062704)
3	Anchor, White (2062705)
1	Wall Anchor Key (2062716)
1	Cable Shroud, Phoenix (2062717)
1	Wall Bracket, Black (2062718)
	Tabletop Touch Screen Device
1	10 in. Tabletop Touch Screen (6513439)
1	Grommet, Cable, Closed (2055455)
1	Grommet, Cable, Open (2055456)
1	Cover, Cable compartment (2055457)
	Additional Items
1	Cable, CAT5e, RJ-45 - RJ-45, 7 ft (2.1 m) (6509924)
1	Cable, CAT6a, RJ-45 - RJ-45, 20 ft (6.1 m) (6507640)
2	Cable, HDMI® 2.1, 6 ft (1.8 m) (6512150)
1	Cable, HDMI 2.1, 9 ft (2.7 m) (6512151)
1	PoE injector (6502429)

Mount the Crestron Videobar 70

The videobar can be placed on a flat surface or mounted on a wall.

Mount on a Wall

The videobar includes anchors that are suitable for mounting it on sheetrock walls up to 1/2 in. (13 mm) thickness. Masonry and other materials may require additional installer-supplied mounting hardware.

> **NOTE:** A template is included as a reference for drilling holes for the wall mounting bracket. Use the template to maintain sufficient clearance between the videobar and the display device.

The following tools are required to mount the videobar:

- Drill with 5/16 in. bit (not included)
- #1 Philips screwdriver (not included)

Preparing the Wall Mounting Surface

- For optimal viewing results, the videobar should be installed at a minimum height of 42 in. (1066 mm) or higher from the floor depending on the height of the table in front of it.
- A minimum distance of 2.25 in. (57 mm) should be maintained between the wall mounting bracket and the display device.

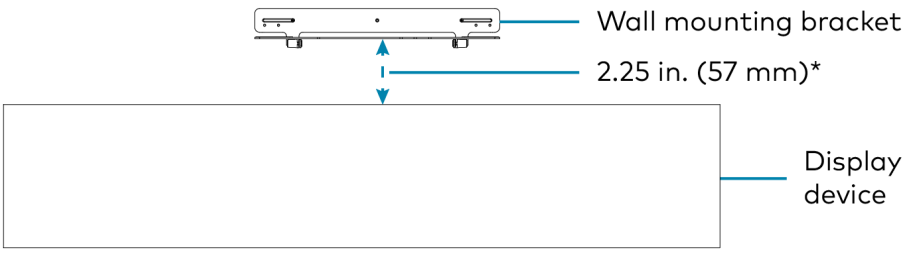

* Minimum distance between the wall mounting bracket and the display device

Mount the Wall Bracket

1. Attach the template to the desired mounting location.

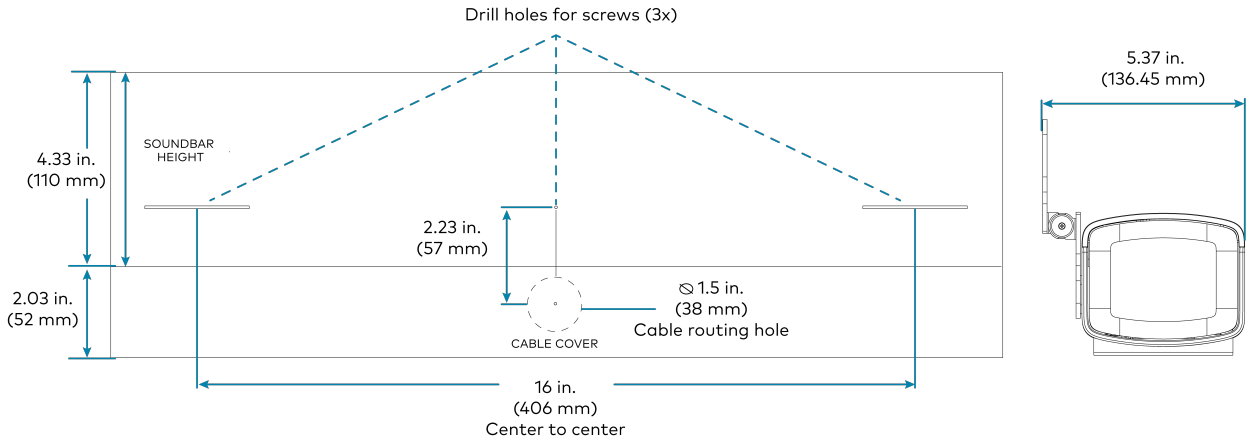

2. Drill three holes for the 1.25 in. (32 mm) wall screws and one 1.5 in. (38 mm) hole for cable routing as shown in the diagram.
3. Install the three included wall anchors into the drilled holes. Then, insert the anchor key to pop open and lock the anchors behind the hollow wall (not required for thick or solid walls).
4. Position the wall mounting bracket over the anchors, and insert the 1.25 in. (32 mm) screws into the holes.

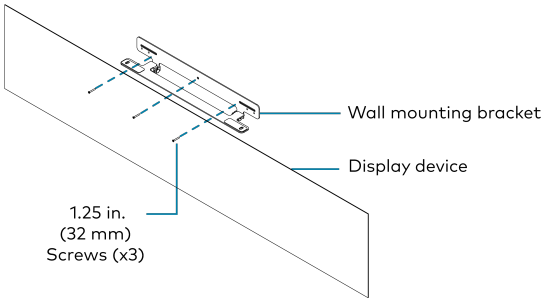

5. Tighten the screws with a #1 Philips screwdriver until the bracket is secured to the wall.

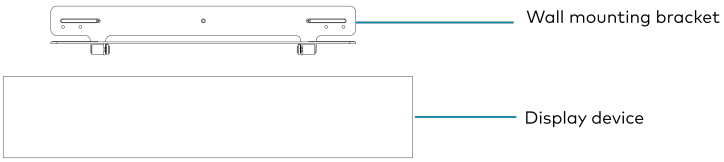

6. Place the videobar on the bracket aligning the screw holes on the bottom of the device with the holes on the bracket.
7. Insert the M5 X 16 mm hex screws (2062702) or M5 X 16 mm screws (2062699, security) from beneath the bracket and then through the holes on the bottom of the videobar.
8. Adjust the screws to keep the videobar secured to the bracket but do not tighten them.

9. Tilt the bracket down and place the videobar face down.
10. Route the cables through the cable cutout in the bracket and connect the cables to the videobar's ports as described in Connect on page 389.

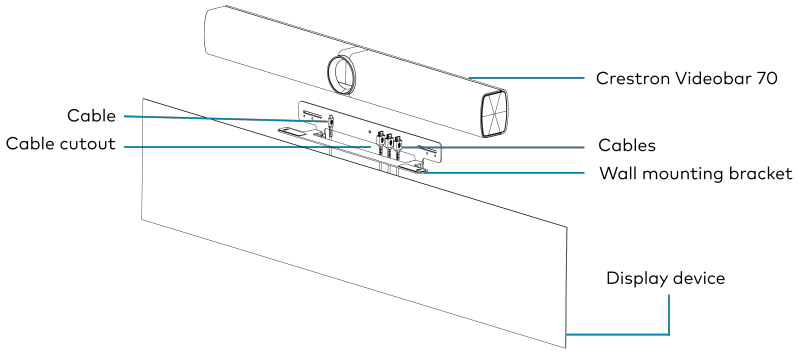

11. Rotate the bracket up and push the videobar against the bracket to lock it.

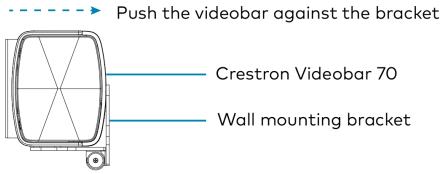

12. Tighten the M5 X 16 mm hex screws (2062702) or M5 X 16 mm screws (2062699, security) from beneath the bracket to secure the videobar to the bracket.

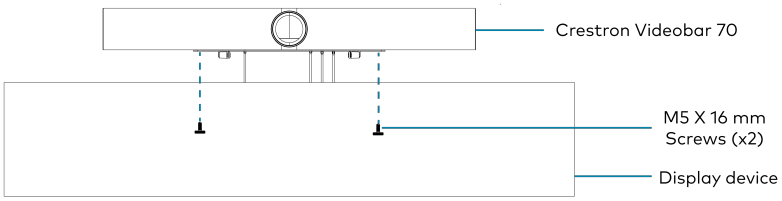

13. Attach the magnetic cable shroud to the videobar to hide the exposed connected wires and cables.

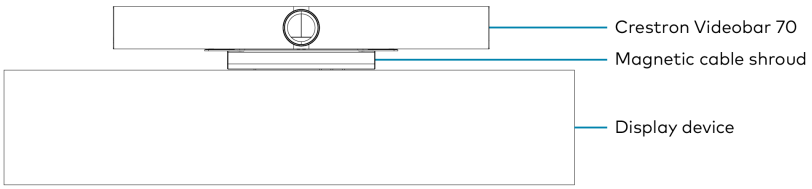

Connect

System Overview

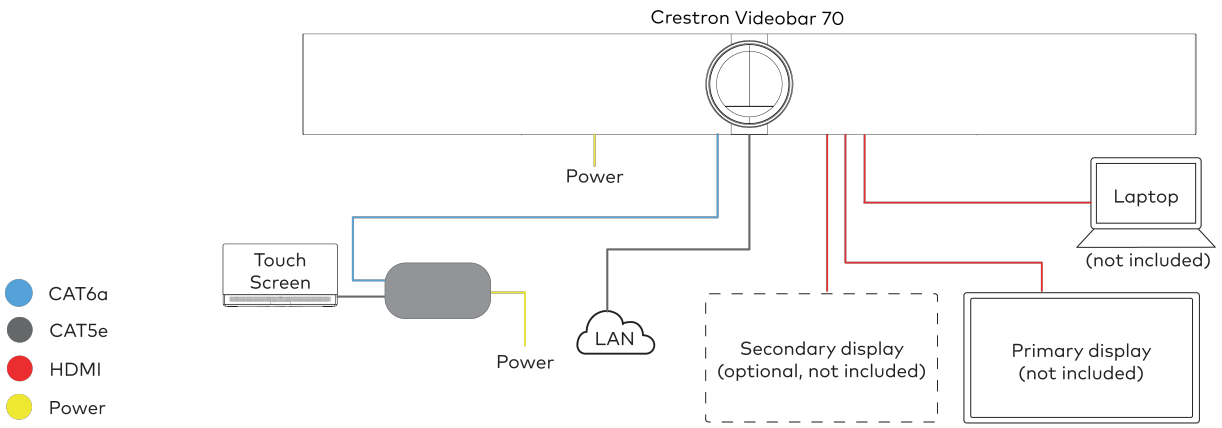

Make Connections

1. Make a direct connection for simple installation and setup by connecting the touch screen's PoE injector to the videobar.

Direct Connection

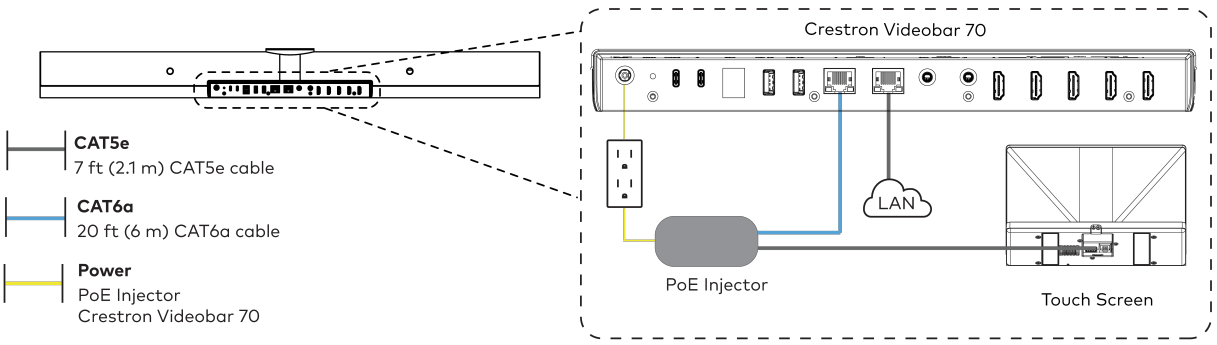

2. Make a network connection.

Network Connection

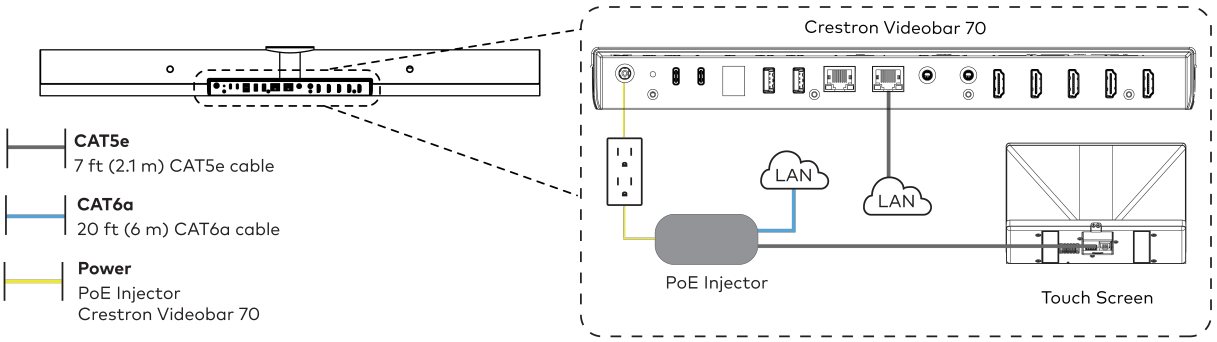

3. Connect the displays (not included) to the videobar.

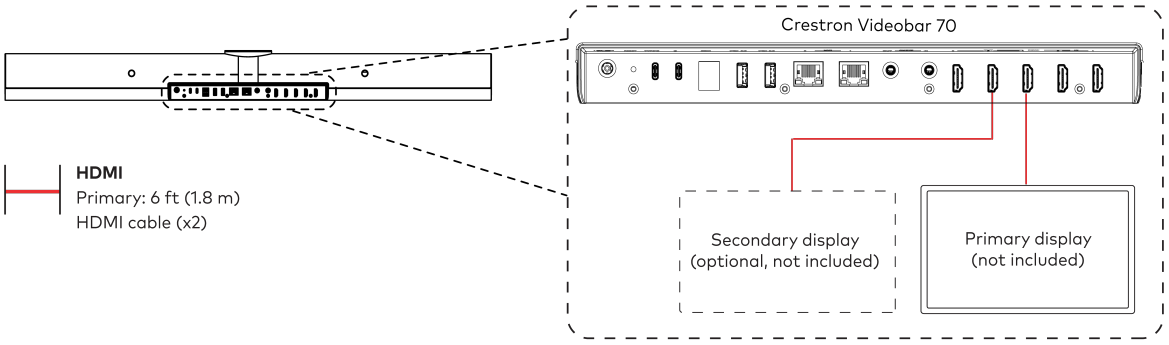

4. Connect a laptop (not included) to the videobar.

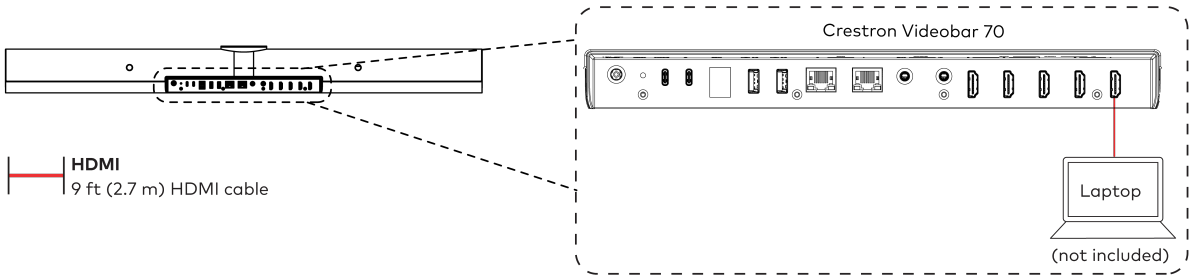

Observe the LEDs

Refer to the following table for information about the LED indicators on the videobar.

LED Indicator	Function	Color	Behavior	Indication
LED Ring	Mute	Red	Solid	Audio is muted.
	Unmute	Green	Solid	Audio is unmuted.
	Booting Status	Green	Blinking (1/4s On, 1/4s Off)	The videobar is under booting process.
	Firmware Status	Green	Blinking (1s On, 1s Off)	The firmware is being updated.

Configure

Apply Power

Apply power to the videobar and the other devices in the system.

Setup and Update the Videobar

1. Connect the videobar to the internet to upgrade the firmware automatically.

   After the upgrade, a pairing code appears on the display to be entered on the connected touch screen.
2. Enter the code to pair the touch screen with the display.

Factory Restore

To factory restore the videobar:

1. Ensure the videobar is connected to the display to view the restore process.
2. Press and hold the recessed **RESET** button on the back of the videobar (using a paper clip or a similar tool) for ten seconds to initiate the factory restore.
3. Release the button when the "Factory Data Reset" message appears on the display.
   The system will display a black screen if the **RESET** button is not released when the "Factory Data Reset" message is displayed. Power cycle and repeat step 1.

   > **NOTE:** The factory restore erases all user data, and the videobar returns to its initial booting status.

4. After rebooting, perform a soft restore using the web UI to enable the authentication again.

Log In to the Zoom Rooms Service Using the Touch Screen

1. Select **Zoom Room Controller** from the options to confirm the use of the touch screen as a Zoom Rooms controller, and tap **Next**.
2. Enter the pairing code shown on the display to pair the touch screen with the videobar. The Zoom Rooms controller app is displayed.
3. Tap **Sign in** to sign in to Zoom Rooms service with an activation code or email.
   - **Activation Code:**
     a. Tap **Enter Activation Code**.
     b. Enter the 16-digit activation code provided by the administrator to activate the Zoom Room that is assigned to the activation code. The Zoom Rooms Conference Room screen is shown on the display.
   - **Email:**
     a. Enter the email credentials and tap **Sign In**.
     b. Select the conference room name from the list and tap **Next**. The Zoom Rooms Conference Room screen is shown on the display.

Zoom Rooms with Dell UC Engine

This section provides the following information:

UC-B30-Z and UC-B30-Z-WM

Minimum Requirements

Ensure that the below requirements are met prior to setting up the system.

- A video display (not included) connected to the UC Engine. A second or third display is optional.
- A Zoom Rooms account or activation code (not included).

> **NOTE:** Unless otherwise indicated in this section, the connection procedure is the same for UC-B30-Z and UC-B30-Z-WM.

In The Box

Qty.	Description	UC-B30-Z	UC-B30-Z-WM
	Tabletop Touch Screen		
1	10.1 in. Tabletop Touch Screen (6510821)	✓	✗
1	Grommet, Cable, Closed (2055455)		
1	Grommet, Cable, Open (2055456)		
1	Cover, Cable compartment (2055457)		
	Wall Mount Touch Screen		
1	10.1 in. Wall Mount Touch Screen (6510814)	✗	✓
	Mounting hardware		
	UC Bracket Assembly		
1	UC Bracket Assembly with UC Engine and HDMI content ingest (UC-BRKT-200-S-Z-ASSY, 6512690)	✓	✓
2	Anchor, Drywall, Plastic, 3/8 in. x 1/2 in. (9.5 mm x 12.7 mm) (2052565)		
1	Key, Anchor (4529654)		
2	Screw, 8-AB x 1-1/2 in. (38.1 mm), Pan Head, Combo (2052567)		
4	Tie Wrap (2047935)		
	Crestron Flex Smart Soundbar with Camera		
1	UC-SB1-CAM-FLEX Soundbar with Camera (6511283)	✓	✓
1	Power supply (2045873) with cord (2042043)		
1	Cable, USB 3.0, A - B, 6 ft (1.8 m) (2053077)		
	Mounting hardware		
	Additional Items		
1	PoE injector (6502429)	✓	✓
2	Cable, CAT5e, RJ-45 - RJ-45, 7 ft (2.1 m) (6509924)	✓	✓
1	Cable, HDMI 2.1, 6 ft (1.8 m) (6512150)	✓	✓
1	Cable, HDMI, 20 ft (6.1 m) (6503567)	✓	✓
1	Cable, DisplayPort™ to HDMI, 6 ft (1.8 m) (6508282)	✓	✓

Mount Devices

Mount the UC Bracket Assembly

Mount the UC Bracket Assembly to VESA® compliant display devices, a wall, or other building structure. Anchors and screws are supplied for installation on walls with 3/8 in. (9.5 mm) to 3/4 in. (19 mm) thickness.

CAUTION: Preinstalled screws may protrude from the back of the UC Bracket Assembly. Exercise caution when handling the UC Bracket Assembly to avoid scratching or damaging surfaces.

NOTE: The integrated cable tie wraps are reusable. Avoid damaging the cable tie wraps.

Mount the Soundbar with Camera

Mount the included smart soundbar with camera according to the UC-SB1-CAM-FLEX Quick Start (Doc. 8606).

Mount the Wall-Mount Touch Screen

Mount the included wall-mount touch screen according to the TSW-1070 Product Manual (Doc. 8550).

Identify the UC Bracket Assembly

The UC Bracket Assembly is available in two models. Identify the model included with your Crestron Flex system. Tap or click the corresponding image below to navigate to the appropriate connection instructions.

UC Bracket Assembly with HD-CONV-USB-200

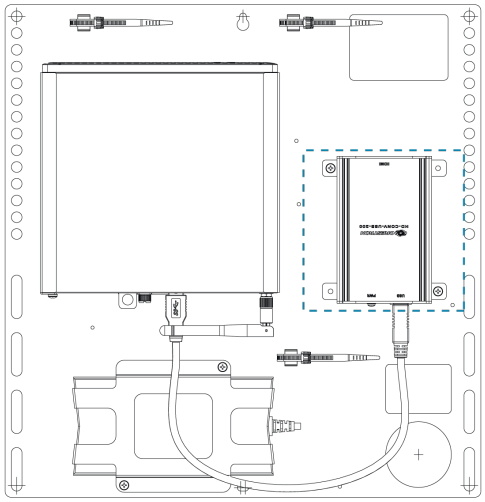

UC Bracket Assembly with HD-CONV-USB-300

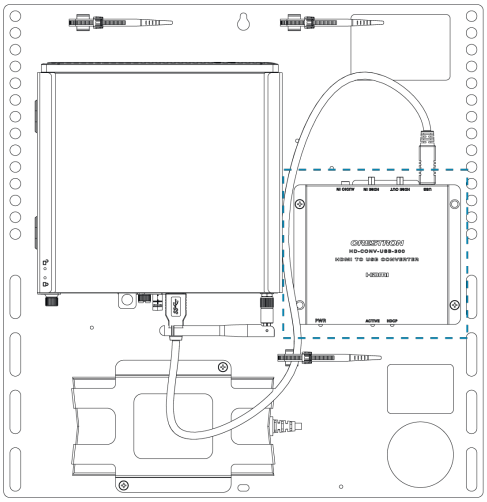

System Overview

For UC Bracket Assembly with HD-CONV-USB-200

When connections are complete, the system appears as shown below. Refer to Make Connections on page 398 for detailed connection instructions.

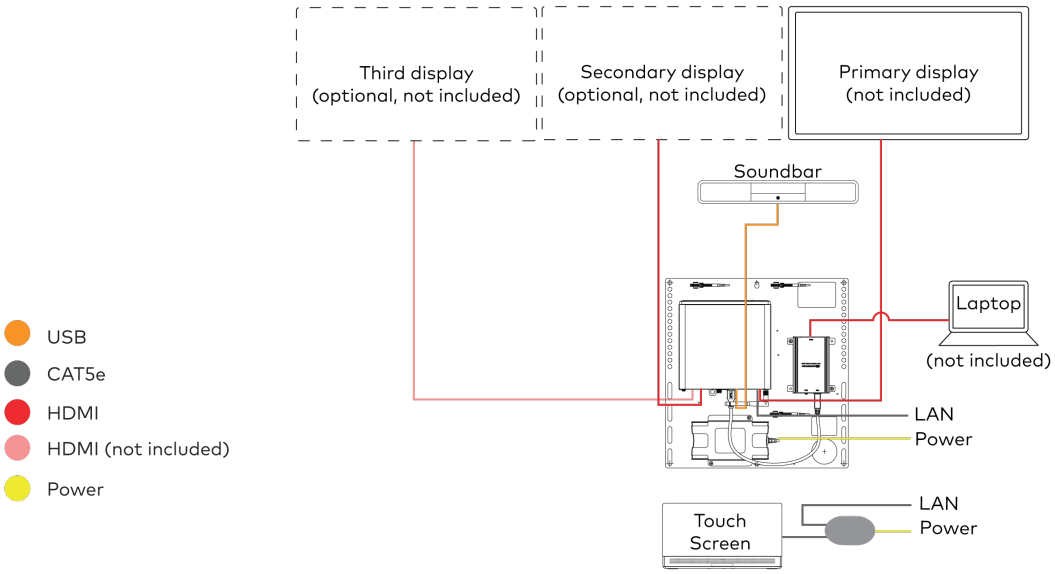

For UC Bracket Assembly with HD-CONV-USB-300

When connections are complete, the system appears as shown below. Refer to Make Connections on page 398 for detailed connection instructions.

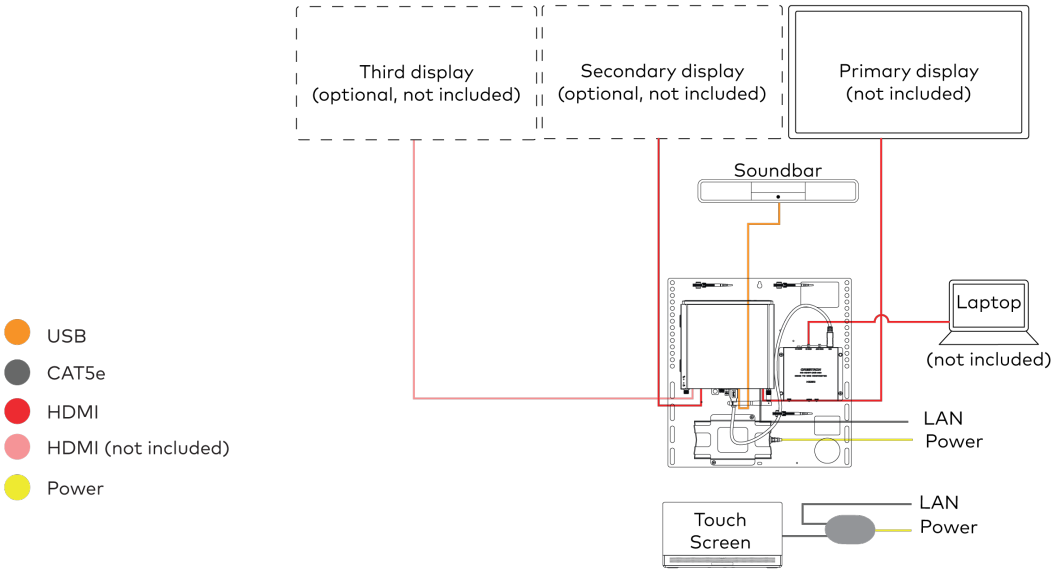

Make Connections

NOTE: For reference, the UC Bracket Assembly is shown with the HD-CONV-USB-200 in the following connection diagrams. Unless otherwise indicated in this guide, the connections remain the same for the UC Bracket Assembly with HD-CONV-USB-200 and HD-CONV-USB-300.

1. Make UC Engine and touch screen connections as shown in the following illustration.

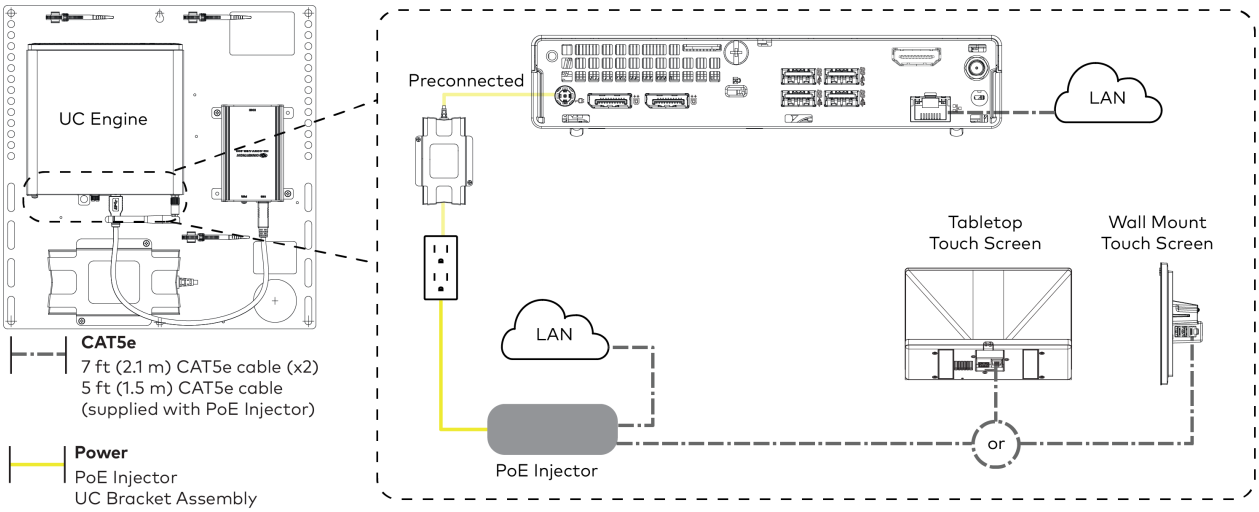

2. Connect displays to the UC Engine.

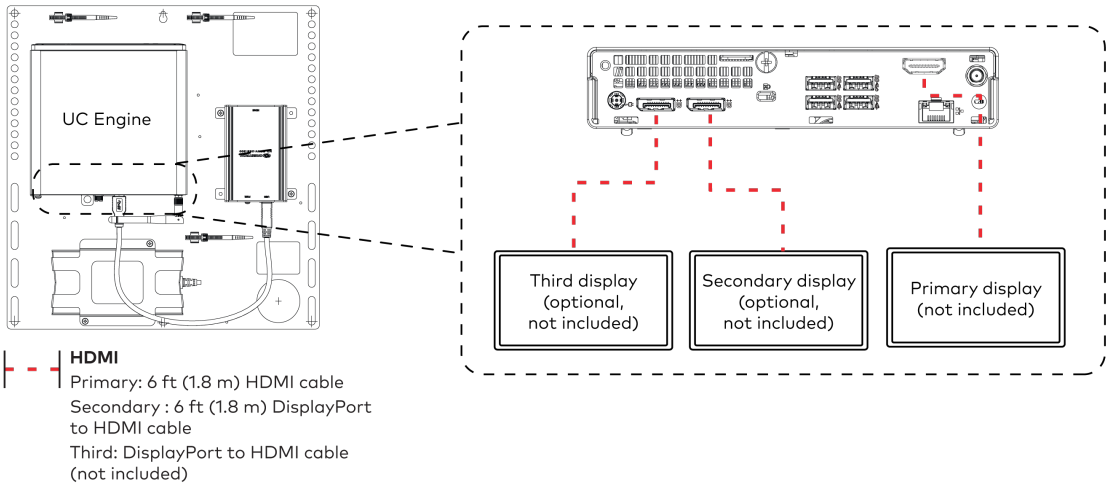

3. Connect the soundbar to the UC Engine as shown in the image below. Do not connect the soundbar to any of the other USB ports.

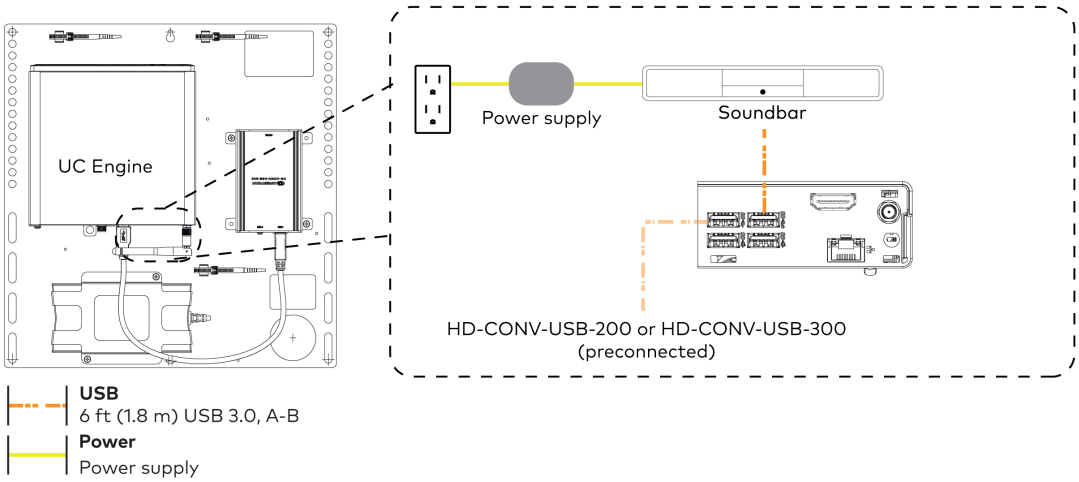

4. Connect a laptop to the HD-CONV-USB-200 or HD-CONV-USB-300.

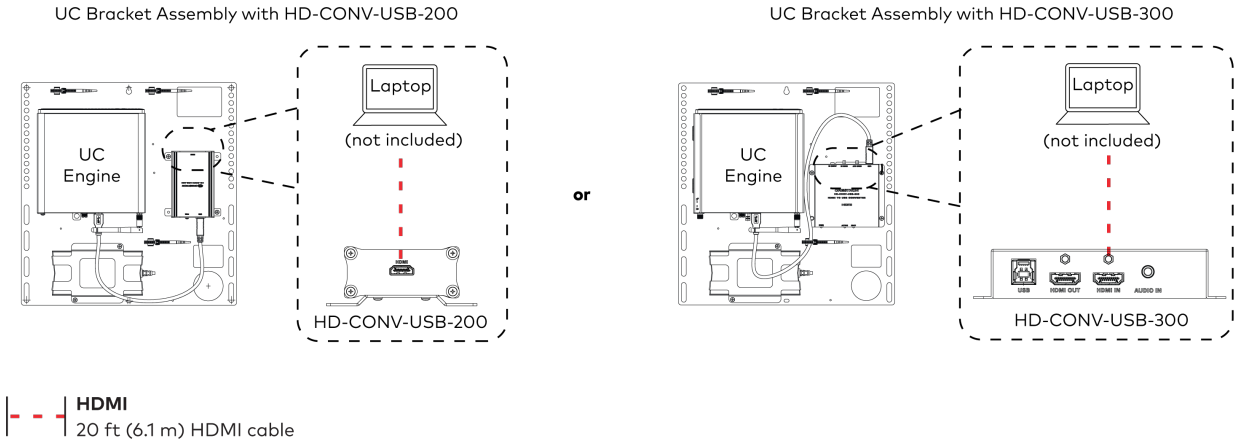

5. Bundle the cables to the bracket assembly with the integrated cable tie wraps. The cable tie wraps are reusable.

Apply Power

Press the power button on the bottom of the UC Engine and apply power to all of the other devices in the system. The connected display device will show a pairing code.

Log In to the Zoom Rooms Service

1. Tap **Touch Here to Enable a Specific Application** on the bottom of the screen. A list of applications is displayed.
2. Tap **Zoom Rooms** and then tap **Confirm**. The touch screen will reboot.
3. Enter the pairing code shown on the display to pair the touch screen with the UC Engine. The Zoom Rooms controller app is displayed.

4. Log in to the Zoom Rooms service with an activation code or Zoom Rooms Credentials (email and password).
    - **Activation Code:**
        a. Tap **Enter Activation Code**.
        b. Enter the 16-digit activation code provided by the administrator to activate the Zoom Room that is assigned to the activation code. The Zoom Rooms Conference Room screen is shown on the display.
    - **Sign In:**
        a. Tap **Sign In**.
        b. Enter the Zoom Room credentials and tap **Sign In**.
        c. Select the conference room name from the list and tap **Next**. The Zoom Rooms Conference Room screen is shown on the display.
5. Tap **Settings**. If a password is required, enter the password (the default password is "1234"). The **Settings** screen is displayed.
6. Tap **Microphone** and select the soundbar as the source.
7. Tap **Speaker** and select the soundbar as the source.
8. Tap **Meet Now** to exit.

Configure the System

Connect a USB keyboard and mouse (sold separately) to a USB port on the UC Engine to configure system features, as described in Configuration on page 553. For detailed information on using Zoom Rooms, refer to the Zoom Rooms Help Center.

UC-BX30-Z and UC-BX30-Z-WM

Minimum Requirements

Ensure that the below requirements are met prior to setting up the system.

- A video display (not included) connected to the UC Engine. A second or third display is optional.
- A Zoom Rooms account or activation code (not included).

> **NOTE:** Unless otherwise indicated in this section, the connection procedure is the same for UC-BX30-Z and UC-BX30-Z-WM.

In The Box

Qty.	Description	UC-BX30-Z	UC-BX30-Z-WM
	Tabletop Touch Screen		
1	10.1 in. Tabletop Touch Screen (6510821)	✓	✗
1	Grommet, Cable, Closed (2055455)		
1	Grommet, Cable, Open (2055456)		
1	Cover, Cable compartment (2055457)		
	Wall Mount Touch Screen		
1	10.1 in. Wall Mount Touch Screen (6510814)	✗	✓
	Mounting hardware		
	UC Bracket Assembly		
1	UC Bracket Assembly with UC Engine and HDMI or AV over CAT5 content ingest (UC-BRKT-260-P-Z-ASSY, 6512692)	✓	✓
1	Power pack (2045870)		
2	Anchor, Drywall, Plastic, 3/8 in. x 1/2 in. (9.5 mm x 12.7 mm) (2052565)		
1	Key, Anchor (4529654)		
2	Screw, 8-AB x 1-1/2 in. (38.1 mm), Pan Head, Combo (2052567)		
4	Tie Wrap (2047935)		
	Crestron Flex Smart Soundbar with Camera		
1	UC-SB1-CAM-FLEX Soundbar with Camera (6511283)	✓	✓
1	Power supply (2045873) with cord (2042043)		
1	Cable, USB 3.0, A - B, 6 ft (1.8 m) (2053077)		
	Mounting hardware		
	UC Presentation Transmitter with Cable Organizer		

Qty.	Description	UC-BX30-Z	UC-BX30-Z-WM
1	Presentation transmitter (6510936)	✓	✓
1	Cable Organizer		
1	Power pack (2056363) with cord (2001134)		
1	Bracket, power supply (2056257)		
1	Cable, USB to USB, 6.56 ft (2 m) (2056116)		
1	Cable, HDMI®, 6.56 ft (2 m) (2056117)		
1	Cable, USB 2.0, A to Micro B, 6.56 ft (2 m) (2055504)		
8	Screw, 10-9 x 5/8 in. (15.9 mm), Pan Head, Phillips, Black (2054365)		
	Additional Items		
1	Cable, CAT6a, RJ-45 - RJ-45, 20 ft (6.1 m) (6507640)	✓	✓
3	Cable, CAT5e, RJ-45 - RJ-45, 7 ft (2.1 m) (6509924)	✓	✓
1	Cable, HDMI 2.1, 6 ft (1.8 m) (6512150)	✓	✓
1	Cable, DisplayPort™ to HDMI, 6 ft (1.8 m) (6508282)	✓	✓

Mount Devices

Mount the UC Bracket Assembly

Mount the UC Bracket Assembly to VESA® compliant display devices, a wall, or other building structure. Anchors and screws are supplied for installation on walls with 3/8 in. (9.5 mm) to 3/4 in. (19 mm) thickness.

CAUTION: Preinstalled screws may protrude from the back of the UC Bracket Assembly. Exercise caution when handling the UC Bracket Assembly to avoid scratching or damaging surfaces.

NOTE: The integrated cable tie wraps are reusable. Avoid damaging the cable tie wraps.

Mount the UC Presentation Transmitter

Mount the UC Presentation Transmitter to the underside of a table using the supplied screws. The supplied screws support installation on tables with a thickness of 1 in. (25.4 mm) minimum.

Mount the Cable Organizer for the UC-PR

Mount the Cable Organizer according to the Cable Organizer for the UC-PR (Doc. 8966).

Mount the Soundbar with Camera

Mount the included smart soundbar with camera according to the UC-SB1-CAM-FLEX Quick Start (Doc. 8606).

Mount the Wall-Mount Touch Screen

Mount the included wall-mount touch screen according to the TSW-1070 Product Manual (Doc. 8550).

System Overview

When connections are complete, the system appears as shown below. The laptop connections shown below may vary based on the selected connection method. Refer to Make Connections on page 404 for detailed connection instructions.

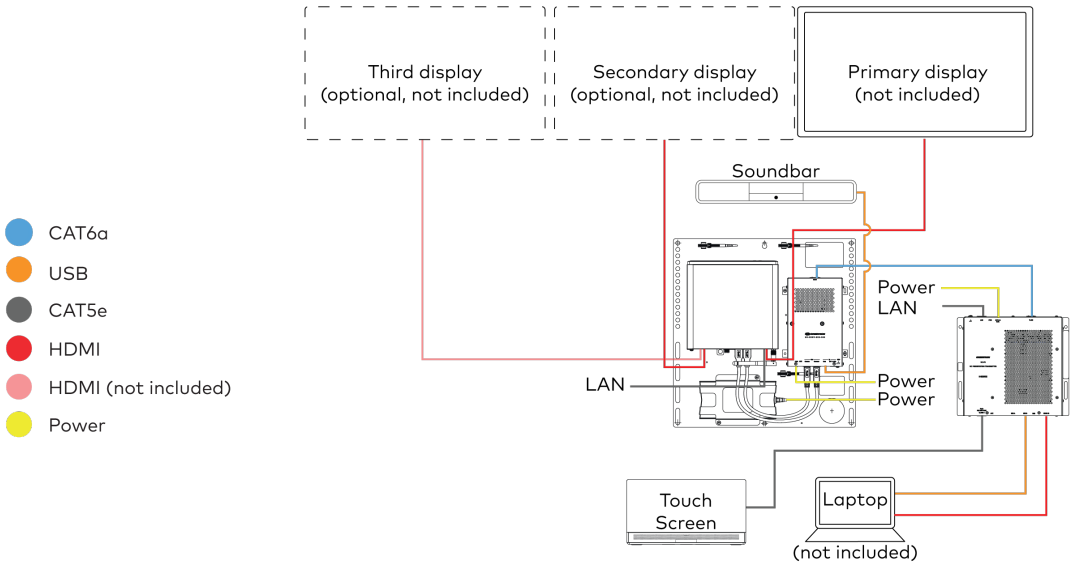

Make Connections

1. Make UC Engine connections as shown in the following illustration.

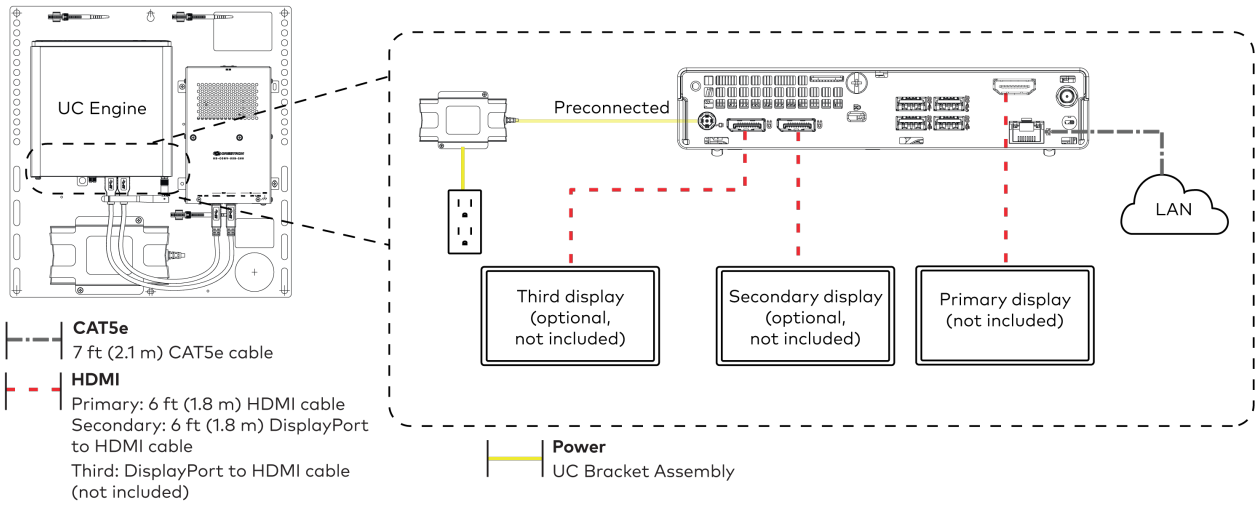

2. Connect the power supply and the soundbar to the bottom of the content ingest device (HD-CONV-USB-260). Connect the power supplies to an AC power outlet.

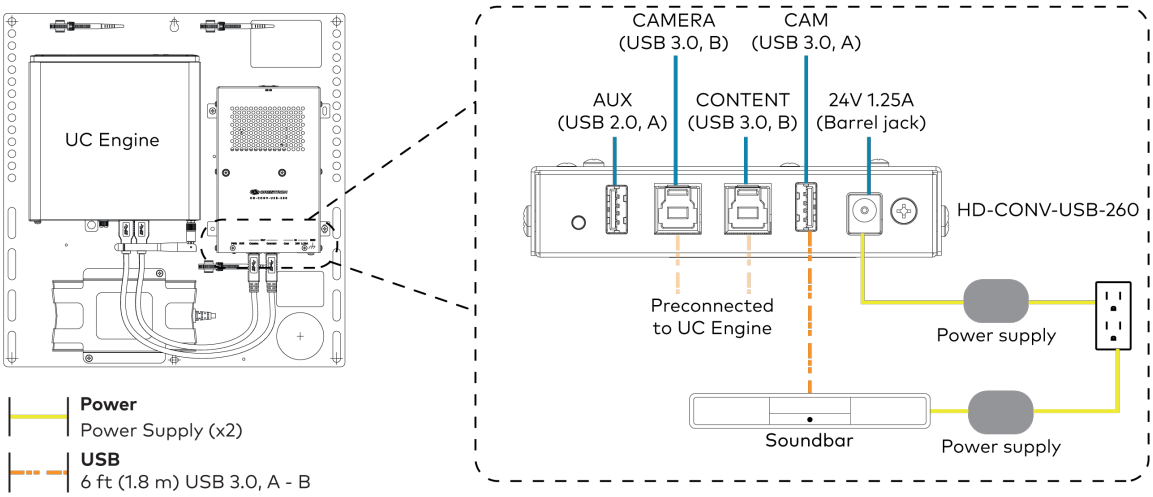

3. Connect power, the content ingest device (HD-CONV-USB-260), and LAN to the top of the UC Presentation Transmitter.

NOTE: If a longer cable between the UC Presentation Transmitter and the HD-CONV-USB-260 is needed, use a DigitalMedia™ Ultra cable only. The maximum supported cable length is 300 ft (91.4 m).

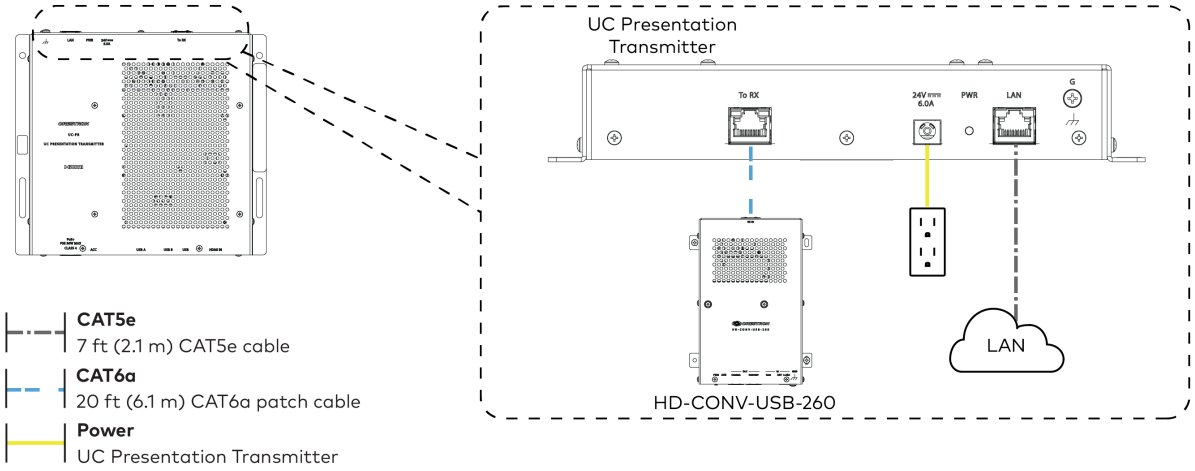

4. Connect the touch screen to the bottom of the UC Presentation Transmitter.

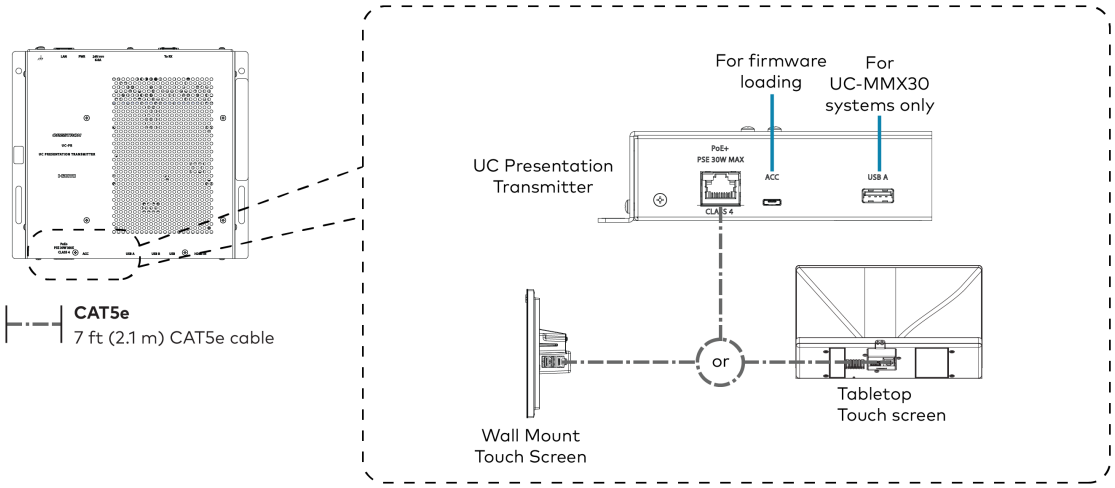

5. Connect a laptop to either the USB port or both the HDMI and USB B ports on the bottom of the UC Presentation Transmitter. Select a connection type based on the available ports on the user's laptop.

> **NOTE:** If the USB port is used along with either the HDMI or USB B port, the UC Presentation Transmitter will communicate via the USB port by default.

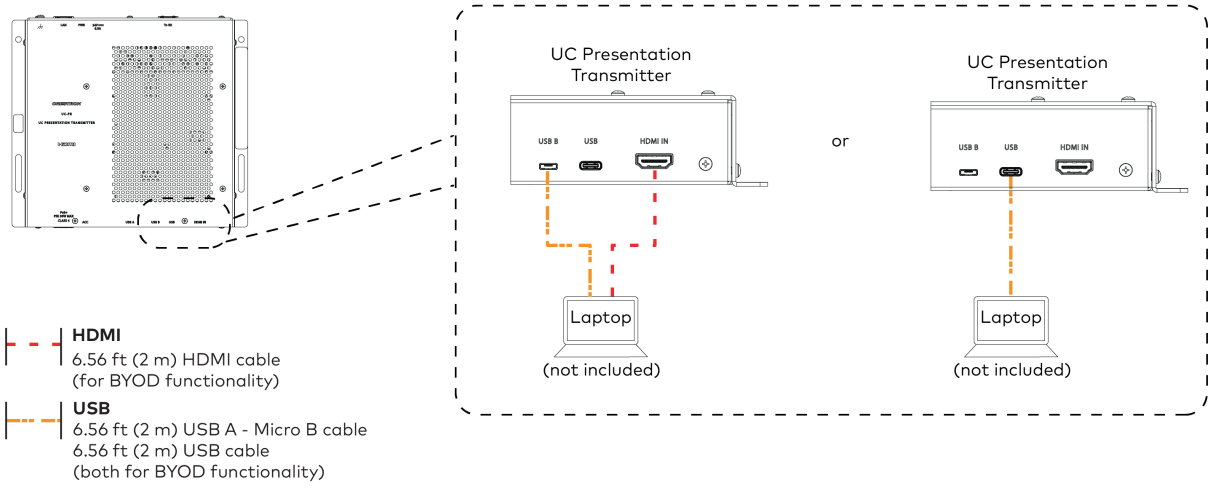

6. Bundle the cables to the bracket assembly with the integrated cable tie wraps. The cable tie wraps are reusable.

Apply Power

Press the power button on the bottom of the UC Engine and apply power to all of the other devices in the system. The connected display device will show a pairing code.

Log In to the Zoom Rooms Service

1. Tap **Touch Here to Enable a Specific Application** on the bottom of the screen. A list of applications is displayed.
2. Tap **Zoom Rooms** and then tap **Confirm**. The touch screen will reboot.
3. Enter the pairing code shown on the display to pair the touch screen with the UC Engine. The Zoom Rooms controller app is displayed.
4. Log in to the Zoom Rooms service with an activation code or Zoom Rooms Credentials (email and password).
    - **Activation Code:**
        a. Tap **Enter Activation Code**.
        b. Enter the 16-digit activation code provided by the administrator to activate the Zoom Room that is assigned to the activation code. The Zoom Rooms Conference Room screen is shown on the display.
    - **Sign In:**
        a. Tap **Sign In**.
        b. Enter the Zoom Room credentials and tap **Sign In**.
        c. Select the conference room name from the list and tap **Next**. The Zoom Rooms Conference Room screen is shown on the display.
5. Tap **Settings**. If a password is required, enter the password (the default password is "1234"). The **Settings** screen is displayed.
6. Tap **Microphone** and select the soundbar as the source.
7. Tap **Speaker** and select the soundbar as the source.
8. Tap **Meet Now** to exit.

Configure the System

Connect a USB keyboard and mouse (sold separately) to a USB port on the UC Engine to configure system features, as described in Configuration on page 553. For detailed information on using Zoom Rooms, refer to the Zoom Rooms Help Center.

UC-B31-Z and UC-B31-Z-WM

Minimum Requirements

Ensure that the below requirements are met prior to setting up the system.

- A video display (not included) connected to the UC Engine. A second or third display is optional.
- A Zoom Rooms account or activation code (not included).

> **NOTE:** Unless otherwise indicated in this section, the connection procedure is the same for UC-B31-Z and UC-B31-Z-WM.

In The Box

Qty.	Description	UC-B31-Z (-INDIA)	UC-B31-Z-WM(-INDIA)
	Tabletop Touch Screen		
1	10.1 in. Tabletop Touch Screen (6510821)	✓	✗
1	Grommet, Cable, Closed (2055455)		
1	Grommet, Cable, Open (2055456)		
1	Cover, Cable compartment (2055457)		
	Wall Mount Touch Screen		
1	10.1 in. Wall Mount Touch Screen (6510814)	✗	✓
	Mounting hardware		
	UC Bracket Assembly		
1	UC Bracket Assembly with UC Engine and HDMI content ingest (UC-BRKT-200-S-Z-ASSY, 6512690)	✓	✓
2	Anchor, Drywall, Plastic, 3/8 in. x 1/2 in. (9.5 mm x 12.7 mm) (2052565)		
1	Key, Anchor (4529654)		
2	Screw, 8-AB x 1-1/2 in. (38.1 mm), Pan Head, Combo (2052567)		
4	Tie Wrap (2047935)		
	Jabra® PanaCast® 50 Video Bar		
1	Jabra PanaCast 50 video bar for Crestron Flex systems (6513114) or Jabra PanaCast 50 video bar for Crestron Flex systems, India (6512698)	✓	✓
	Additional Items		
1	PoE injector (6502429)	✓	✓
2	Cable, CAT5e, RJ-45 - RJ-45, 7 ft (2.1 m) (6509924)	✓	✓
1	Cable, HDMI 2.1, 6 ft (1.8 m) (6512150)	✓	✓
1	Cable, HDMI, 20 ft (6.1 m) (6503567)	✓	✓
1	Cable, DisplayPort™ to HDMI, 6 ft (1.8 m) (6508282)	✓	✓

Mount Devices

Mount the UC Bracket Assembly

Mount the UC Bracket Assembly to VESA® compliant display devices, a wall, or other building structure. Anchors and screws are supplied for installation on walls with 3/8 in. (9.5 mm) to 3/4 in. (19 mm) thickness.

CAUTION: Preinstalled screws may protrude from the back of the UC Bracket Assembly. Exercise caution when handling the UC Bracket Assembly to avoid scratching or damaging surfaces.

NOTE: The integrated cable tie wraps are reusable. Avoid damaging the cable tie wraps.

Mount the Soundbar with Camera

Mount the included soundbar with camera according to its included documentation.

Mount the Wall-Mount Touch Screen

Mount the included wall-mount touch screen according to the TSW-1070 Product Manual (Doc. 8550).

Identify the UC Bracket Assembly

The UC Bracket Assembly is available in two models. Identify the model included with your Crestron Flex system. Tap or click the corresponding image below to navigate to the appropriate connection instructions.

UC Bracket Assembly with HD-CONV-USB-200

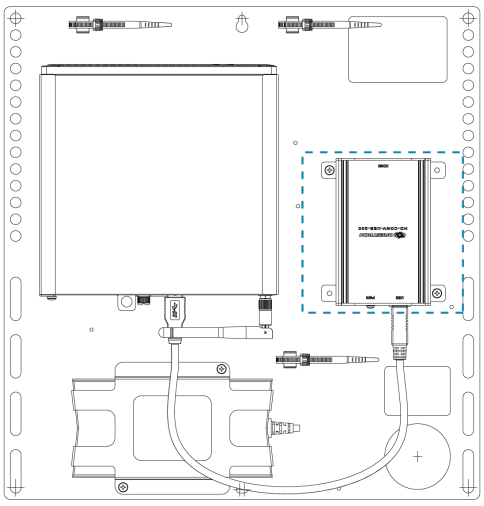

UC Bracket Assembly with HD-CONV-USB-300

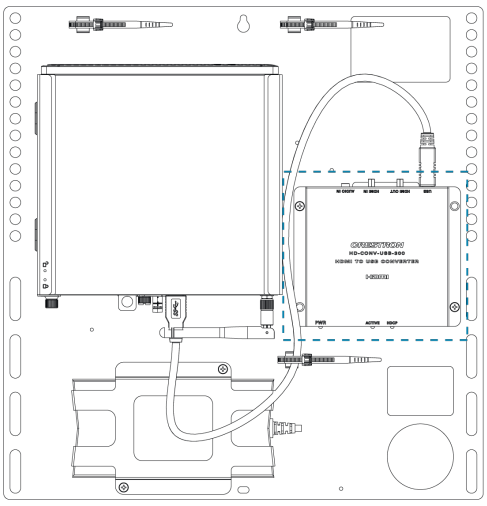

System Overview

For UC Bracket Assembly with HD-CONV-USB-200

When connections are complete, the system appears as shown below. Refer to Make Connections on page 412 for detailed connection instructions.

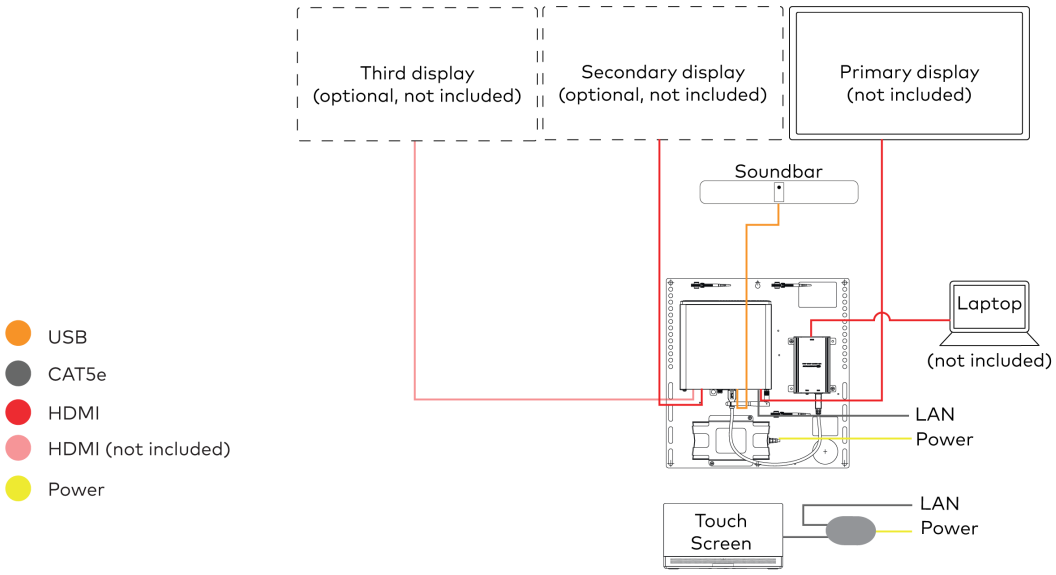

For UC Bracket Assembly with HD-CONV-USB-300

When connections are complete, the system appears as shown below. Refer to Make Connections on page 412 for detailed connection instructions.

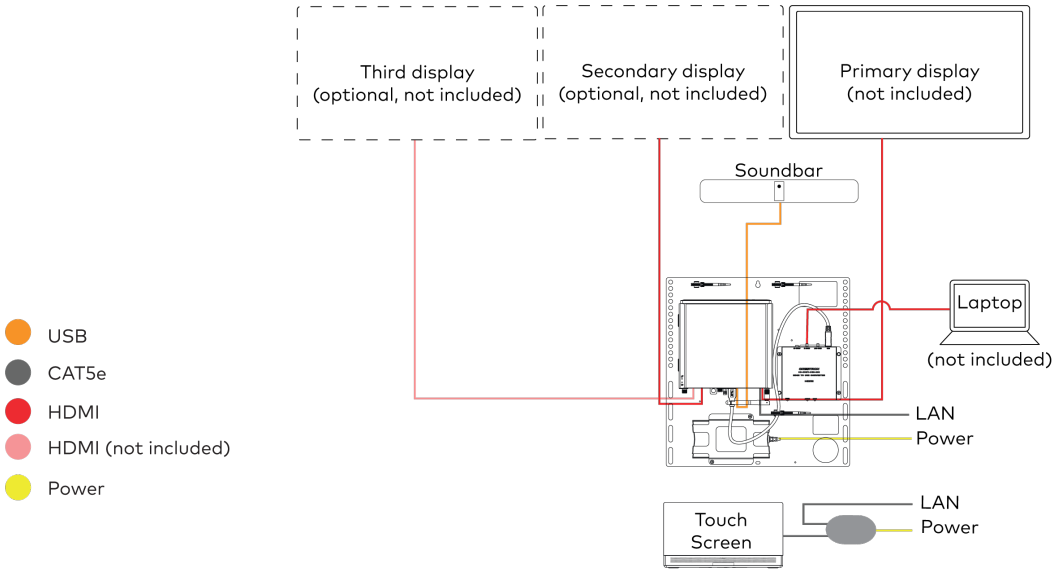

Make Connections

NOTE: For reference, the UC Bracket Assembly is shown with the HD-CONV-USB-200 in the following connection diagrams. Unless otherwise indicated in this guide, the connections remain the same for the UC Bracket Assembly with HD-CONV-USB-200 and HD-CONV-USB-300.

1. Make UC Engine and touch screen connections as shown in the following illustration.

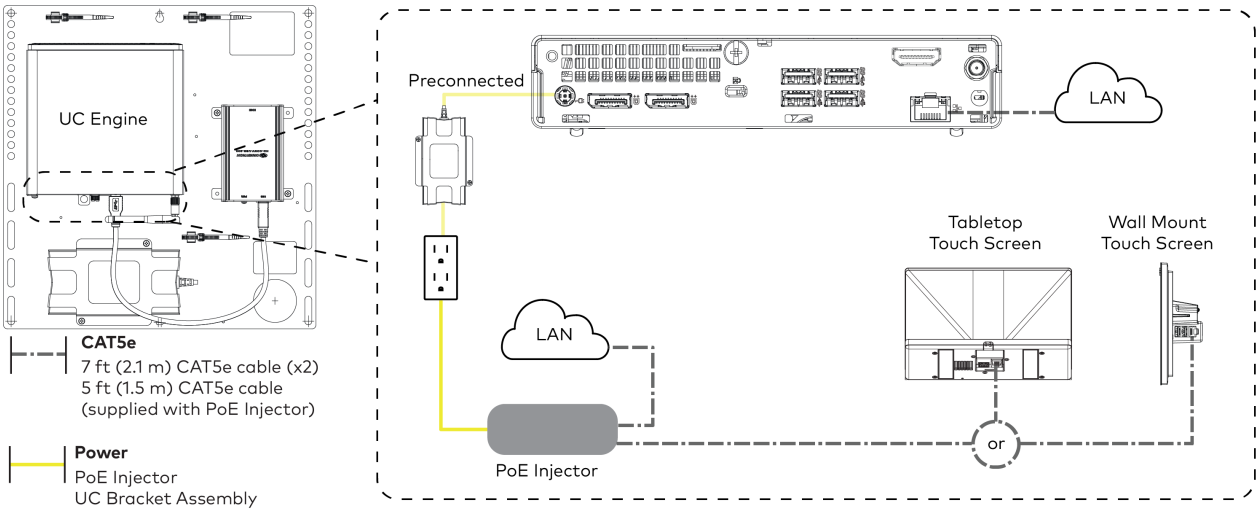

2. Connect displays to the UC Engine.

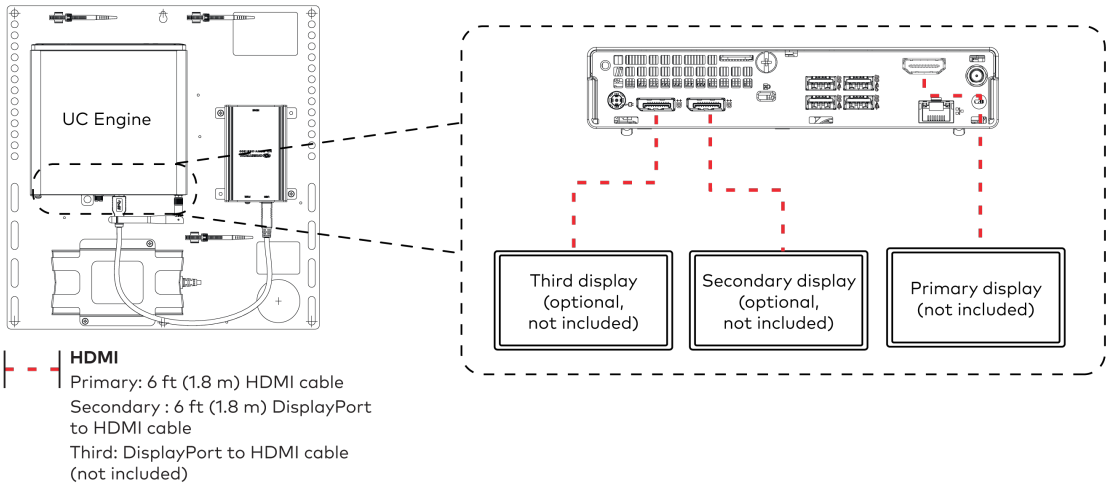

3. Connect the soundbar to the UC Engine as shown in the image below. Do not connect the soundbar to any of the other USB ports.

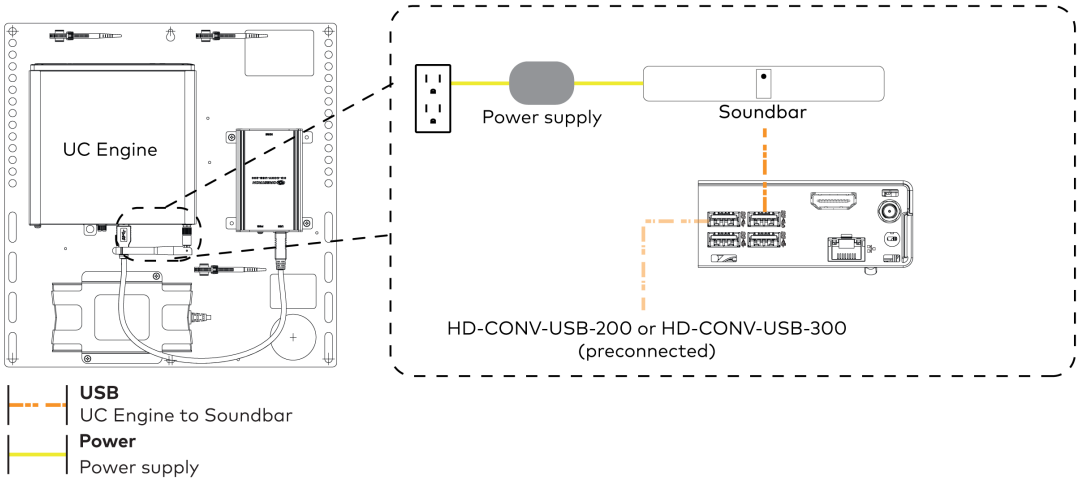

4. Connect a laptop to the HD-CONV-USB-200 or HD-CONV-USB-300.

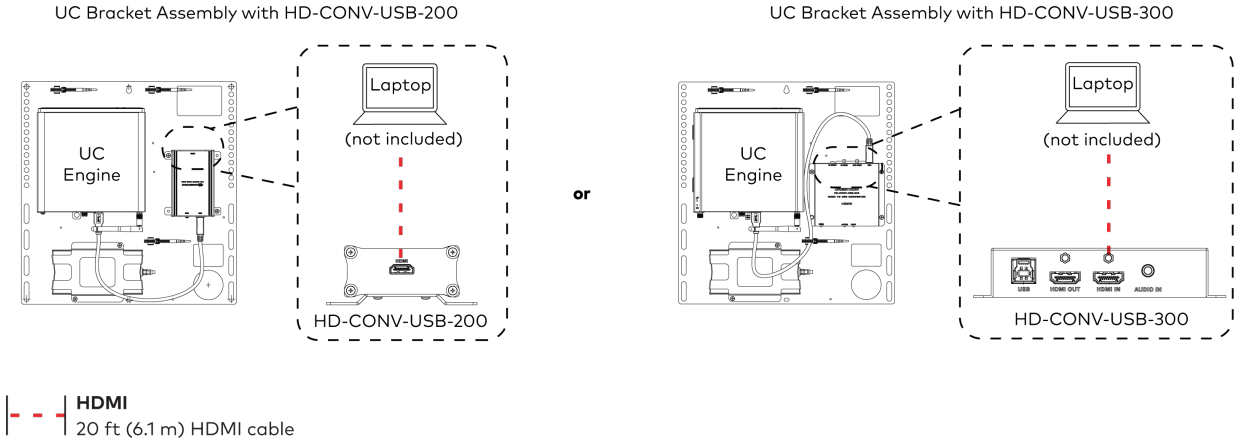

5. Bundle the cables to the bracket assembly with the integrated cable tie wraps. The cable tie wraps are reusable.

Apply Power

Press the power button on the bottom of the UC Engine and apply power to all of the other devices in the system.

Log In to the Zoom Rooms Service

1. Tap **Touch Here to Enable a Specific Application** on the bottom of the screen. A list of applications is displayed.
2. Tap **Zoom Rooms** and then tap **Confirm**. The touch screen will reboot.
3. Enter the pairing code shown on the display to pair the touch screen with the UC Engine. The Zoom Rooms controller app is displayed.

4. Log in to the Zoom Rooms service with an activation code or Zoom Rooms Credentials (email and password).
    - **Activation Code:**
        a. Tap **Enter Activation Code**.
        b. Enter the 16-digit activation code provided by the administrator to activate the Zoom Room that is assigned to the activation code. The Zoom Rooms Conference Room screen is shown on the display.
    - **Sign In:**
        a. Tap **Sign In**.
        b. Enter the Zoom Room credentials and tap **Sign In**.
        c. Select the conference room name from the list and tap **Next**. The Zoom Rooms Conference Room screen is shown on the display.
5. Tap **Settings**. If a password is required, enter the password (the default password is "1234"). The **Settings** screen is displayed.
6. Tap **Microphone** and select the as the source.
7. Tap **Speaker** and select the as the source.
8. Tap **Meet Now** to exit.

Configure the System

Connect a USB keyboard and mouse (sold separately) to a USB port on the UC Engine to configure system features, as described in Configuration on page 553. For detailed information on using Zoom Rooms, refer to the Zoom Rooms Help Center.

UC-BX31-Z and UC-BX31-Z-WM

Minimum Requirements

Ensure that the below requirements are met prior to setting up the system.

- A video display (not included) connected to the UC Engine. A second or third display is optional.
- A Zoom Rooms account or activation code (not included).

> **NOTE:** Unless otherwise indicated in this section, the connection procedure is the same for UC-BX31-Z and UC-BX31-Z-WM.

In The Box

Qty.	Description	UC-BX31-Z(-INDIA)	UC-BX31-Z-WM(-INDIA)
	Tabletop Touch Screen		
1	10.1 in. Tabletop Touch Screen (6510821)	✓	✗
1	Grommet, Cable, Closed (2055455)		
1	Grommet, Cable, Open (2055456)		
1	Cover, Cable compartment (2055457)		
	Wall Mount Touch Screen		
1	10.1 in. Wall Mount Touch Screen (6510814)	✗	✓
	Mounting hardware		
	UC Bracket Assembly		
1	UC Bracket Assembly with UC Engine and HDMI or AV over CAT5 content ingest (UC-BRKT-260-P-Z-ASSY, 6512692)	✓	✓
1	Power pack (2045870)		
2	Anchor, Drywall, Plastic, 3/8 in. x 1/2 in. (9.5 mm x 12.7 mm) (2052565)		
1	Key, Anchor (4529654)		
2	Screw, 8-AB x 1-1/2 in. (38.1 mm), Pan Head, Combo (2052567)		
4	Tie Wrap (2047935)		
	Jabra® PanaCast® 50 Video Bar		
1	Jabra PanaCast 50 video bar for Crestron Flex systems (6513114) or Jabra PanaCast 50 video bar for Crestron Flex systems, India (6512698)	✓	✓
	UC Presentation Transmitter with Cable Organizer		

Qty.	Description	UC-BX31-Z(-INDIA)	UC-BX31-Z-WM(-INDIA)
1	Presentation transmitter (6510936)	✓	✓
1	Cable Organizer		
1	Power pack (2056363) with cord (2001134)		
1	Bracket, power supply (2056257)		
1	Cable, USB to USB, 6.56 ft (2 m) (2056116)		
1	Cable, HDMI®, 6.56 ft (2 m) (2056117)		
1	Cable, USB 2.0, A to Micro B, 6.56 ft (2 m) (2055504)		
8	Screw, 10-9 x 5/8 in. (15.9 mm), Pan Head, Phillips, Black (2054365)		
	Additional Items		
1	Cable, CAT6a, RJ-45 - RJ-45, 20 ft (6.1 m) (6507640)	✓	✓
3	Cable, CAT5e, RJ-45 - RJ-45, 7 ft (2.1 m) (6509924)	✓	✓
1	Cable, HDMI 2.1, 6 ft (1.8 m) (6512150)	✓	✓
1	Cable, DisplayPort™ to HDMI, 6 ft (1.8 m) (6508282)	✓	✓

Mount Devices

Mount the UC Bracket Assembly

Mount the UC Bracket Assembly to VESA® compliant display devices, a wall, or other building structure. Anchors and screws are supplied for installation on walls with 3/8 in. (9.5 mm) to 3/4 in. (19 mm) thickness.

CAUTION: Preinstalled screws may protrude from the back of the UC Bracket Assembly. Exercise caution when handling the UC Bracket Assembly to avoid scratching or damaging surfaces.

NOTE: The integrated cable tie wraps are reusable. Avoid damaging the cable tie wraps.

Mount the UC Presentation Transmitter

Mount the UC Presentation Transmitter to the underside of a table using the supplied screws. The supplied screws support installation on tables with a thickness of 1 in. (25.4 mm) minimum.

Mount the Cable Organizer for the UC-PR

Mount the Cable Organizer according to the Cable Organizer for the UC-PR (Doc. 8966).

Mount the Soundbar with Camera

Mount the included soundbar with camera according to its included documentation.

Mount the Wall-Mount Touch Screen

Mount the included wall-mount touch screen according to the TSW-1070 Product Manual (Doc. 8550).

System Overview

When connections are complete, the system appears as shown below. The laptop connections shown below may vary based on the selected connection method. Refer to Make Connections on page 418 for detailed connection instructions.

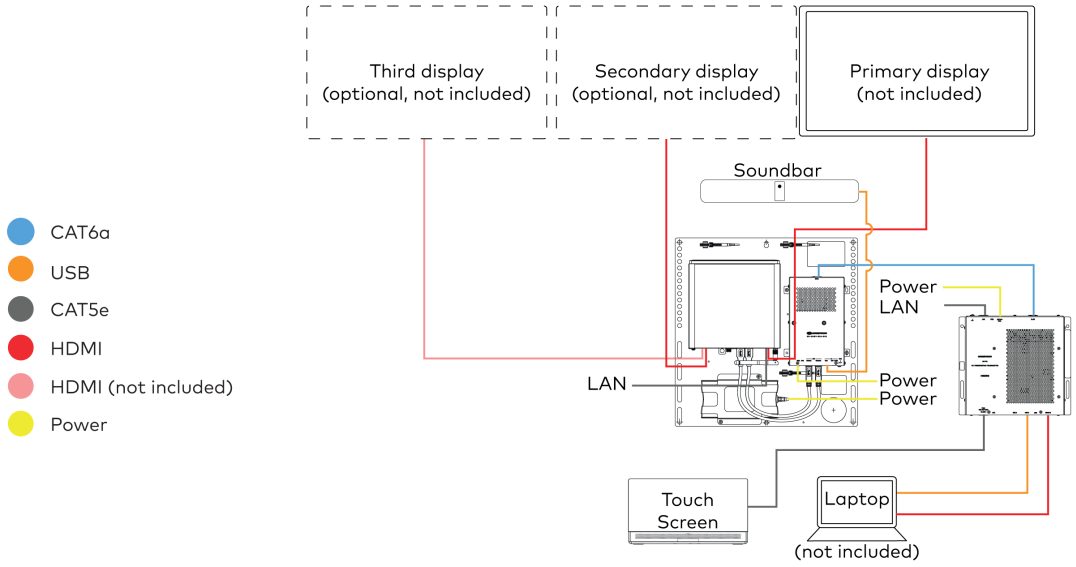

Make Connections

1. Make UC Engine connections as shown in the following illustration.

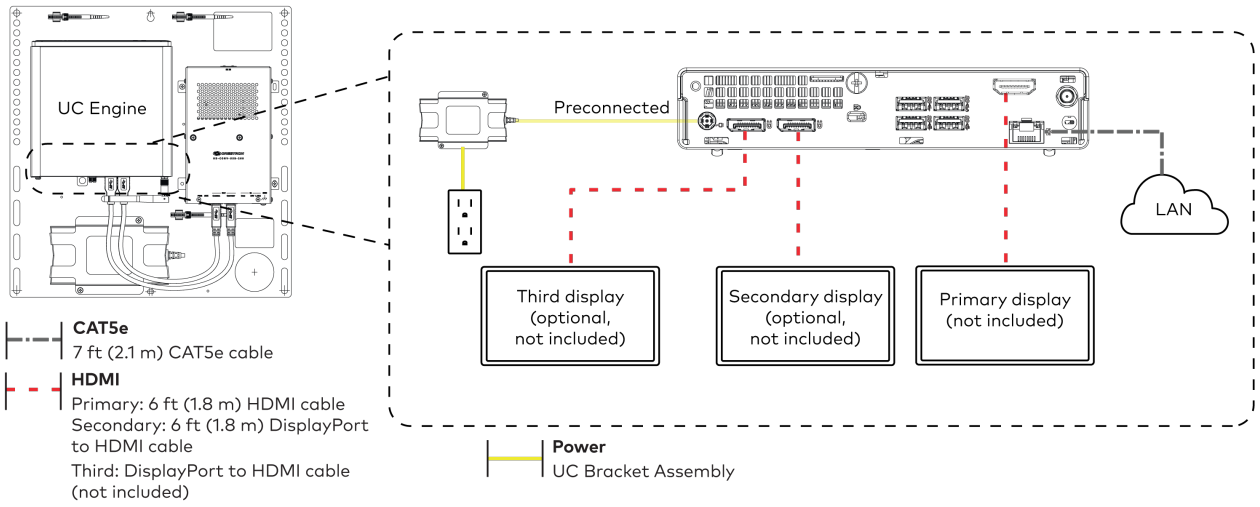

2. Connect the to the bottom of the content ingest device . Connect the power to an AC power outlet.

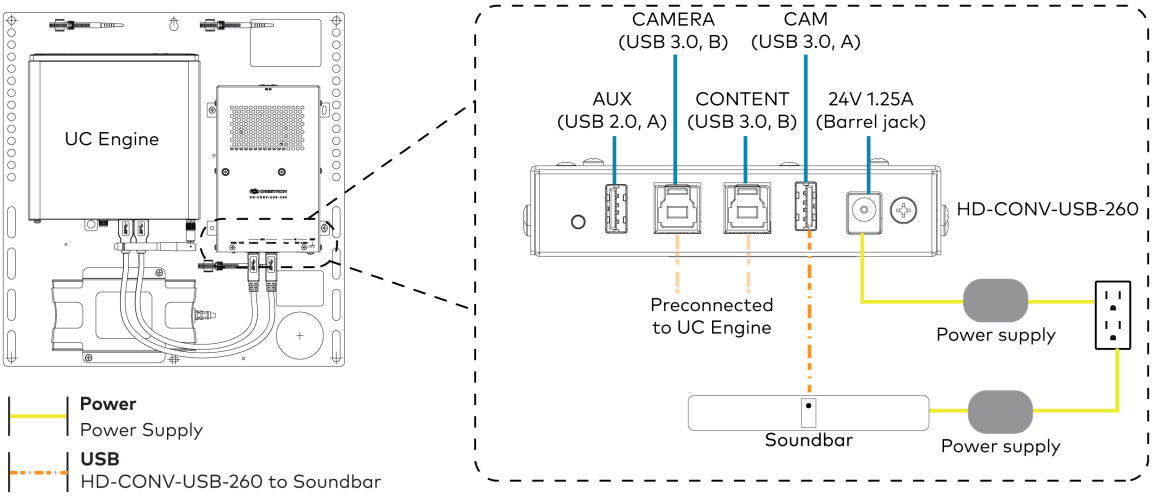

3. Connect power, the content ingest device (HD-CONV-USB-260), and LAN to the top of the UC Presentation Transmitter.

NOTE: If a longer cable between the UC Presentation Transmitter and the HD-CONV-USB-260 is needed, use a DigitalMedia™ Ultra cable only. The maximum supported cable length is 300 ft (91.4 m).

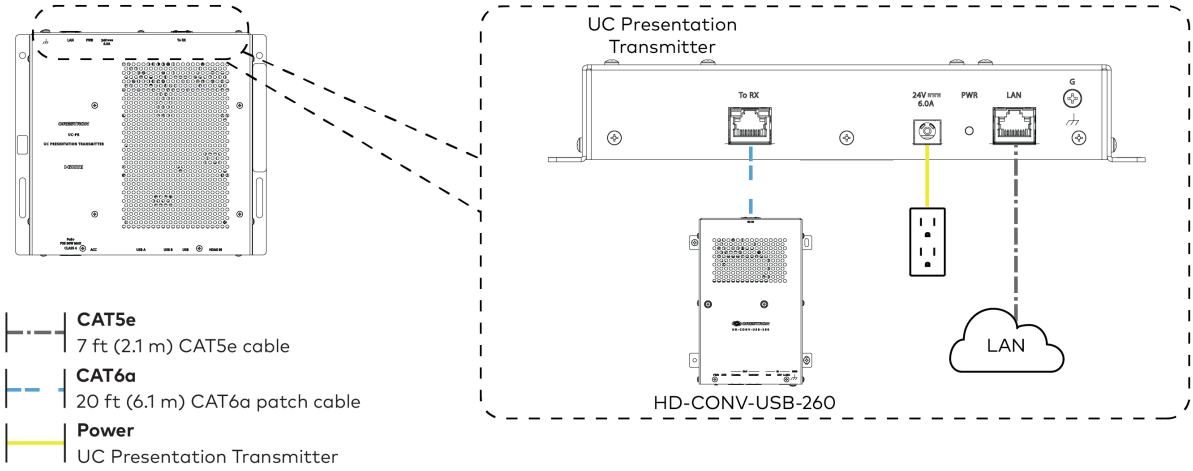

4. Connect the touch screen to the bottom of the UC Presentation Transmitter.

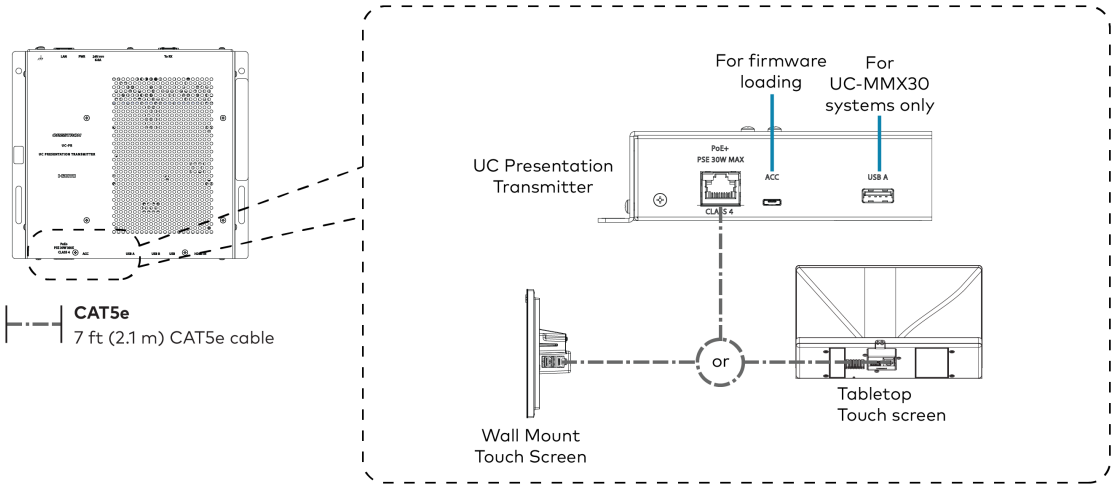

5. Connect a laptop to either the USB port or both the HDMI and USB B ports on the bottom of the UC Presentation Transmitter. Select a connection type based on the available ports on the user's laptop.

> **NOTE:** If the USB port is used along with either the HDMI or USB B port, the UC Presentation Transmitter will communicate via the USB port by default.

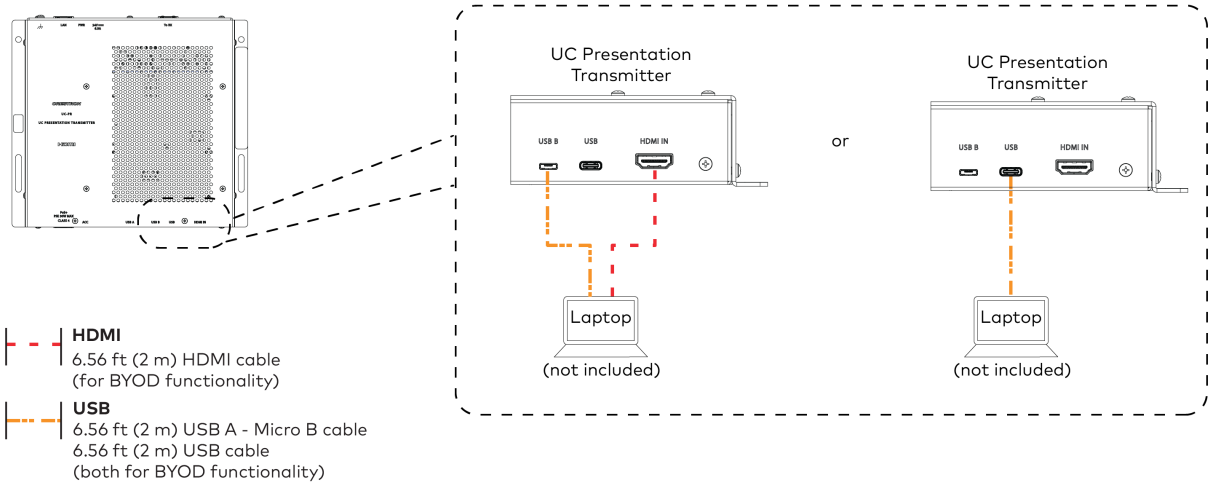

6. Bundle the cables to the bracket assembly with the integrated cable tie wraps. The cable tie wraps are reusable.

Apply Power

Press the power button on the bottom of the UC Engine and apply power to all of the other devices in the system.

Log In to the Zoom Rooms Service

1. Tap **Touch Here to Enable a Specific Application** on the bottom of the screen. A list of applications is displayed.
2. Tap **Zoom Rooms** and then tap **Confirm**. The touch screen will reboot.
3. Enter the pairing code shown on the display to pair the touch screen with the UC Engine. The Zoom Rooms controller app is displayed.
4. Log in to the Zoom Rooms service with an activation code or Zoom Rooms Credentials (email and password).
    - **Activation Code:**
        a. Tap **Enter Activation Code**.
        b. Enter the 16-digit activation code provided by the administrator to activate the Zoom Room that is assigned to the activation code. The Zoom Rooms Conference Room screen is shown on the display.
    - **Sign In:**
        a. Tap **Sign In**.
        b. Enter the Zoom Room credentials and tap **Sign In**.
        c. Select the conference room name from the list and tap **Next**. The Zoom Rooms Conference Room screen is shown on the display.
5. Tap **Settings**. If a password is required, enter the password (the default password is "1234"). The **Settings** screen is displayed.
6. Tap **Microphone** and select the as the source.
7. Tap **Speaker** and select the as the source.
8. Tap **Meet Now** to exit.

Configure the System

Connect a USB keyboard and mouse (sold separately) to a USB port on the UC Engine to configure system features, as described in Configuration on page 553. For detailed information on using Zoom Rooms, refer to the Zoom Rooms Help Center.

UC-C100-Z and UC-C100-Z-WM

Minimum Requirements

Ensure that the below requirements are met prior to setting up the system.

- A certified USB Camera (not included). Crestron 1 Beyond cameras IV-CAMHK-12-SLVR-1B, IV-CAM-P12 and IV-CAM-P20 are recommended.
- A certified, AEC-enabled USB speakerphone or DSP device (not included). Refer to Zoom Rooms Certified Hardware for more information.
- A video display (not included) connected to the UC Engine. A second or third display is optional.
- A Zoom Rooms account or activation code (not included).

> **NOTE:** Unless otherwise indicated in this section, the connection procedure is the same for UC-C100-Z and UC-C100-Z-WM.

In The Box

Qty.	Description	UC-C100-Z	UC-C100-Z-WM
	Tabletop Touch Screen		
1	10.1 in. Tabletop Touch Screen (6510821)	✓	✗
1	Grommet, Cable, Closed (2055455)		
1	Grommet, Cable, Open (2055456)		
1	Cover, Cable compartment (2055457)		
	Wall Mount Touch Screen		
1	10.1 in. Wall Mount Touch Screen (6510814)	✗	✓
	Mounting hardware		
	UC Bracket Assembly		
1	UC Bracket Assembly with UC Engine and HDMI content ingest (UC-BRKT-200-S-Z-ASSY, 6512690)	✓	✓
2	Anchor, Drywall, Plastic, 3/8 in. x 1/2 in. (9.5 mm x 12.7 mm) (2052565)		
1	Key, Anchor (4529654)		
2	Screw, 8-AB x 1-1/2 in. (38.1 mm), Pan Head, Combo (2052567)		
4	Tie Wrap (2047935)		
	Additional Items		
1	PoE injector (6502429)	✓	✓
2	Cable, CAT5e, RJ-45 - RJ-45, 7 ft (2.1 m) (6509924)	✓	✓
1	Cable, HDMI 2.1, 6 ft (1.8 m) (6512150)	✓	✓
1	Cable, HDMI, 20 ft (6.1 m) (6503567)	✓	✓
1	Cable, DisplayPort™ to HDMI, 6 ft (1.8 m) (6508282)	✓	✓

Mount Devices

Mount the UC Bracket Assembly

Mount the UC Bracket Assembly to VESA® compliant display devices, a wall, or other building structure. Anchors and screws are supplied for installation on walls with 3/8 in. (9.5 mm) to 3/4 in. (19 mm) thickness.

CAUTION: Preinstalled screws may protrude from the back of the UC Bracket Assembly. Exercise caution when handling the UC Bracket Assembly to avoid scratching or damaging surfaces.

NOTE: The integrated cable tie wraps are reusable. Avoid damaging the cable tie wraps.

Mount the Wall-Mount Touch Screen

Mount the included wall-mount touch screen according to the TSW-1070 Product Manual (Doc. 8550).

Identify the UC Bracket Assembly

The UC Bracket Assembly is available in two models. Identify the model included with your Crestron Flex system. Tap or click the corresponding image below to navigate to the appropriate connection instructions.

UC Bracket Assembly with HD-CONV-USB-200

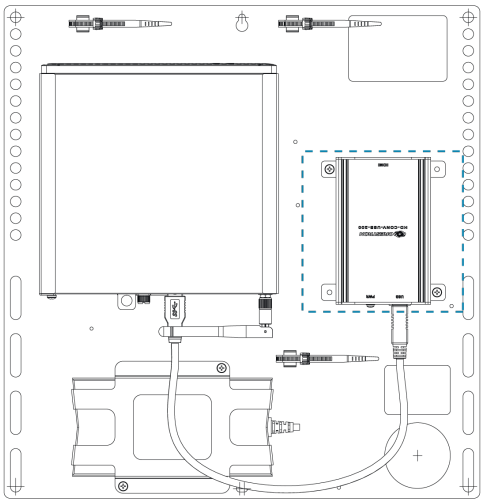

UC Bracket Assembly with HD-CONV-USB-300

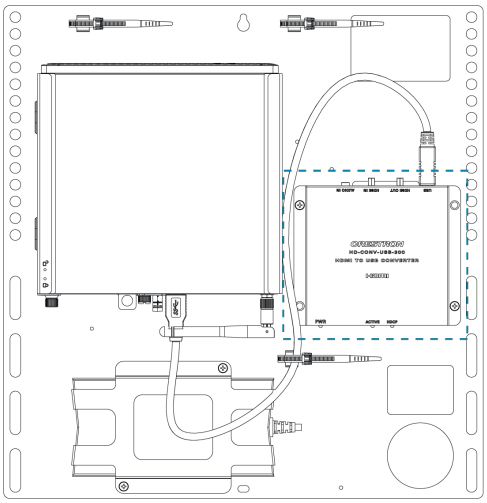

System Overview

For UC Bracket Assembly with HD-CONV-USB-200

When connections are complete, the system appears as shown below. Refer to Make Connections on page 425 for detailed connection instructions.

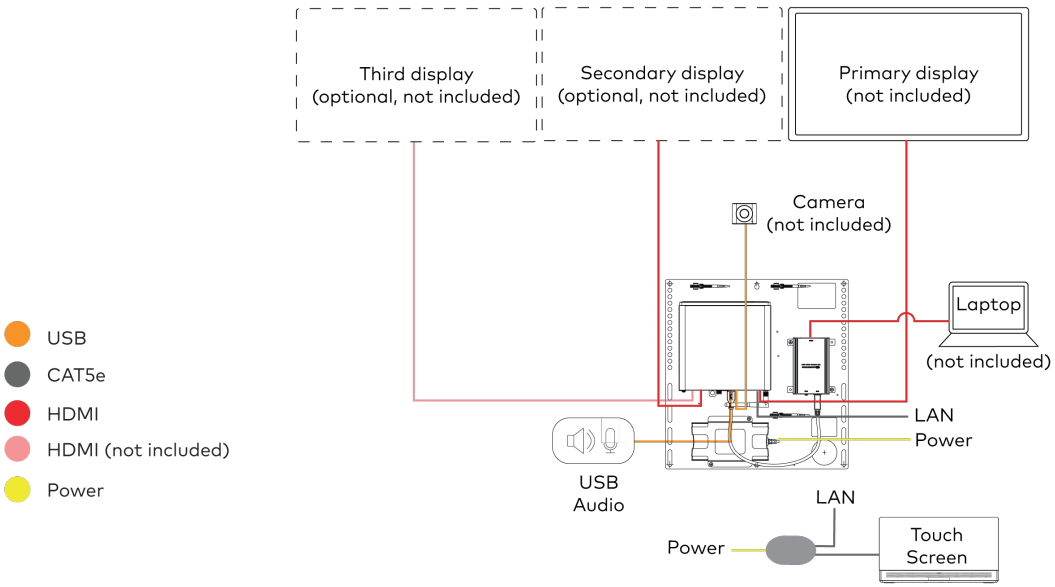

For UC Bracket Assembly with HD-CONV-USB-300

When connections are complete, the system appears as shown below. Refer to Make Connections on page 425 for detailed connection instructions.

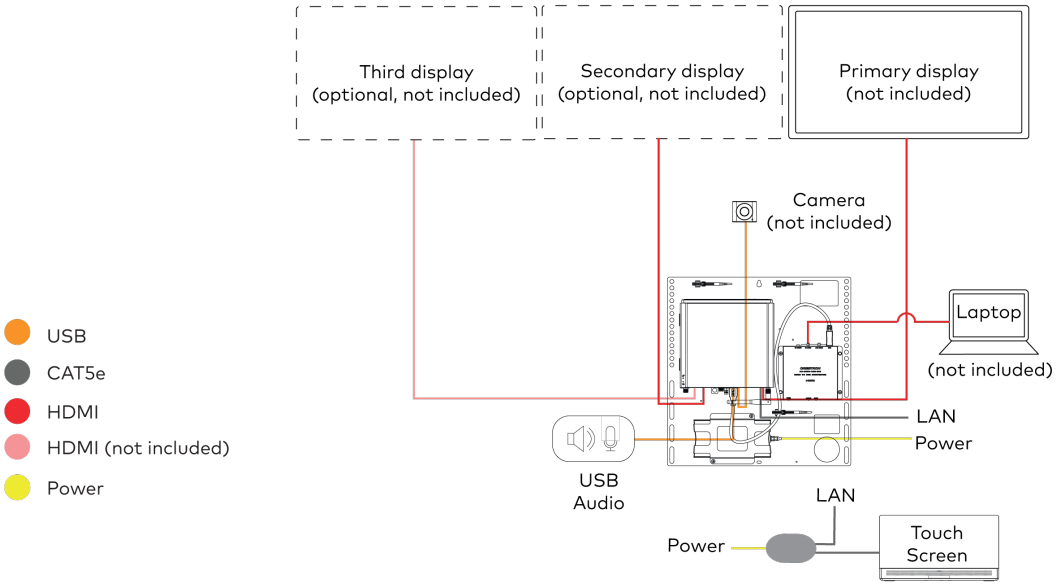

Make Connections

NOTE: For reference, the UC Bracket Assembly is shown with the HD-CONV-USB-200 in the following connection diagrams. Unless otherwise indicated in this guide, the connections remain the same for the UC Bracket Assembly with HD-CONV-USB-200 and HD-CONV-USB-300.

1. Make UC Engine and touch screen connections as shown in the following illustration.

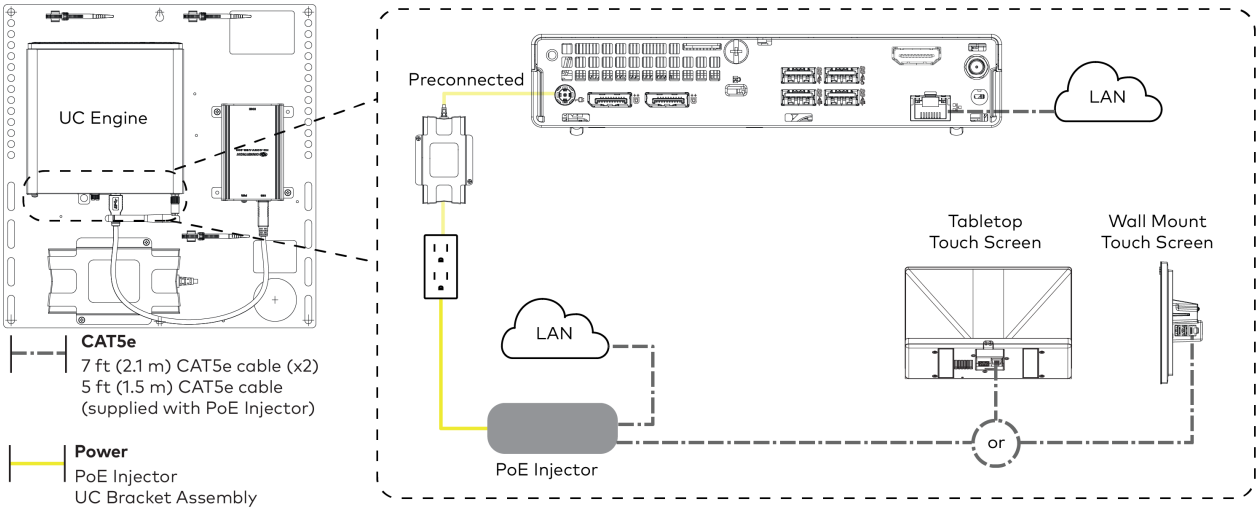

2. Connect a USB audio source (accessory, not included) and displays to the UC Engine.

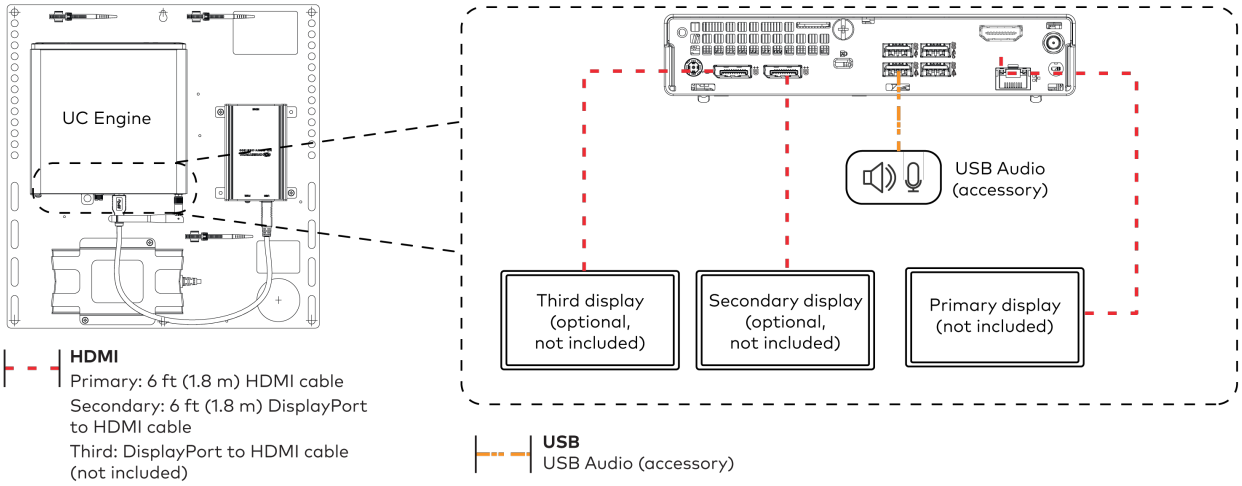

3. Connect a camera (not included) to the UC Engine as shown in the image below. Do not connect the camera to any of the other USB ports.

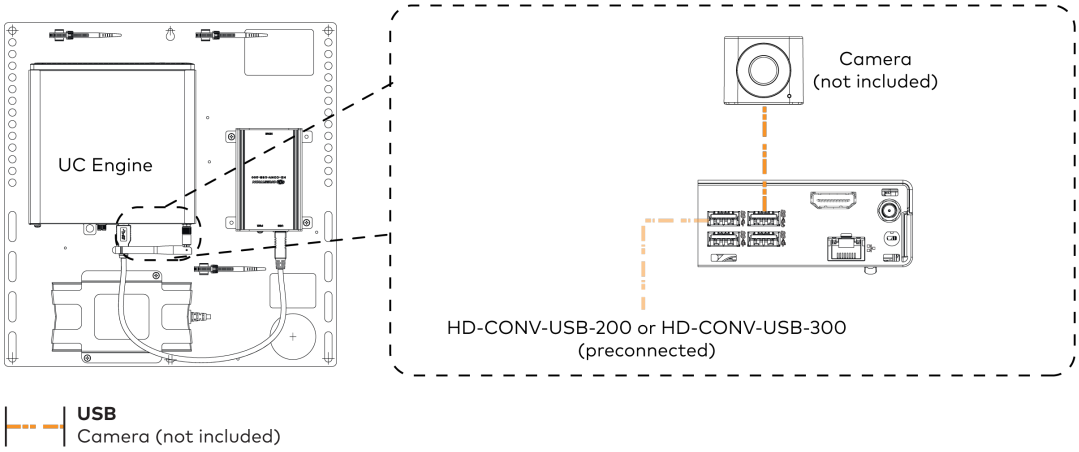

4. Connect a laptop to the HD-CONV-USB-200 or HD-CONV-USB-300.

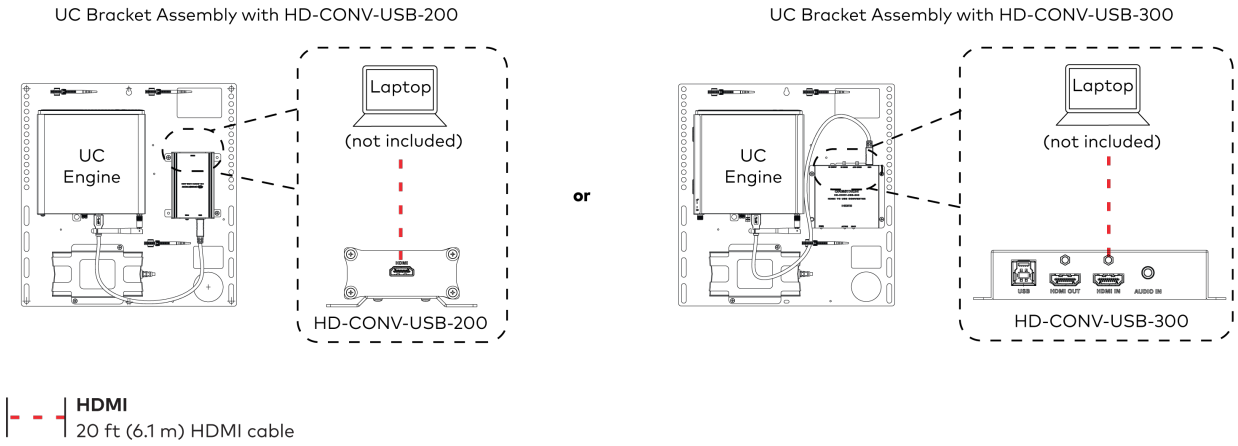

5. Bundle the cables to the bracket assembly with the integrated cable tie wraps. The cable tie wraps are reusable.

Apply Power

Press the power button on the bottom of the UC Engine and apply power to all of the other devices in the system. The connected display device will show a pairing code.

Log In to the Zoom Rooms Service

1. Tap **Touch Here to Enable a Specific Application** on the bottom of the screen. A list of applications is displayed.
2. Tap **Zoom Rooms** and then tap **Confirm**. The touch screen will reboot.
3. Enter the pairing code shown on the display to pair the touch screen with the UC Engine. The Zoom Rooms controller app is displayed.
4. Log in to the Zoom Rooms service with an activation code or Zoom Rooms Credentials (email and password).
   - **Activation Code:**
     a. Tap **Enter Activation Code**.
     b. Enter the 16-digit activation code provided by the administrator to activate the Zoom Room that is assigned to the activation code. The Zoom Rooms Conference Room screen is shown on the display.
   - **Sign In:**
     a. Tap **Sign In**.
     b. Enter the Zoom Room credentials and tap **Sign In**.
     c. Select the conference room name from the list and tap **Next**. The Zoom Rooms Conference Room screen is shown on the display.
5. Tap **Settings**. If a password is required, enter the password (the default password is "1234"). The **Settings** screen is displayed.

6. Tap **Microphone** and select the USB audio device as the source.
7. Tap **Speaker** and select the USB audio device as the source.
8. Tap **Meet Now** to exit.

Configure the System

Connect a USB keyboard and mouse (sold separately) to a USB port on the UC Engine to configure system features, as described in Configuration on page 553. For detailed information on using Zoom Rooms, refer to the Zoom Rooms Help Center.

UC-CX100-Z and UC-CX100-Z-WM

Minimum Requirements

Ensure that the below requirements are met prior to setting up the system.

- A certified USB Camera (not included). Crestron 1 Beyond cameras IV-CAMHK-12-SLVR-1B, IV-CAM-P12 and IV-CAM-P20 are recommended.
- A certified, AEC-enabled USB speakerphone or DSP device (not included). Refer to Zoom Rooms Certified Hardware for more information.
- A video display (not included) connected to the UC Engine. A second or third display is optional.
- A Zoom Rooms account or activation code (not included).

> **NOTE:** Unless otherwise indicated in this section, the connection procedure is the same for UC-CX100-Z and UC-CX100-Z-WM.

In The Box

Qty.	Description	UC-CX100-Z	UC-CX100-Z-WM
	Tabletop Touch Screen		
1	10.1 in. Tabletop Touch Screen (6510821)	✓	✗
1	Grommet, Cable, Closed (2055455)		
1	Grommet, Cable, Open (2055456)		
1	Cover, Cable compartment (2055457)		
	Wall Mount Touch Screen		
1	10.1 in. Wall Mount Touch Screen (6510814)	✗	✓
	Mounting hardware		
	UC Bracket Assembly		
1	UC Bracket Assembly with UC Engine and HDMI or AV over CAT5 content ingest (UC-BRKT-260-P-Z-ASSY, 6512692)	✓	✓
1	Power pack (2045870)		
2	Anchor, Drywall, Plastic, 3/8 in. x 1/2 in. (9.5 mm x 12.7 mm) (2052565)		
1	Key, Anchor (4529654)		
2	Screw, 8-AB x 1-1/2 in. (38.1 mm), Pan Head, Combo (2052567)		
4	Tie Wrap (2047935)		
	UC Presentation Transmitter with Cable Organizer		
1	Presentation transmitter (6510936)	✓	✓
1	Cable Organizer		
1	Power pack (2056363) with cord (2001134)		
1	Bracket, power supply (2056257)		
1	Cable, USB to USB, 6.56 ft (2 m) (2056116)		
1	Cable, HDMI®, 6.56 ft (2 m) (2056117)		
1	Cable, USB 2.0, A to Micro B, 6.56 ft (2 m) (2055504)		
8	Screw, 10-9 x 5/8 in. (15.9 mm), Pan Head, Phillips, Black (2054365)		
	Additional Items		
1	Cable, CAT6a, RJ-45 - RJ-45, 20 ft (6.1 m) (6507640)	✗	✗

Qty.	Description	UC-CX100-Z	UC-CX100-Z-WM
3	Cable, CAT5e, RJ-45 - RJ-45, 7 ft (2.1 m) (6509924)	✔	✔
1	Cable, HDMI 2.1, 6 ft (1.8 m) (6512150)	✔	✔
1	Cable, DisplayPort™ to HDMI, 6 ft (1.8 m) (6508282)	✔	✔

Mount Devices

Mount the UC Bracket Assembly

Mount the UC Bracket Assembly to VESA® compliant display devices, a wall, or other building structure. Anchors and screws are supplied for installation on walls with 3/8 in. (9.5 mm) to 3/4 in. (19 mm) thickness.

CAUTION: Preinstalled screws may protrude from the back of the UC Bracket Assembly. Exercise caution when handling the UC Bracket Assembly to avoid scratching or damaging surfaces.

NOTE: The integrated cable tie wraps are reusable. Avoid damaging the cable tie wraps.

Mount the UC Presentation Transmitter

Mount the UC Presentation Transmitter to the underside of a table using the supplied screws. The supplied screws support installation on tables with a thickness of 1 in. (25.4 mm) minimum.

Mount the Cable Organizer for the UC-PR

Mount the Cable Organizer according to the Cable Organizer for the UC-PR (Doc. 8966).

Mount the Wall-Mount Touch Screen

Mount the included wall-mount touch screen according to the TSW-1070 Product Manual (Doc. 8550).

System Overview

When connections are complete, the system appears as shown below. The laptop connections shown below may vary based on the selected connection method. Refer to Make Connections on page 432 for detailed connection instructions.

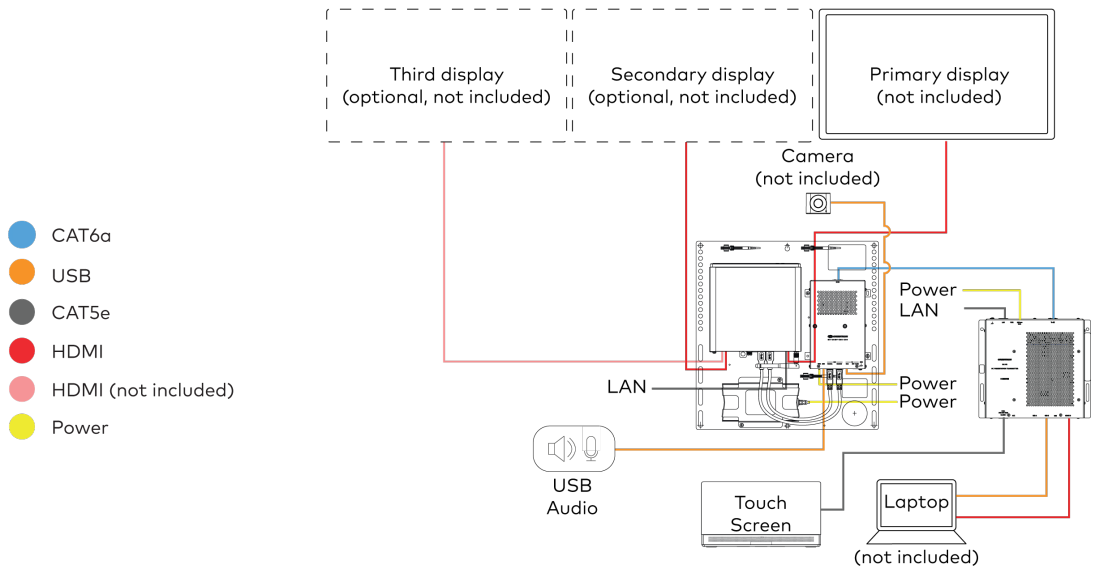

Make Connections

1. Make UC Engine connections as shown in the following illustration.

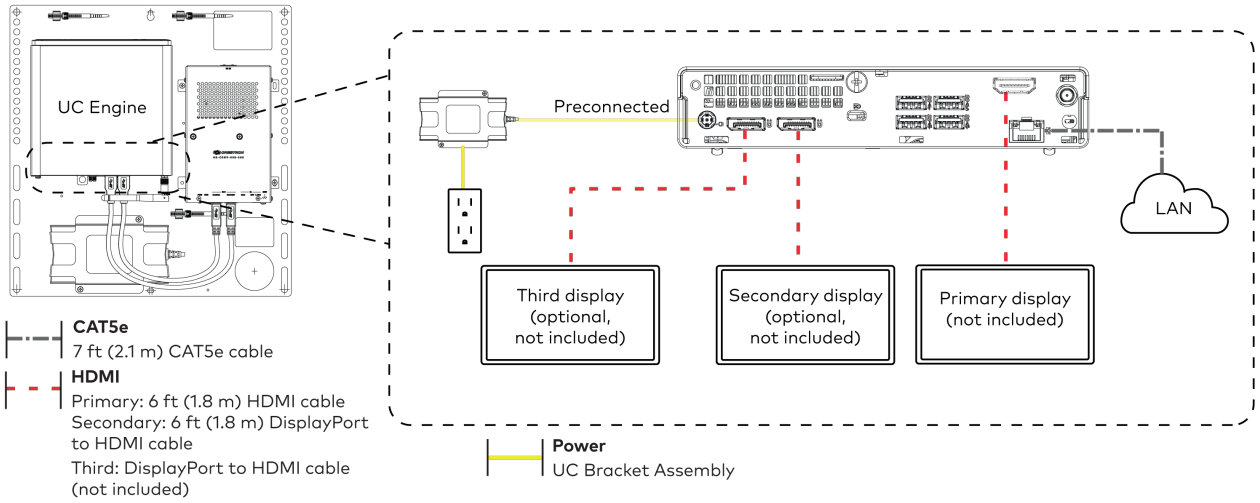

2. Connect the power supply, USB audio (accessory, not included), and a camera (not included) to the bottom of the content ingest device (HD-CONV-USB-260). Connect the power supply to an AC power outlet.

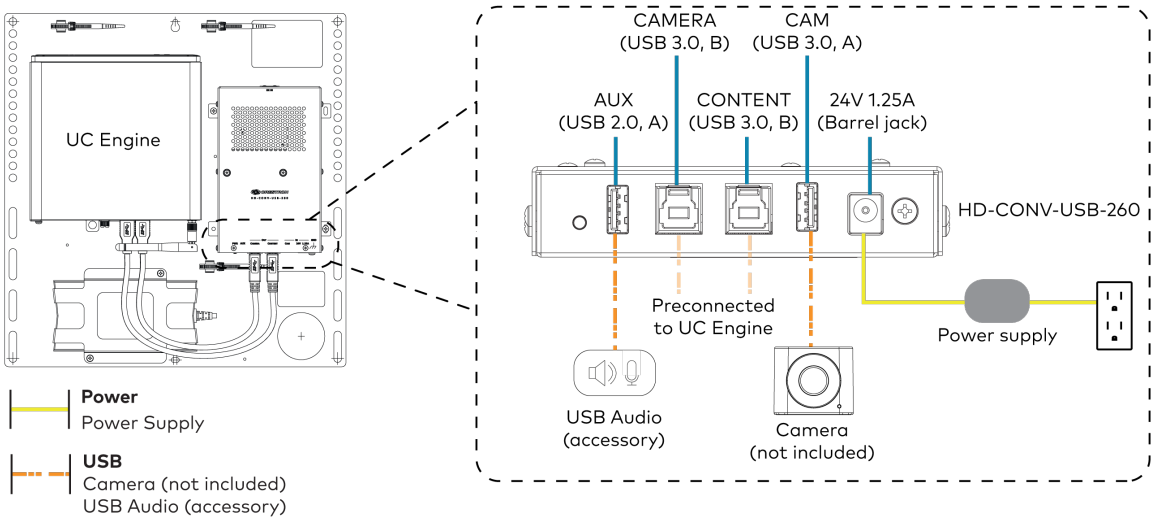

3. Connect power, the content ingest device (HD-CONV-USB-260), and LAN to the top of the UC Presentation Transmitter.

NOTE: If a longer cable between the UC Presentation Transmitter and the HD-CONV-USB-260 is needed, use a DigitalMedia™ Ultra cable only. The maximum supported cable length is 300 ft (91.4 m).

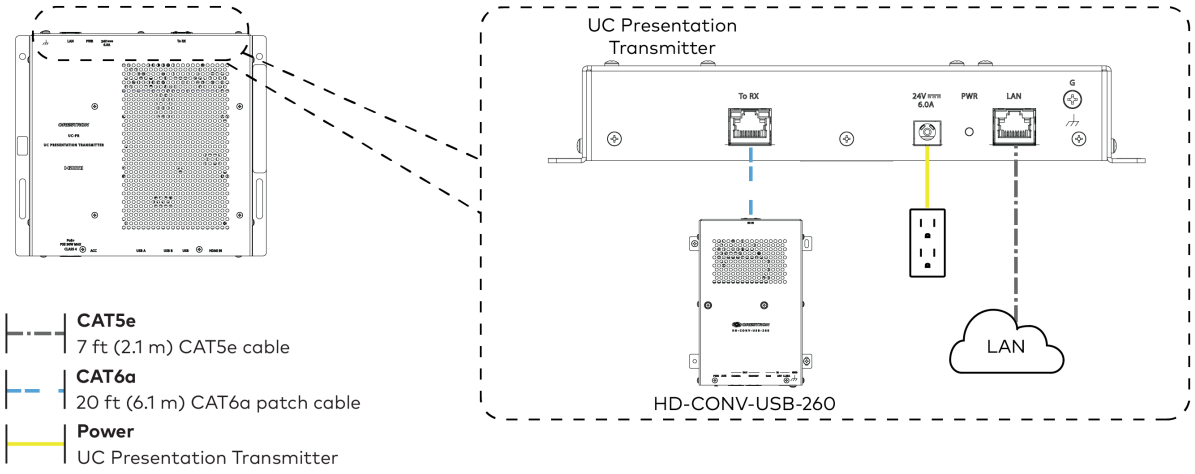

4. Connect the touch screen to the bottom of the UC Presentation Transmitter.

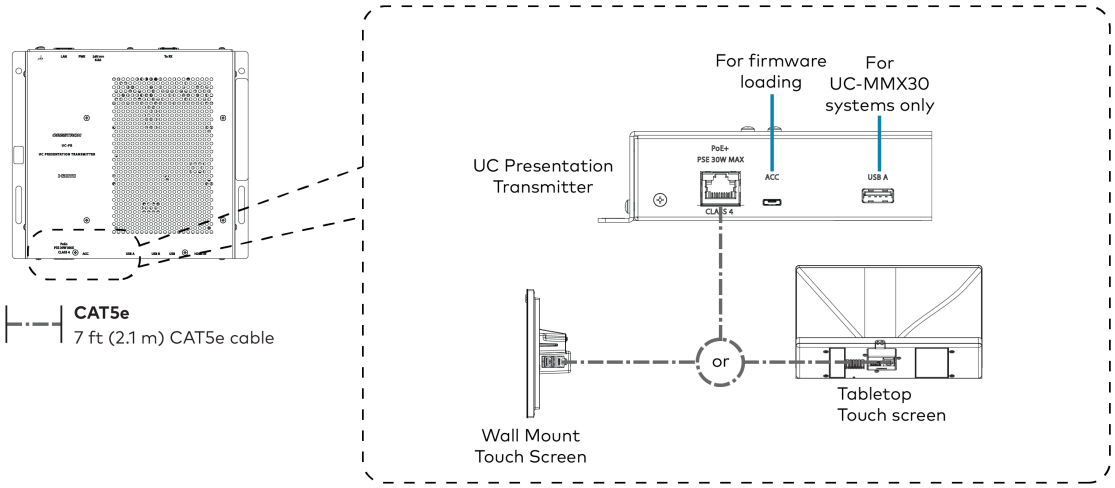

5. Connect a laptop to either the USB port or both the HDMI and USB B ports on the bottom of the UC Presentation Transmitter. Select a connection type based on the available ports on the user's laptop.

> **NOTE:** If the USB port is used along with either the HDMI or USB B port, the UC Presentation Transmitter will communicate via the USB port by default.

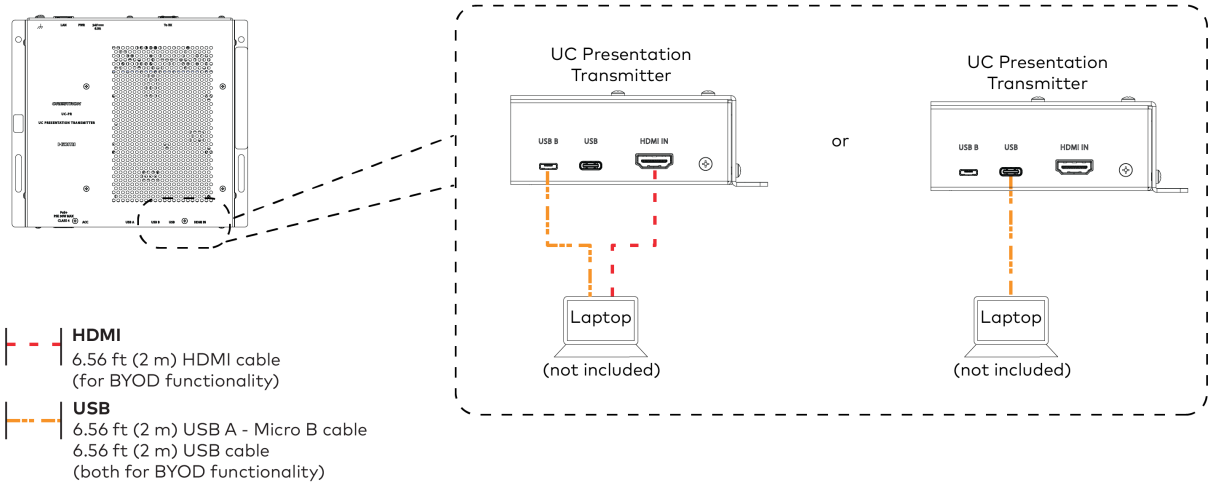

6. Bundle the cables to the bracket assembly with the integrated cable tie wraps. The cable tie wraps are reusable.

Apply Power

Press the power button on the bottom of the UC Engine and apply power to all of the other devices in the system. The connected display device will show a pairing code.

Log In to the Zoom Rooms Service

1. Tap **Touch Here to Enable a Specific Application** on the bottom of the screen. A list of applications is displayed.
2. Tap **Zoom Rooms** and then tap **Confirm**. The touch screen will reboot.
3. Enter the pairing code shown on the display to pair the touch screen with the UC Engine. The Zoom Rooms controller app is displayed.
4. Log in to the Zoom Rooms service with an activation code or Zoom Rooms Credentials (email and password).
    - **Activation Code:**
        a. Tap **Enter Activation Code**.
        b. Enter the 16-digit activation code provided by the administrator to activate the Zoom Room that is assigned to the activation code. The Zoom Rooms Conference Room screen is shown on the display.
    - **Sign In:**
        a. Tap **Sign In**.
        b. Enter the Zoom Room credentials and tap **Sign In**.
        c. Select the conference room name from the list and tap **Next**. The Zoom Rooms Conference Room screen is shown on the display.
5. Tap **Settings**. If a password is required, enter the password (the default password is "1234"). The **Settings** screen is displayed.
6. Tap **Microphone** and select the USB audio device as the source.
7. Tap **Speaker** and select the USB audio device as the source.
8. Tap **Meet Now** to exit.

Configure the System

Connect a USB keyboard and mouse (sold separately) to a USB port on the UC Engine to configure system features, as described in Configuration on page 553. For detailed information on using Zoom Rooms, refer to the Zoom Rooms Help Center.

UC-C100-PRO-Z and UC-C100-PRO-Z-WM

Minimum Requirements

Ensure that the below requirements are met prior to setting up the system.

- A certified USB Camera (not included). Crestron 1 Beyond cameras IV-CAMHK-12-SLVR-1B, IV-CAM-P12 and IV-CAM-P20 are recommended.
- A certified, AEC-enabled USB speakerphone or DSP device (not included). Refer to Zoom Rooms Certified Hardware for more information.
- A video display (not included) connected to the UC Engine. A second or third display is optional.
- A Zoom Rooms account or activation code (not included).

> **NOTE:** Unless otherwise indicated in this section, the connection procedure is the same for UC-C100-PRO-Z and UC-C100-PRO-Z-WM.

In the Box

Qty.	Description	UC-C100-PRO-Z	UC-C100-PRO-Z-WM
	Tabletop Touch Screen		
1	10.1 in. Tabletop Touch Screen (6510821)	✓	✗
1	Grommet, Cable, Closed (2055455)		
1	Grommet, Cable, Open (2055456)		
1	Cover, Cable compartment (2055457)		
	Wall Mount Touch Screen		
1	10.1 in. Wall Mount Touch Screen (6510814)	✗	✓
	Mounting hardware		
	UC Bracket Assembly		
1	UC Bracket Assembly with UC Engine and HDMI content ingest (UC-BRKT-200-PRO-Z-ASSY, 6513847)	✓	✓
2	Anchor, Drywall, Plastic, 3/8 in. x 1/2 in. (9.5 mm x 12.7 mm) (2052565)		
1	Key, Anchor (4529654)		
2	Screw, 8-AB x 1-1/2 in. (38.1 mm), Pan Head, Combo (2052567)		
4	Tie Wrap (2047935)		
	Additional Items		

Qty.	Description	UC-C100-PRO-Z	UC-C100-PRO-Z-WM
1	Cable, CAT5e, RJ-45 - RJ-45, 7 ft (2.1 m) (6509924)	✔	✔
1	Cable, CAT6a, RJ-45 - RJ-45, 20 ft (6.1 m) (6507640)		
2	Cable, HDMI® 2.1, 6 ft (1.8 m) (6512150)		
1	Cable, HDMI 2.1, 9 ft (2.7 m) (6512151)		
1	PoE injector (6502429)		
1	Cable, HDMI, 20 ft (6.1 m) (6503567)		
1	Cable, DisplayPort™ to HDMI, 6 ft (1.8 m) (6508282)		

Mount Devices

Mount the UC Bracket Assembly

Mount the UC Bracket Assembly to VESA® compliant display devices, a wall, or other building structure. Anchors and screws are supplied for installation on walls with 3/8 in. (9.5 mm) to 3/4 in. (19 mm) thickness.

CAUTION: Preinstalled screws may protrude from the back of the UC Bracket Assembly. Exercise caution when handling the UC Bracket Assembly to avoid scratching or damaging surfaces.

Mount the Wall-Mount Touch Screen

Mount the included wall-mount touch screen according to the TSW-1070 Product Manual (Doc. 8550).

System Overview

When connections are complete, the system appears as shown below. Refer to Make Connections on page 438 for detailed connection instructions.

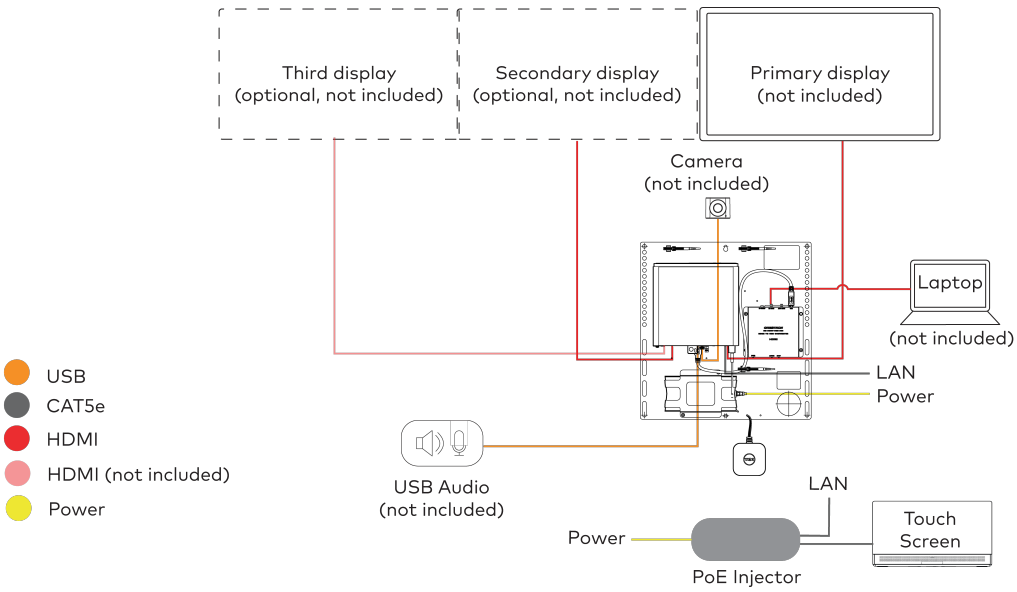

Make Connections

1. Make UC Engine and touch screen connections as shown in the following illustration.

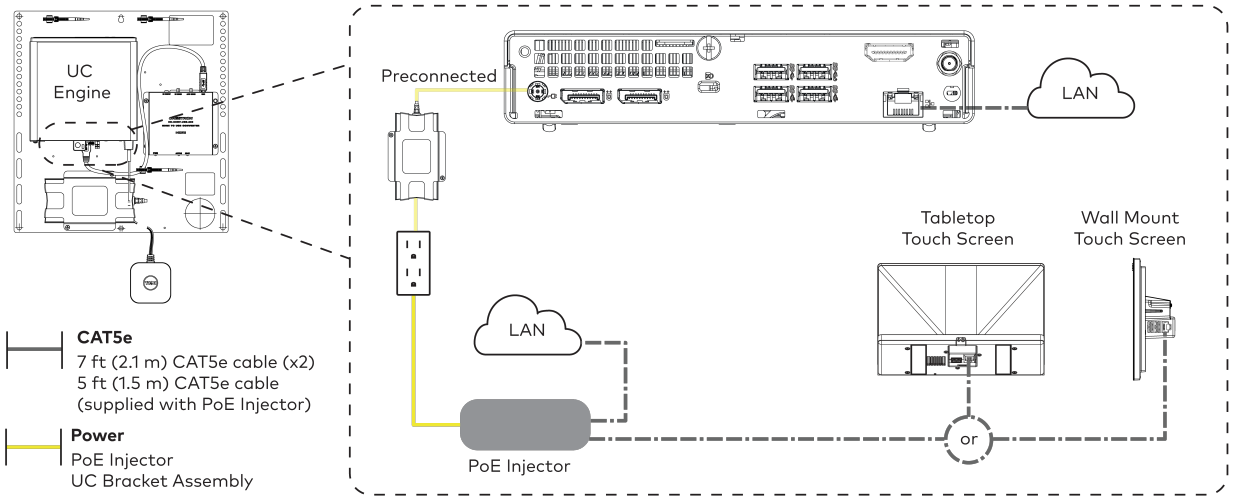

2. Connect a USB audio source (accessory, not included) and displays to the UC Engine.

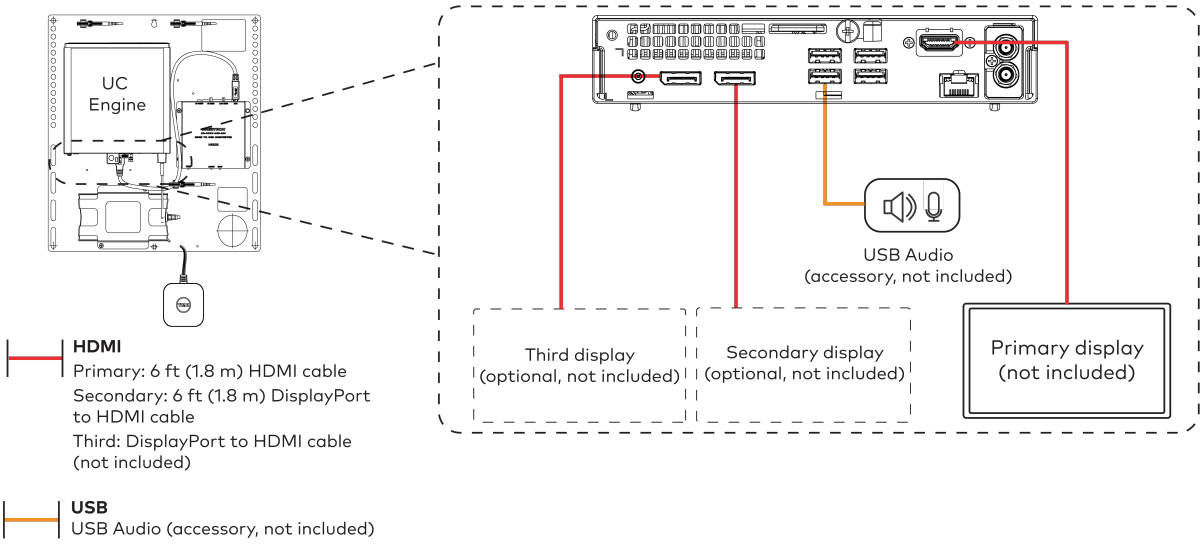

3. Connect cameras (not included) to the UC Engine as shown in the image below. Do not connect the cameras to any of the other USB ports.

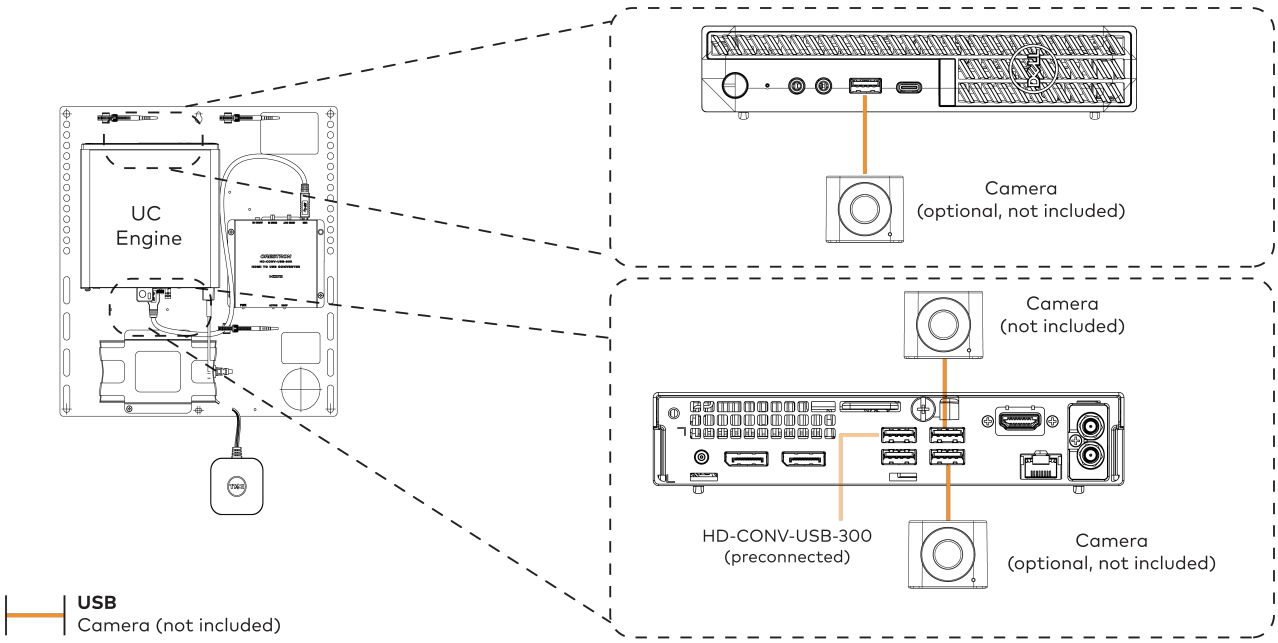

4. Connect a laptop to the HD-CONV-USB-300.

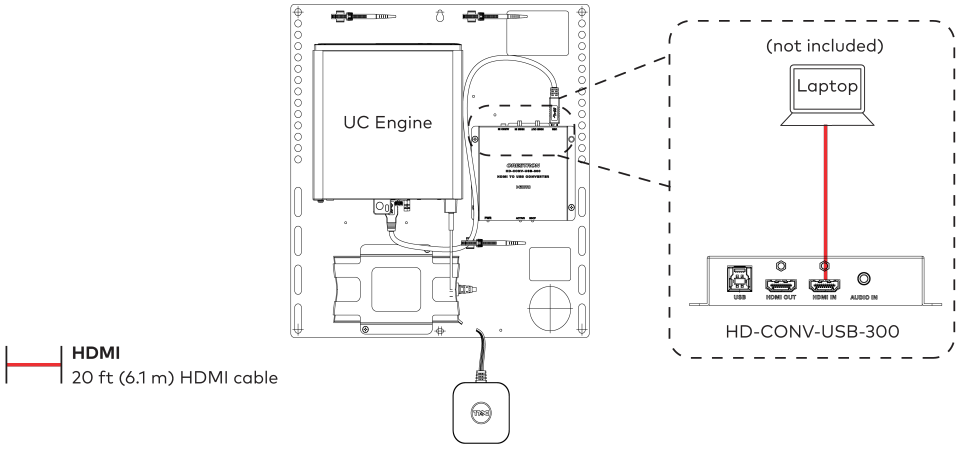

5. Bundle the cables to the bracket assembly with the integrated cable tie wraps. The cable tie wraps are reusable.

Apply Power

Press the power button on the bottom of the UC Engine and apply power to all of the other devices in the system. The connected display device will show a pairing code.

Log In to the Zoom Rooms Service

1. Tap **Touch Here to Enable a Specific Application** on the bottom of the screen. A list of applications is displayed.

2. Tap **Zoom Rooms** and then tap **Confirm**. The touch screen will reboot.
3. Enter the pairing code shown on the display to pair the touch screen with the UC Engine. The Zoom Rooms controller app is displayed.
4. Log in to the Zoom Rooms service with an activation code or Zoom Rooms Credentials (email and password).
    - **Activation Code:**
        a. Tap **Enter Activation Code**.
        b. Enter the 16-digit activation code provided by the administrator to activate the Zoom Room that is assigned to the activation code. The Zoom Rooms Conference Room screen is shown on the display.
    - **Sign In:**
        a. Tap **Sign In**.
        b. Enter the Zoom Room credentials and tap **Sign In**.
        c. Select the conference room name from the list and tap **Next**. The Zoom Rooms Conference Room screen is shown on the display.
5. Tap **Settings**. If a password is required, enter the password (the default password is "1234"). The **Settings** screen is displayed.
6. Tap **Microphone** and select the USB audio device as the source.
7. Tap **Speaker** and select the USB audio device as the source.
8. Tap **Meet Now** to exit.

Configure the System

Connect a USB keyboard and mouse (sold separately) to a USB port on the UC Engine to configure system features, as described in Configuration on page 553. For detailed information on using Zoom Rooms, refer to the Zoom Rooms Help Center.

UC-CX100-PRO-Z and UC-CX100-PRO-Z-WM

Minimum Requirements

Ensure that the below requirements are met prior to setting up the system.

- A certified USB Camera (not included). Crestron 1 Beyond cameras IV-CAMHK-12-SLVR-1B, IV-CAM-P12 and IV-CAM-P20 are recommended.
- A certified, AEC-enabled USB speakerphone or DSP device (not included). Refer to Zoom Rooms Certified Hardware for more information.
- A video display (not included) connected to the UC Engine. A second or third display is optional.
- A Zoom Rooms account or activation code (not included).

> **NOTE:** Unless otherwise indicated in this section, the connection procedure is the same for UC-CX100-PRO-Z and UC-CX100-PRO-Z-WM.

In the Box

Qty.	Description	UC-CX100-PRO-Z	UC-CX100-PRO-Z-WM
	Tabletop Touch Screen		
1	10.1 in. Tabletop Touch Screen (6510821)	✓	✗
1	Grommet, Cable, Closed (2055455)		
1	Grommet, Cable, Open (2055456)		
1	Cover, Cable compartment (2055457)		
	Wall Mount Touch Screen		
1	10.1 in. Wall Mount Touch Screen (6510814)	✗	✓
	Mounting hardware		
	UC Presentation Transmitter with Cable Organizer		
1	Presentation transmitter (6510936)	✓	✓
1	Cable Organizer (2056824, 2056825, 2056826)		
1	Power pack (2056363) with cord (2001134)		
1	Bracket, power supply (2056257)		
1	Cable, USB to USB, 6.56 ft (2 m) (2056116)		
1	Cable, HDMI®, 6.56 ft (2 m) (2056117)		
1	Cable, USB 2.0, A to Micro B, 6.56 ft (2 m) (2055504)		
8	Screw, 10-9 x 5/8 in. (15.9 mm), Pan Head, Phillips, Black (2054365)		
2	Screw, 04-40 x 3/8 in. (10 mm), Pan Head, Phillips, Black (2007170)		
	UC Bracket Assembly		

Qty.	Description	UC-CX100-PRO-Z	UC-CX100-PRO-Z-WM
1	UC Bracket Assembly with UC Engine and HDMI® or AV over CAT5 content ingest (UC-BRKT-260-PRO-Z-ASSY, 6513996)	✔	✔
2	Anchor, Drywall, Plastic, 3/8 in. x 1/2 in. (9.5 mm x 12.7 mm) (2052565)		
1	Key, Anchor (4529654)		
1	Power pack (2045870)		
2	Screw, 8-AB x 1-1/2 in. (38.1 mm), Pan Head, Combo (2052567)		
4	Tie Wrap (2047935)		
	Additional Items		
1	Cable, CAT5e, RJ-45 - RJ-45, 7 ft (2.1 m) (6509924)	✔	✔
1	Cable, CAT6a, RJ-45 - RJ-45, 20 ft (6.1 m) (6507640)		
1	Cable, HDMI, 6 ft (1.8 m) (6503565)		
1	Cable, DisplayPort™ to HDMI, 6 ft (1.8 m) (6508282)		

Mount Devices

Mount the UC Bracket Assembly

Mount the UC Bracket Assembly to VESA® compliant display devices, a wall, or other building structure. Anchors and screws are supplied for installation on walls with 3/8 in. (9.5 mm) to 3/4 in. (19 mm) thickness.

CAUTION: Preinstalled screws may protrude from the back of the UC Bracket Assembly. Exercise caution when handling the UC Bracket Assembly to avoid scratching or damaging surfaces.

NOTE: The integrated cable tie wraps are reusable. Avoid damaging the cable tie wraps.

Mount the UC Presentation Transmitter

Mount the UC Presentation Transmitter to the underside of a table using the supplied screws. The supplied screws support installation on tables with a thickness of 1 in. (25.4 mm) minimum.

Mount the Cable Organizer for the UC-PR

Mount the Cable Organizer according to the Cable Organizer for the UC-PR (Doc. 8966).

Mount the Wall-Mount Touch Screen

Mount the included wall-mount touch screen according to the TSW-1070 Product Manual (Doc. 8550).

System Overview

When connections are complete, the system appears as shown below. The laptop connections shown below may vary based on the selected connection method. Refer to Make Connections on page 443 for detailed connection instructions.

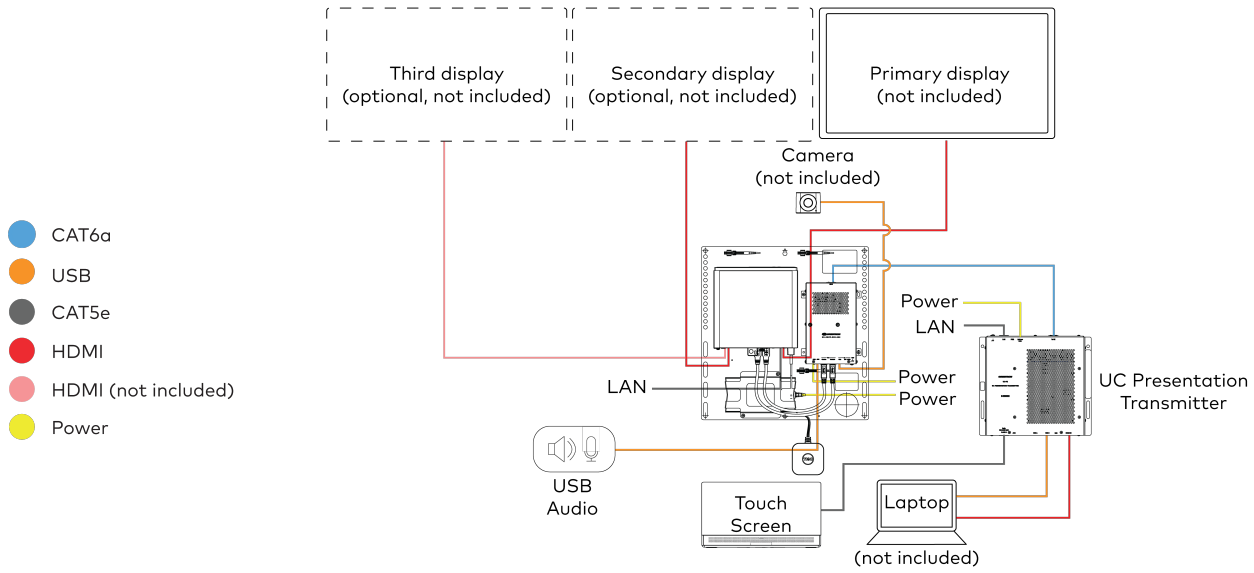

Make Connections

1. Make UC Engine connections as shown in the following illustration.

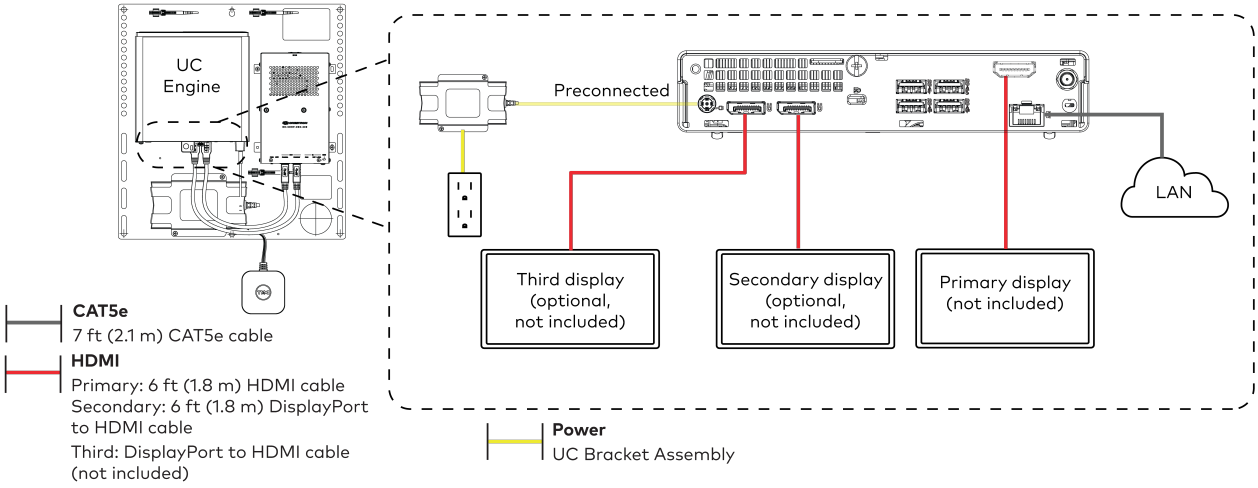

2. Connect the power supply, USB audio (accessory, not included), and a camera (not included) to the bottom of the content ingest device (HD-CONV-USB-260). Connect the power supply to an AC power outlet.

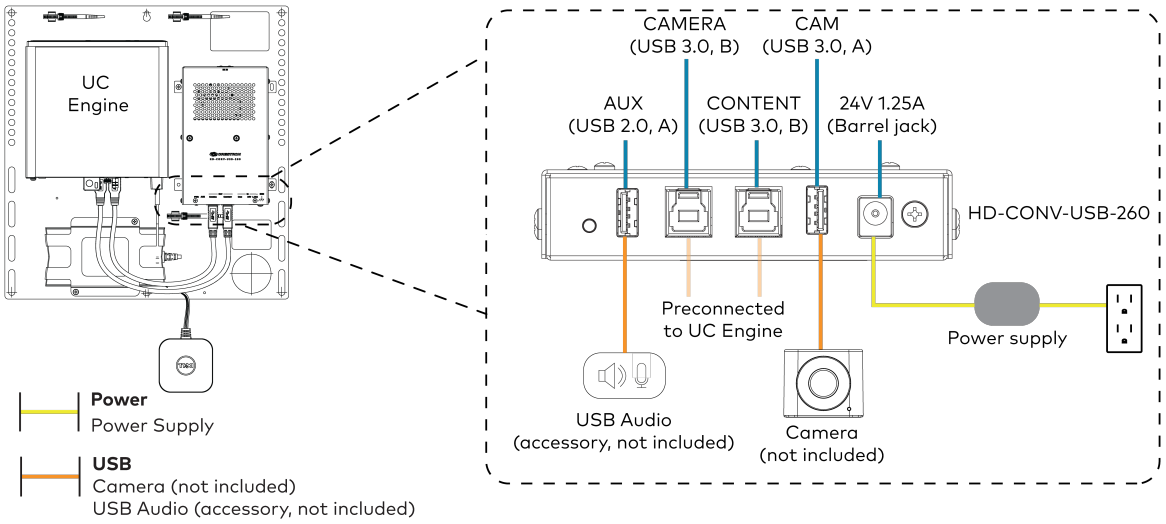

3. Connect cameras (not included) to the UC Engine as shown in the image below. Do not connect the cameras to any of the other USB ports.

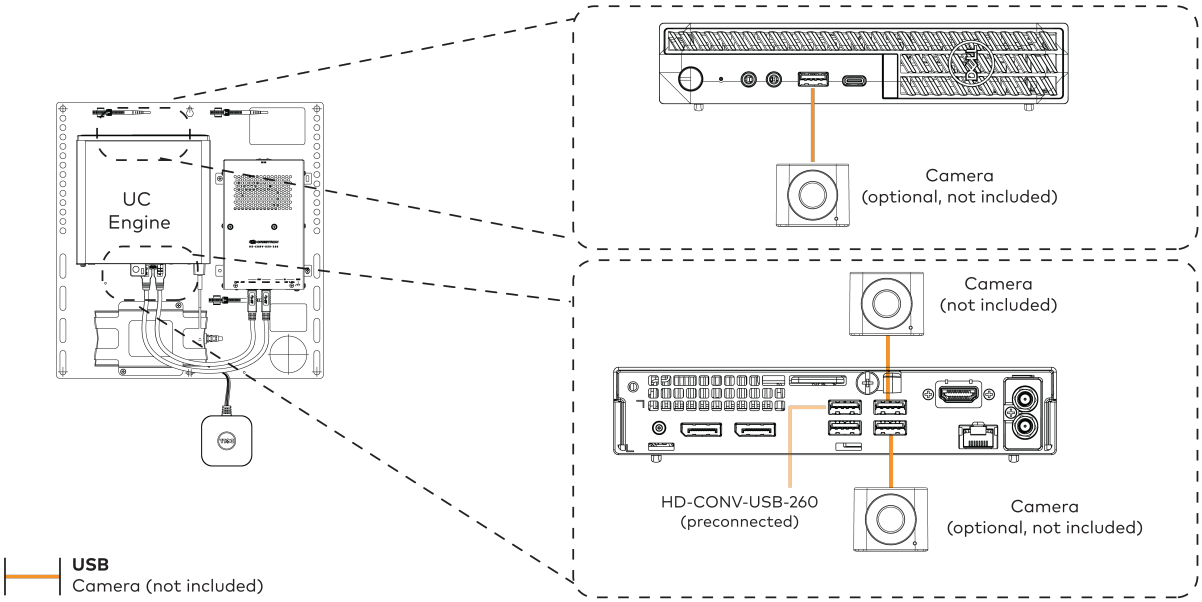

4. Connect power, the content ingest device (HD-CONV-USB-260), and LAN to the top of the UC Presentation Transmitter.

NOTE: If a longer cable between the UC Presentation Transmitter and the HD-CONV-USB-260 is needed, use a DigitalMedia™ Ultra cable only. The maximum supported cable length is 300 ft (91.4 m).

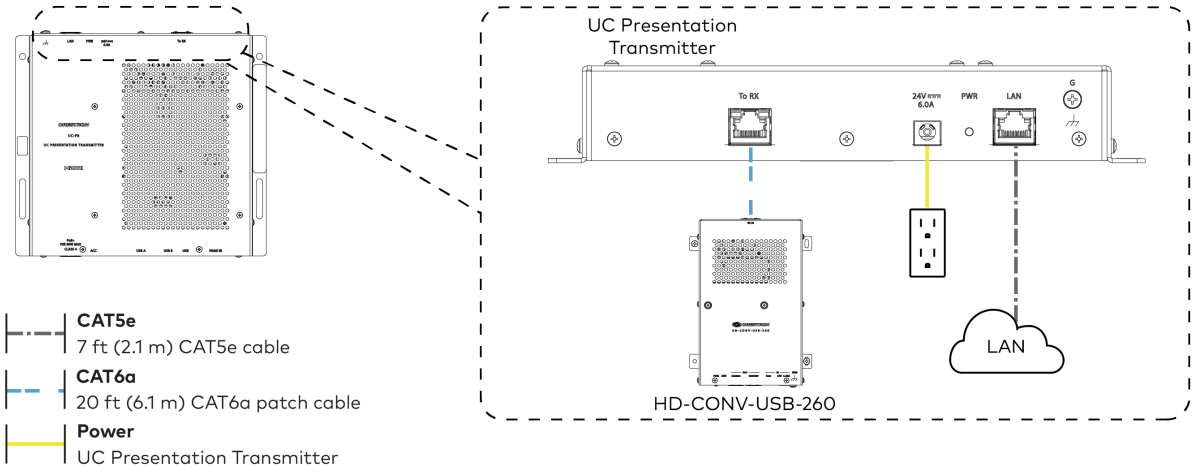

5. Connect the touch screen to the bottom of the UC Presentation Transmitter.

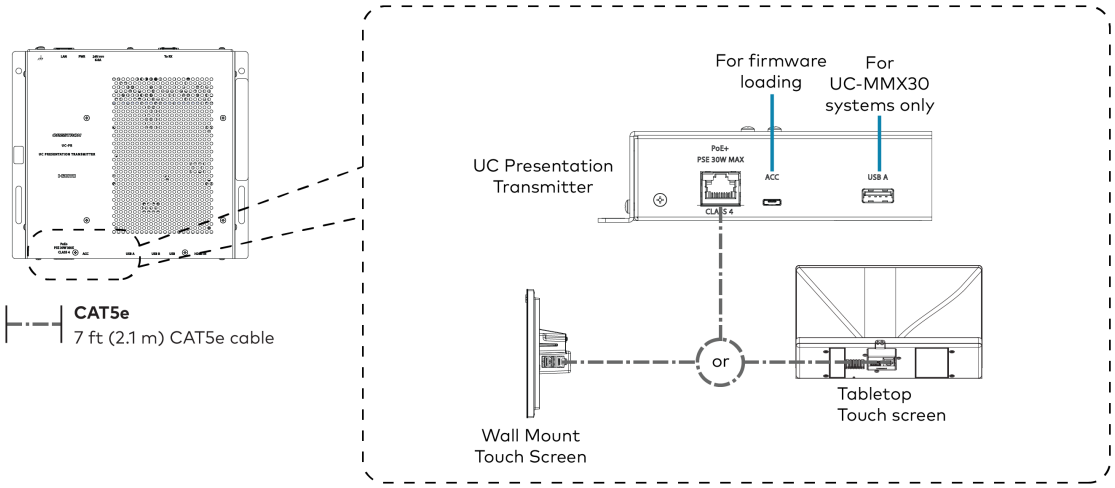

6. Connect a laptop to either the USB port or both the HDMI and USB B ports on the bottom of the UC Presentation Transmitter. Select a connection type based on the available ports on the user's laptop.

> **NOTE:** If the USB port is used along with either the HDMI or USB B port, the UC Presentation Transmitter will communicate via the USB port by default.

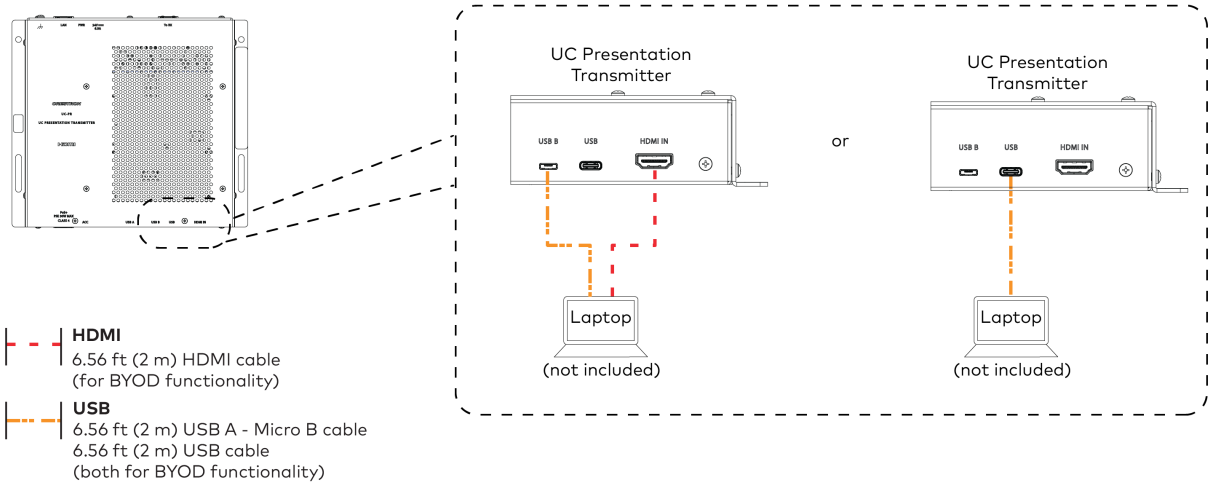

7. Bundle the cables to the bracket assembly with the integrated cable tie wraps. The cable tie wraps are reusable.

Apply Power

Press the power button on the bottom of the UC Engine and apply power to all of the other devices in the system. The connected display device will show a pairing code.

Log In to the Zoom Rooms Service

1. Tap **Touch Here to Enable a Specific Application** on the bottom of the screen. A list of applications is displayed.
2. Tap **Zoom Rooms** and then tap **Confirm**. The touch screen will reboot.
3. Enter the pairing code shown on the display to pair the touch screen with the UC Engine. The Zoom Rooms controller app is displayed.
4. Log in to the Zoom Rooms service with an activation code or Zoom Rooms Credentials (email and password).
    - **Activation Code:**
        a. Tap **Enter Activation Code**.
        b. Enter the 16-digit activation code provided by the administrator to activate the Zoom Room that is assigned to the activation code. The Zoom Rooms Conference Room screen is shown on the display.
    - **Sign In:**
        a. Tap **Sign In**.
        b. Enter the Zoom Room credentials and tap **Sign In**.
        c. Select the conference room name from the list and tap **Next**. The Zoom Rooms Conference Room screen is shown on the display.
5. Tap **Settings**. If a password is required, enter the password (the default password is "1234"). The **Settings** screen is displayed.
6. Tap **Microphone** and select the USB audio device as the source.
7. Tap **Speaker** and select the USB audio device as the source.
8. Tap **Meet Now** to exit.

Configure the System

Connect a USB keyboard and mouse (sold separately) to a USB port on the UC Engine to configure system features, as described in Configuration on page 553. For detailed information on using Zoom Rooms, refer to the Zoom Rooms Help Center.

UC-MM30-Z and UC-MM30-Z-I

Minimum Requirements

Ensure that the below requirements are met prior to setting up the system.

- A video display (not included) connected to the UC Engine. A second or third display is optional.
- A Zoom Rooms account or activation code (not included).

> **NOTE:** Unless otherwise indicated in this section, the connection procedure is the same for UC-MM30-Z and UC-MM30-Z-I.

In The Box

Qty.	Description
	UC Bracket Assembly
1	UC Bracket Assembly with UC Engine and HDMI content ingest (UC-BRKT-200-S-Z-ASSY, 6512690)
2	Anchor, Drywall, Plastic, 3/8 in. x 1/2 in. (9.5 mm x 12.7 mm) (2052565)
1	Key, Anchor (4529654)
2	Screw, 8-AB x 1-1/2 in. (38.1 mm), Pan Head, Combo (2052567)
4	Tie Wrap (2047935)
	Mini Tabletop Conference Device
1	Flex MM Tabletop Conference Device, Microsoft Teams video (6511615 or 6511616)
1	PoE+ Injector (2055605)
2	Cable, CAT5e, RJ-45 - RJ-45, 11.8 ft (3.6 m) (2056204)
1	Cable, USB 2.0, A - Micro B, 5.8 ft (1.8 m) (2055579)
	Camera
1	Collaboration camera (6510482)
1	Camera wall mount kit (6510998)
	Additional Items
1	Cable, CAT5e, RJ-45 - RJ-45, 7 ft (2.1 m) (6509924)
1	Cable, HDMI 2.1, 6 ft (1.8 m) (6512150)
1	Cable, HDMI, 20 ft (6.1 m) (6503567)
1	Cable, DisplayPort™ to HDMI, 6 ft (1.8 m) (6508282)
1	Cable, USB Extension, USB Type A Male-to-Female, 15 ft (4.6 m) (6508260)
1	Cable, USB 3.0, Right angle USB-C to A, 6 ft (1.8 m) (6511591)

Mount Devices

Mount the UC Bracket Assembly

Mount the UC Bracket Assembly to VESA® compliant display devices, a wall, or other building structure. Anchors and screws are supplied for installation on walls with 3/8 in. (9.5 mm) to 3/4 in. (19 mm) thickness.

CAUTION: Preinstalled screws may protrude from the back of the UC Bracket Assembly. Exercise caution when handling the UC Bracket Assembly to avoid scratching or damaging surfaces.

NOTE: The integrated cable tie wraps are reusable. Avoid damaging the cable tie wraps.

Mount the Camera

Mount the included camera according to the UC-CAM-WMK Quick Start (Doc. 8257).

Mount the Tabletop Conference Device

The tabletop conference device can be placed on any flat surface or secured on a table using the UCA-SMK-UC2 or UCA-SMKR-UC2-3 tabletop swivel mount kit (sold separately). Refer to Quick Start: UC-2-Z(-I) for functional details.

Identify the UC Bracket Assembly

The UC Bracket Assembly is available in two models. Identify the model included with your Crestron Flex system. Tap or click the corresponding image below to navigate to the appropriate connection instructions.

UC Bracket Assembly with HD-CONV-USB-200

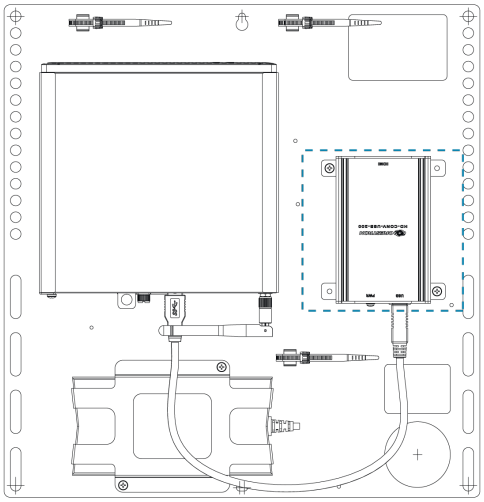

UC Bracket Assembly with HD-CONV-USB-300

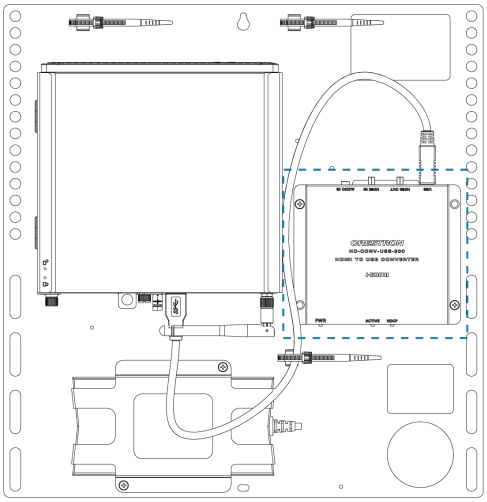

System Overview

For UC Bracket Assembly with HD-CONV-USB-200

When connections are complete, the system appears as shown below. Refer to Make Connections on page 452 for detailed connection instructions.

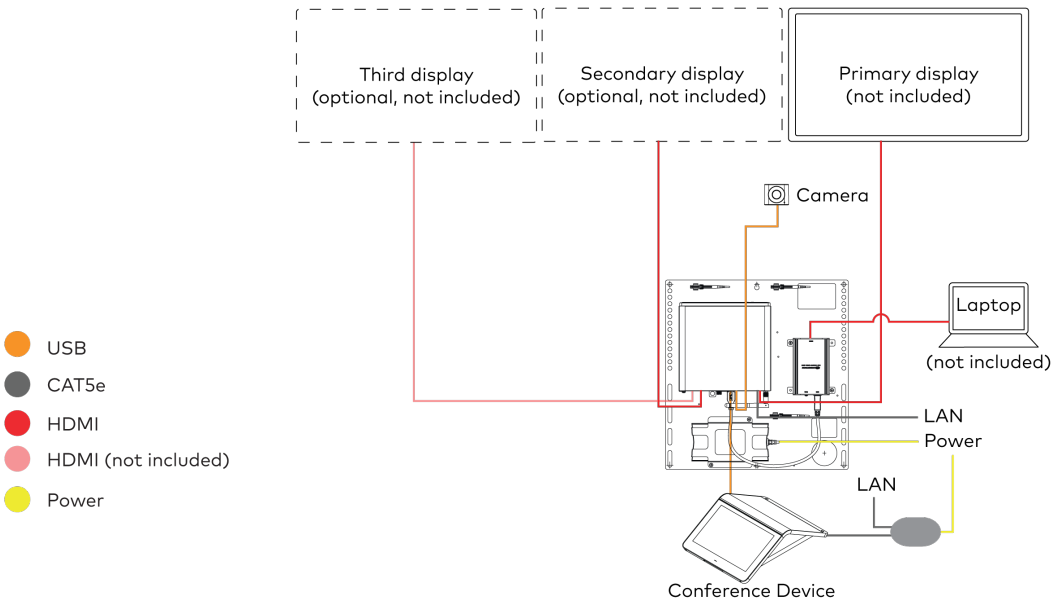

For UC Bracket Assembly with HD-CONV-USB-300

When connections are complete, the system appears as shown below. Refer to Make Connections on page 452 for detailed connection instructions.

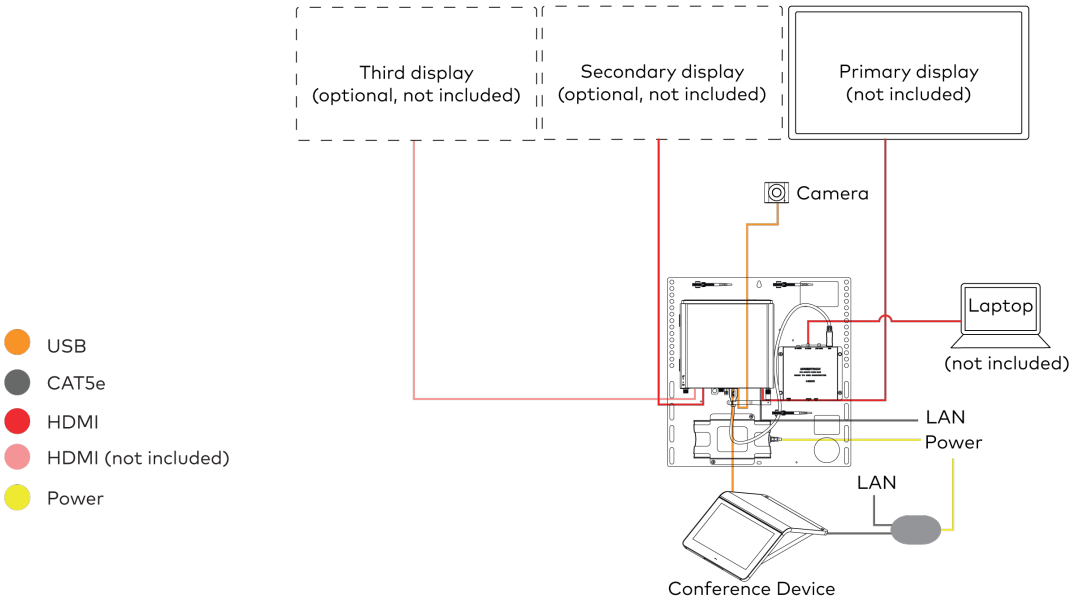

Make Connections

NOTE: For reference, the UC Bracket Assembly is shown with the HD-CONV-USB-200 in the following connection diagrams. Unless otherwise indicated in this guide, the connections remain the same for the UC Bracket Assembly with HD-CONV-USB-200 and HD-CONV-USB-300.

1. Make UC Engine connections as shown in the following illustration.

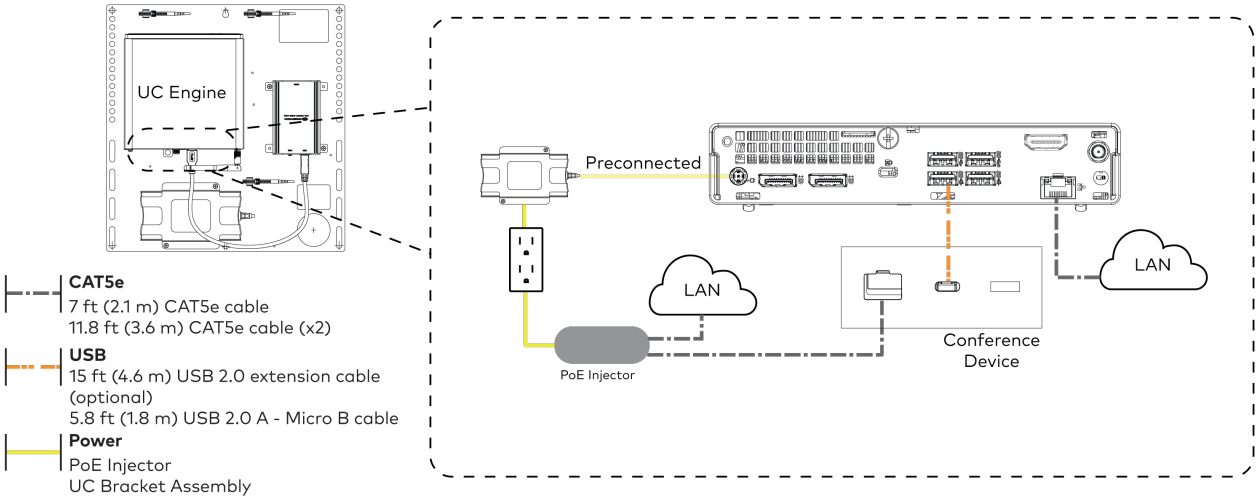

2. Connect displays to the UC Engine.

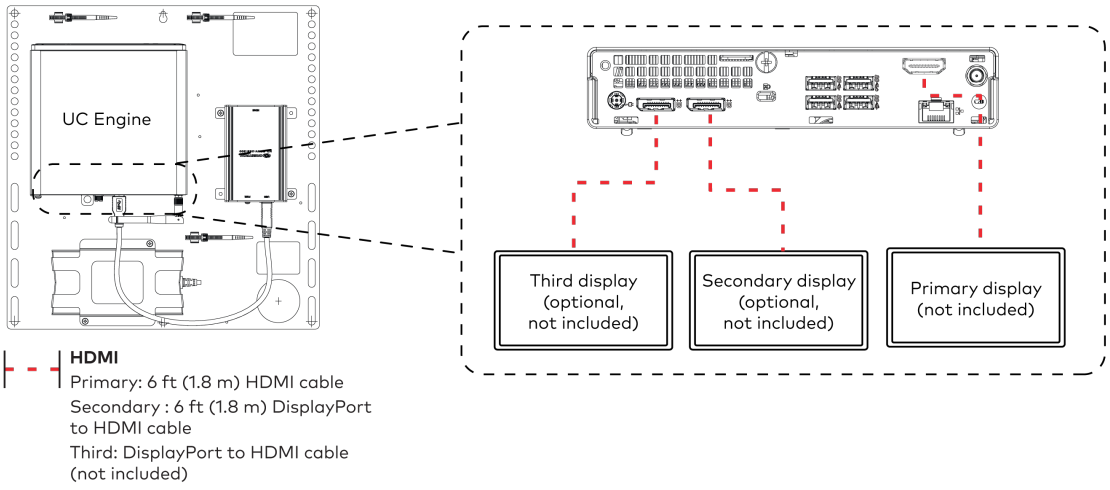

3. Connect the camera to the UC Engine as shown in the image below. Do not connect the camera to any of the other USB ports.

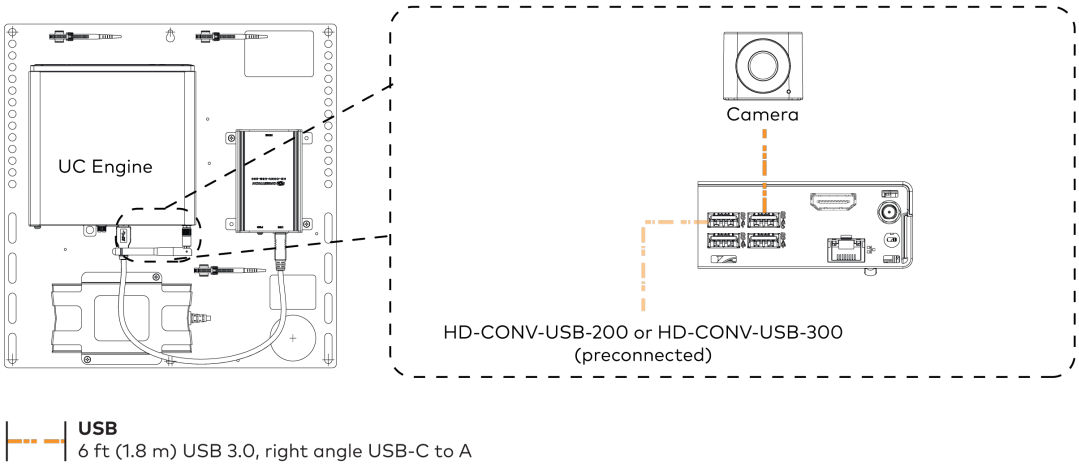

4. Connect a laptop to the HD-CONV-USB-200 or HD-CONV-USB-300.

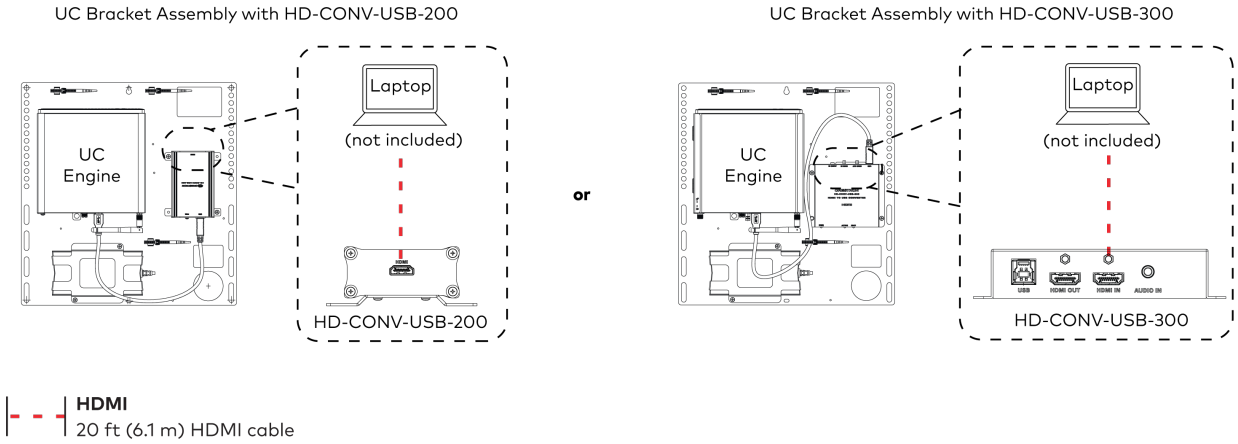

5. Bundle the cables to the bracket assembly with the integrated cable tie wraps. The cable tie wraps are reusable.

Apply Power

Press the power button on the bottom of the UC Engine and apply power to all of the other devices in the system. The connected display device will show a pairing code. The conference device will show a prompt to enter a pairing code.

Log In to the Zoom Rooms Service

Use the conference device to sign in to the Zoom Rooms service using an activation code or a Zoom Room Sign-In.

1. Tap **Zoom** and then tap **OK**. The device will reboot.
2. Enter the pairing code shown on the display to pair the device with the UC Engine. The Zoom Rooms controller app is displayed.

3. Log in to the Zoom Rooms service with an activation code or Zoom Rooms Credentials (email and password).
    - **Activation Code:**
        a. Tap **Enter Activation Code**.
        b. Enter the 16-digit activation code provided by the IT administrator managing the Zoom portal to activate the Zoom Room assigned to the activation code. The Zoom Rooms Conference Room screen is shown on the display.
    - **Sign In:**
        a. Tap **Sign In**.
        b. Enter the Zoom Room credentials and tap **Sign In**.
        c. Select the conference room name from the list and tap **Next**. The Zoom Rooms Conference Room screen is shown on the display.
4. Tap **Settings**. If a password is required, enter the password (the default password is "1234"). The **Settings** screen is displayed.
5. Tap **Microphone** and select the conference device as the source.
6. Tap **Speaker** and select the conference device as the source.
7. Tap **Meet Now** to exit.

Configure the System

Connect a USB keyboard and mouse (sold separately) to a USB port on the UC Engine to configure system features, as described in Configuration on page 553. For detailed information on using Zoom Rooms, refer to the Zoom Rooms Help Center.

Factory Reset

A factory reset may be performed when troubleshooting the conference device.

To perform a factory reset on the conference device:

1. Power cycle the device by disconnecting and reconnecting the CAT5e cable from the conference device.
2. When the device powers on and the LEDs flash green, tap the button below the Crestron® logo 10 times. A factory reset confirmation screen appears.

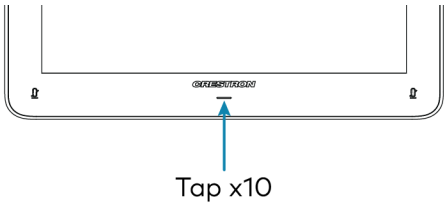

3. Tap one of the mute buttons to move the selector on the factory reset confirmation screen to **Yes**. Tap the button below the Crestron logo to confirm the factory reset.

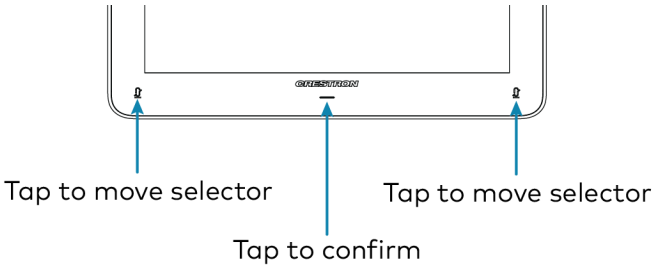

4. The device will reboot. Configure the device as described in Configure the Conference Device section.

UC-MMX30-Z and UC-MMX30-Z-I

Minimum Requirements

Ensure that the below requirements are met prior to setting up the system.

- A video display (not included) connected to the UC Engine. A second or third display is optional.
- A Zoom Rooms account or activation code (not included).

> **NOTE:** Unless otherwise indicated in this section, the connection procedure is the same for UC-MMX30-Z and UC-MMX30-Z-I.

In The Box

Qty.	Description
	UC Bracket Assembly
1	UC Bracket Assembly with UC Engine and HDMI or AV over CAT5 content ingest (UC-BRKT-260-P-Z-ASSY, 6512692)
1	Power pack (2045870)
2	Anchor, Drywall, Plastic, 3/8 in. x 1/2 in. (9.5 mm x 12.7 mm) (2052565)
1	Key, Anchor (4529654)
2	Screw, 8-AB x 1-1/2 in. (38.1 mm), Pan Head, Combo (2052567)
4	Tie Wrap (2047935)
	UC Presentation Transmitter with Cable Organizer
1	Presentation transmitter (6510936)
1	Cable Organizer
1	Power pack (2056363) with cord (2001134)
1	Bracket, power supply (2056257)
1	Cable, USB to USB, 6.56 ft (2 m) (2056116)
1	Cable, HDMI®, 6.56 ft (2 m) (2056117)
1	Cable, USB 2.0, A to Micro B, 6.56 ft (2 m) (2055504)
8	Screw, 10-9 x 5/8 in. (15.9 mm), Pan Head, Phillips, Black (2054365)
	Mini Tabletop Conference Device
1	Flex MM Tabletop Conference Device, Microsoft Teams video (6511615 or 6511616)
1	PoE+ Injector (2055605)
2	Cable, CAT5e, RJ-45 - RJ-45, 11.8 ft (3.6 m) (2056204)
1	Cable, USB 2.0, A - Micro B, 5.8 ft (1.8 m) (2055579)
	Camera
1	Collaboration camera (6510482)
1	Camera wall mount kit (6510998)
	Additional Items
2	Cable, CAT6a, RJ-45 - RJ-45, 20 ft (6.1 m) (6507640)
1	Cable, CAT5e, RJ-45 - RJ-45, 7 ft (2.1 m) (6509924)

Qty.	Description
1	Cable, HDMI 2.1, 6 ft (1.8 m) (6512150)
1	Cable, DisplayPort™ to HDMI, 6 ft (1.8 m) (6508282)
1	Cable, USB 3.0, Right angle USB-C to A, 6 ft (1.8 m) (6511591)

Mount Devices

Mount the UC Bracket Assembly

Mount the UC Bracket Assembly to VESA® compliant display devices, a wall, or other building structure. Anchors and screws are supplied for installation on walls with 3/8 in. (9.5 mm) to 3/4 in. (19 mm) thickness.

CAUTION: Preinstalled screws may protrude from the back of the UC Bracket Assembly. Exercise caution when handling the UC Bracket Assembly to avoid scratching or damaging surfaces.

NOTE: The integrated cable tie wraps are reusable. Avoid damaging the cable tie wraps.

Mount the UC Presentation Transmitter

Mount the UC Presentation Transmitter to the underside of a table using the supplied screws. The supplied screws support installation on tables with a thickness of 1 in. (25.4 mm) minimum.

Mount the Cable Organizer for the UC-PR

Mount the Cable Organizer according to the Cable Organizer for the UC-PR (Doc. 8966).

Mount the Camera

Mount the included camera according to the UC-CAM-WMK Quick Start (Doc. 8257).

Mount the Tabletop Conference Device

The tabletop conference device can be placed on any flat surface or secured on a table using the UCA-SMK-UC2 or UCA-SMKR-UC2-3 tabletop swivel mount kit (sold separately). Refer to Quick Start: UC-2-Z(-I) for functional details.

System Overview

When connections are complete, the system appears as shown below. The laptop connections shown below may vary based on the selected connection method. Refer to Make Connections on page 459 for detailed connection instructions.

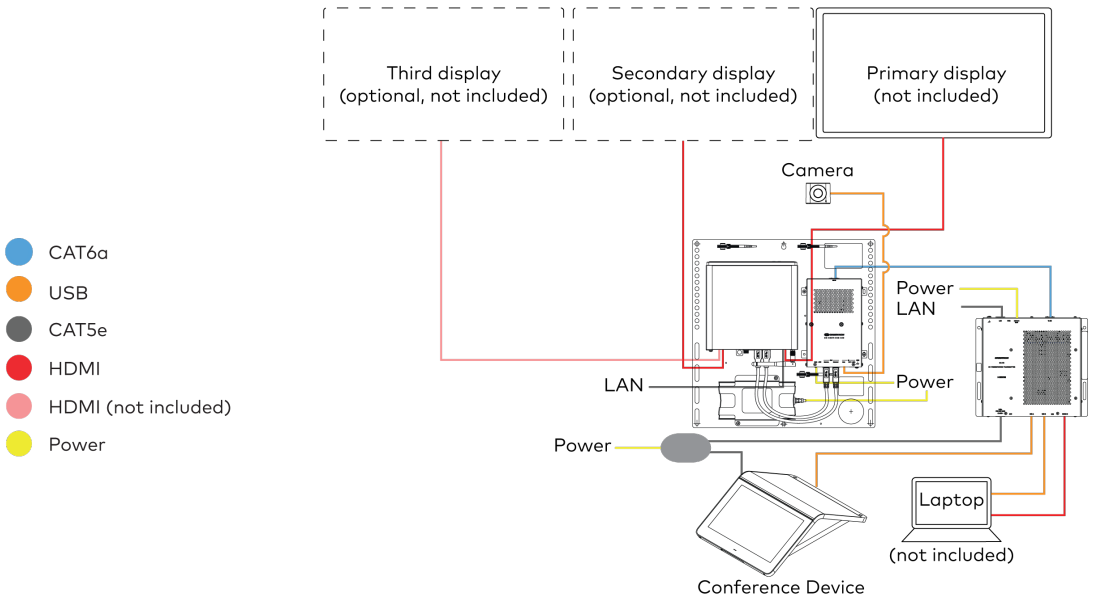

Make Connections

1. Make UC Engine connections as shown in the following illustration.

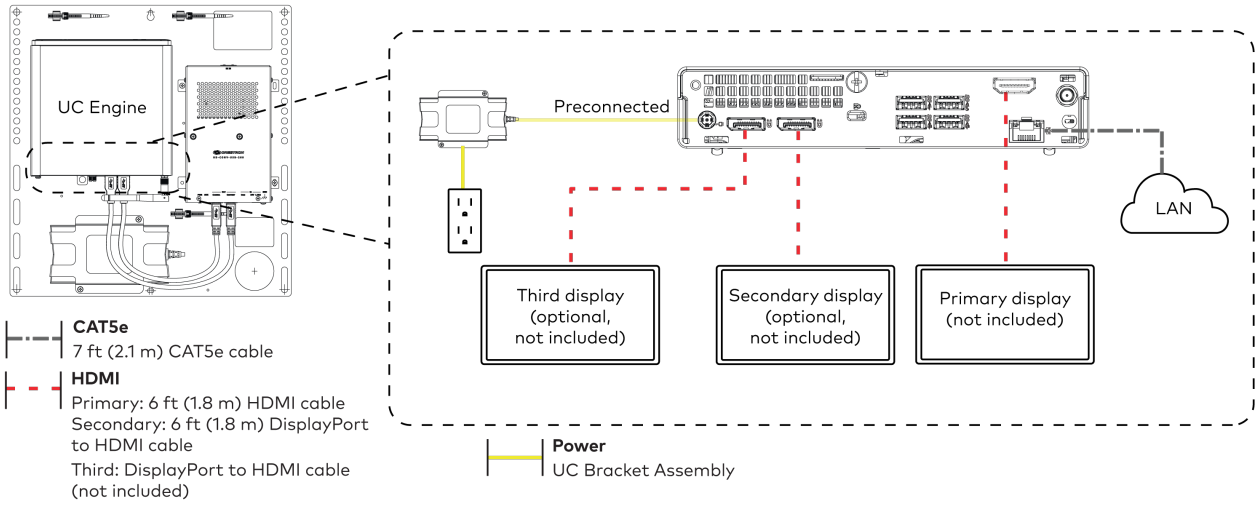

2. Connect the power supply and camera to the bottom of the content ingest device (HD-CONV-USB-260). Connect the power supply to an AC power outlet.

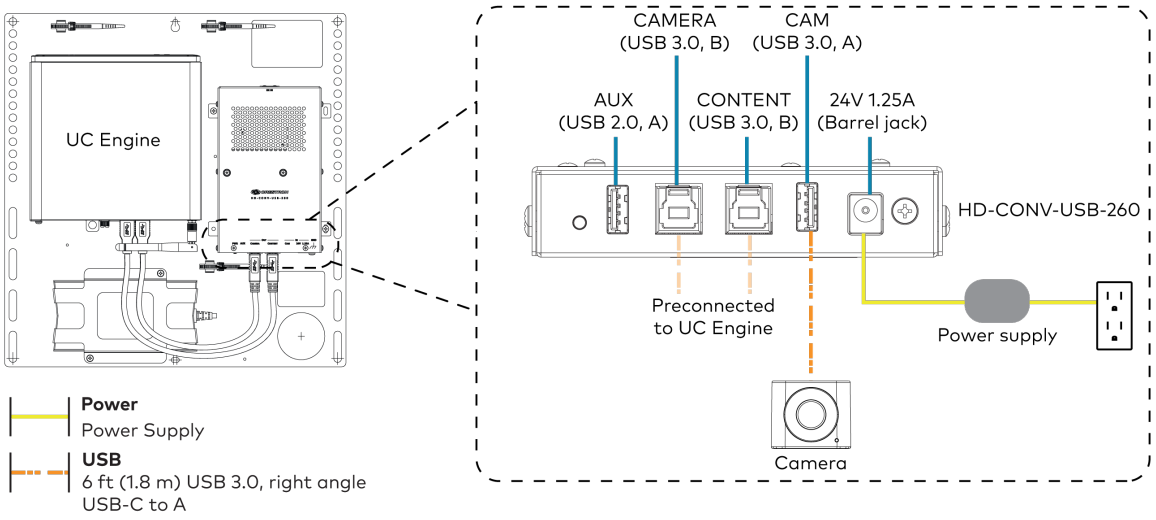

3. Connect power, the content ingest device (HD-CONV-USB-260), and LAN to the top of the UC Presentation Transmitter.

NOTE: If a longer cable between the UC Presentation Transmitter and the HD-CONV-USB-260 is needed, use a DigitalMedia™ Ultra cable only. The maximum supported cable length is 300 ft (91.4 m).

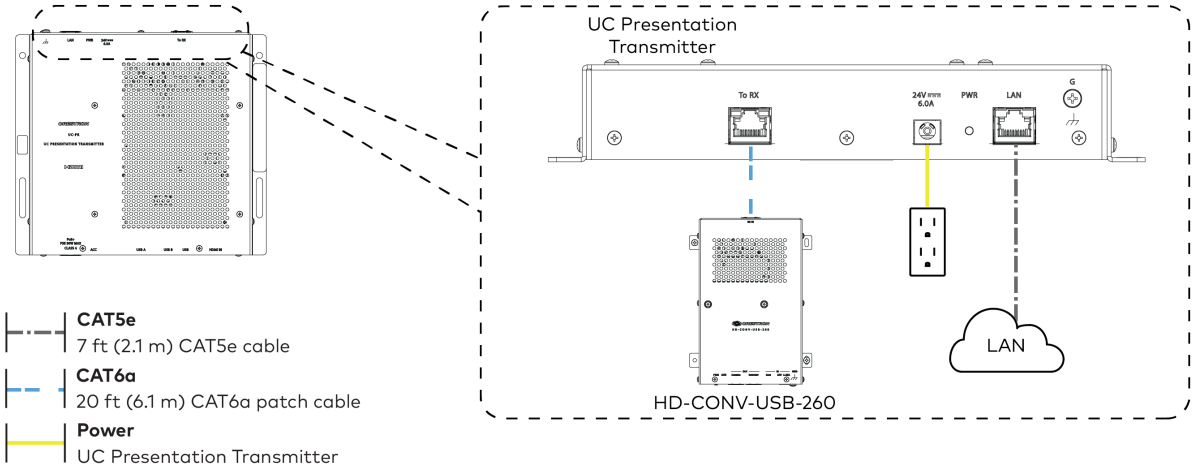

4. Connect the conference device using the included PoE+ injector and USB A to Micro-B cable to the bottom of the UC Presentation Transmitter.

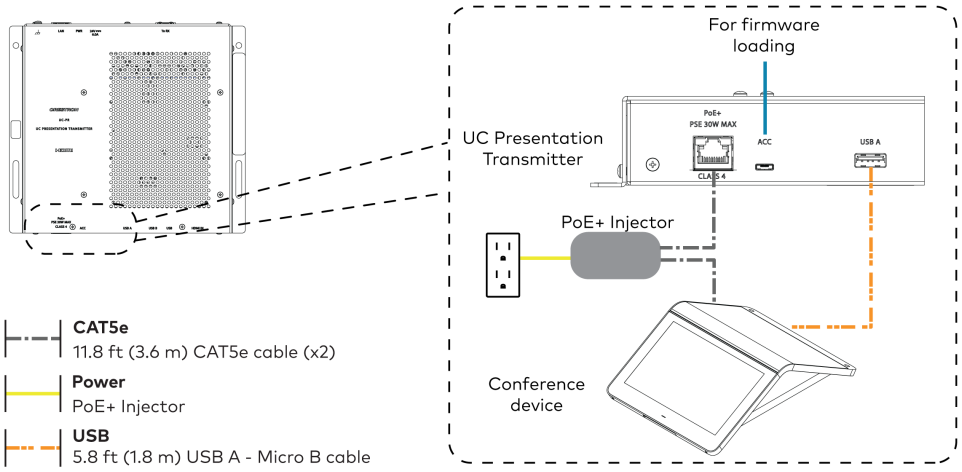

5. Connect a laptop to either the USB port or both the HDMI and USB B ports on the bottom of the UC Presentation Transmitter. Select a connection type based on the available ports on the user's laptop.

NOTE:

- When connecting a laptop for BYOD presentation, select the audio source on the connected laptop.

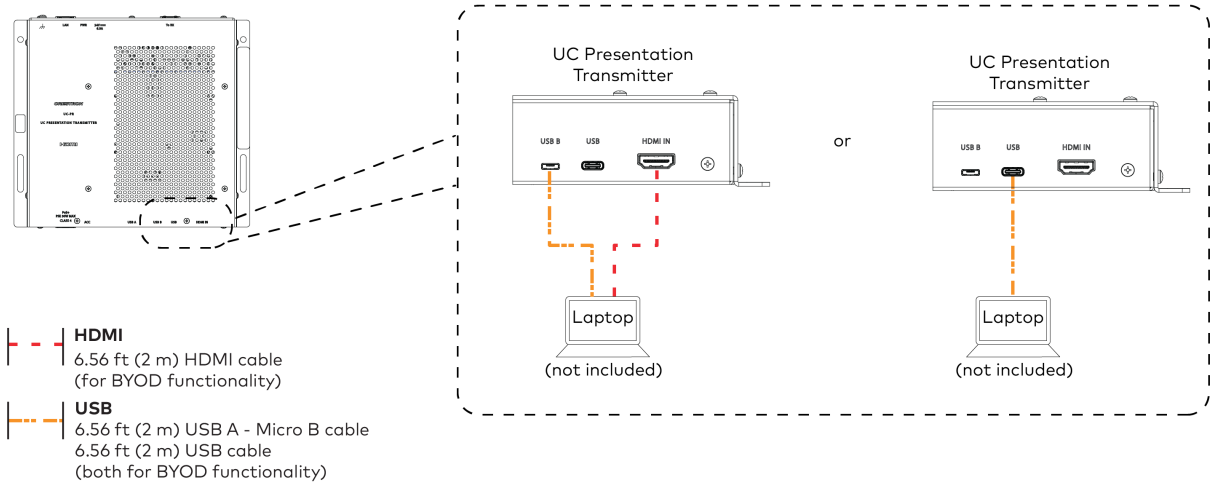

6. Bundle the cables to the bracket assembly with the integrated cable tie wraps. The cable tie wraps are reusable.

Apply Power

Press the power button on the bottom of the UC Engine and apply power to all of the other devices in the system.

Log In to the Zoom Rooms Service

Use the conference device to sign in to the Zoom Rooms service using an activation code or a Zoom Room Sign-In.

1. Tap **Zoom** and then tap **OK**. The device will reboot.
2. Enter the pairing code shown on the display to pair the device with the UC Engine. The Zoom Rooms controller app is displayed.
3. Log in to the Zoom Rooms service with an activation code or Zoom Rooms Credentials (email and password).
    - **Activation Code:**
        a. Tap **Enter Activation Code**.
        b. Enter the 16-digit activation code provided by the IT administrator managing the Zoom portal to activate the Zoom Room assigned to the activation code. The Zoom Rooms Conference Room screen is shown on the display.
    - **Sign In:**
        a. Tap **Sign In**.
        b. Enter the Zoom Room credentials and tap **Sign In**.
        c. Select the conference room name from the list and tap **Next**. The Zoom Rooms Conference Room screen is shown on the display.
4. Tap **Settings**. If a password is required, enter the password (the default password is "1234"). The **Settings** screen is displayed.
5. Tap **Microphone** and select the conference device as the source.
6. Tap **Speaker** and select the conference device as the source.
7. Tap **Meet Now** to exit.

Configure the System

Connect a USB keyboard and mouse (sold separately) to a USB port on the UC Engine to configure system features, as described in Configuration on page 553. For detailed information on using Zoom Rooms, refer to the Zoom Rooms Help Center.

Factory Reset

A factory reset may be performed when troubleshooting the conference device.

To perform a factory reset on the conference device:

1. Power cycle the device by disconnecting and reconnecting the CAT5e cable from the conference device.

2. When the device powers on and the LEDs flash green, tap the button below the Crestron® logo 10 times. A factory reset confirmation screen appears.

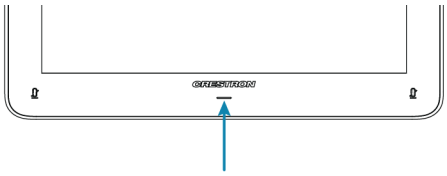

3. Tap one of the mute buttons to move the selector on the factory reset confirmation screen to **Yes**. Tap the button below the Crestron logo to confirm the factory reset.

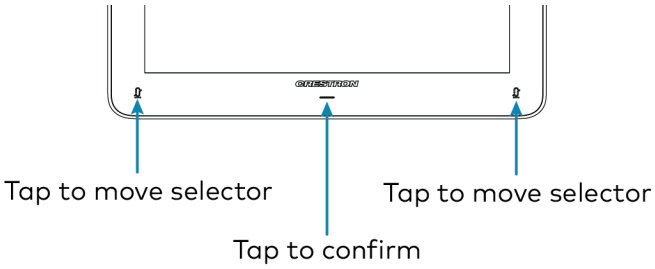

4. The device will reboot.

UC-MM30-NC-Z and UC-MM30-NC-Z-I

Minimum Requirements

Ensure that the below requirements are met prior to setting up the system.

- A certified USB Camera (not included).
- A video display (not included) connected to the UC Engine. A second or third display is optional.
- A Zoom Rooms account or activation code (not included).

> **NOTE:** Unless otherwise indicated in this section, the connection procedure is the same for UC-MM30-Z and UC-MM30-Z-I.

In The Box

Qty.	Description
	UC Bracket Assembly
1	UC Bracket Assembly with UC Engine and HDMI content ingest (UC-BRKT-200-S-Z-ASSY, 6512690)
2	Anchor, Drywall, Plastic, 3/8 in. x 1/2 in. (9.5 mm x 12.7 mm) (2052565)
1	Key, Anchor (4529654)
2	Screw, 8-AB x 1-1/2 in. (38.1 mm), Pan Head, Combo (2052567)
4	Tie Wrap (2047935)
	Mini Tabletop Conference Device
1	Flex MM Tabletop Conference Device, Microsoft Teams video (6511615 or 6511616)
1	PoE+ Injector (2055605)
2	Cable, CAT5e, RJ-45 - RJ-45, 11.8 ft (3.6 m) (2056204)
1	Cable, USB 2.0, A - Micro B, 5.8 ft (1.8 m) (2055579)
	Additional Items
1	Cable, CAT5e, RJ-45 - RJ-45, 7 ft (2.1 m) (6509924)
1	Cable, HDMI 2.1, 6 ft (1.8 m) (6512150)
1	Cable, HDMI, 20 ft (6.1 m) (6503567)
1	Cable, DisplayPort™ to HDMI, 6 ft (1.8 m) (6508282)
1	Cable, USB Extension, USB Type A Male-to-Female, 15 ft (4.6 m) (6508260)

Mount Devices

Mount the UC Bracket Assembly

Mount the UC Bracket Assembly to VESA® compliant display devices, a wall, or other building structure. Anchors and screws are supplied for installation on walls with 3/8 in. (9.5 mm) to 3/4 in. (19 mm) thickness.

CAUTION: Preinstalled screws may protrude from the back of the UC Bracket Assembly. Exercise caution when handling the UC Bracket Assembly to avoid scratching or damaging surfaces.

NOTE: The integrated cable tie wraps are reusable. Avoid damaging the cable tie wraps.

Mount the Tabletop Conference Device

The tabletop conference device can be placed on any flat surface or secured on a table using the UCA-SMK-UC2 or UCA-SMKR-UC2-3 tabletop swivel mount kit (sold separately). Refer to Quick Start: UC-2-Z(-I) for functional details.

Identify the UC Bracket Assembly

The UC Bracket Assembly is available in two models. Identify the model included with your Crestron Flex system. Tap or click the corresponding image below to navigate to the appropriate connection instructions.

UC Bracket Assembly with HD-CONV-USB-200

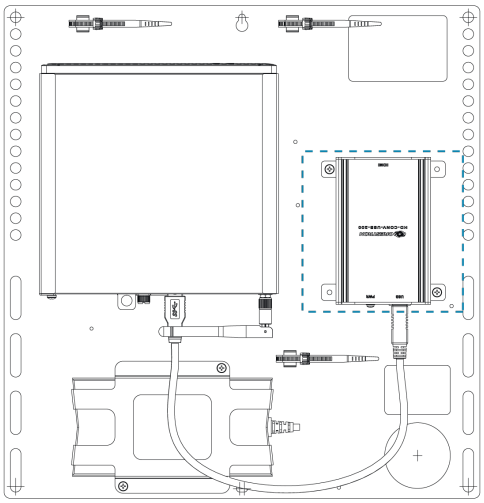

UC Bracket Assembly with HD-CONV-USB-300

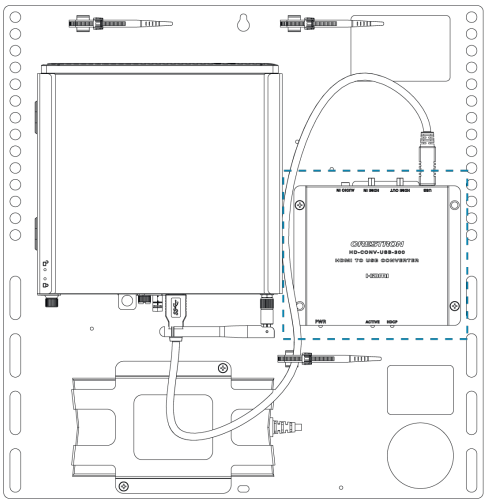

System Overview

For UC Bracket Assembly with HD-CONV-USB-200

When connections are complete, the system appears as shown below. Refer to Make Connections on page 467 for detailed connection instructions.

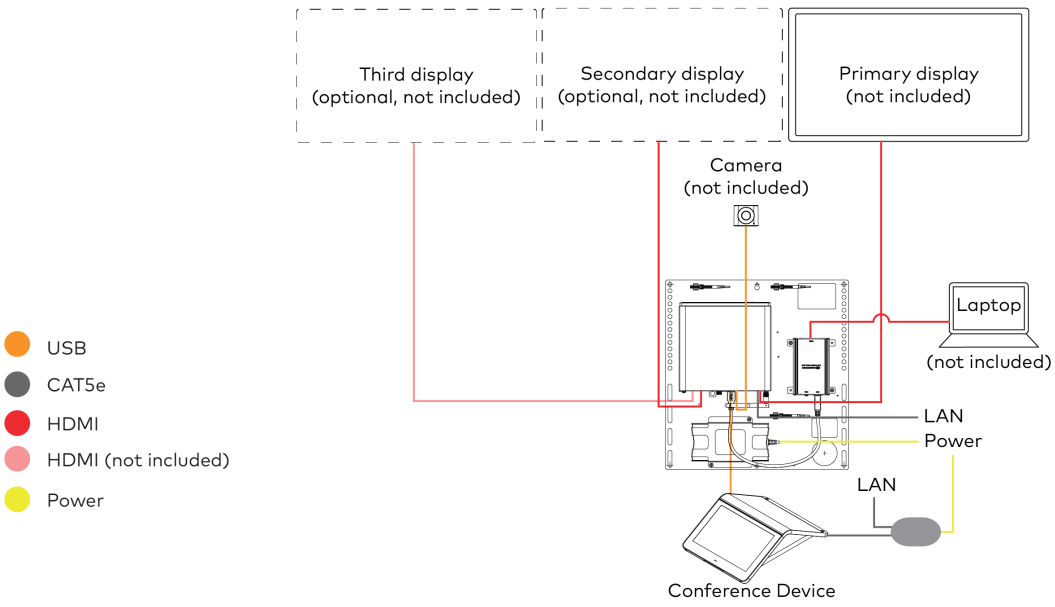

For UC Bracket Assembly with HD-CONV-USB-300

When connections are complete, the system appears as shown below. Refer to Make Connections on page 467 for detailed connection instructions.

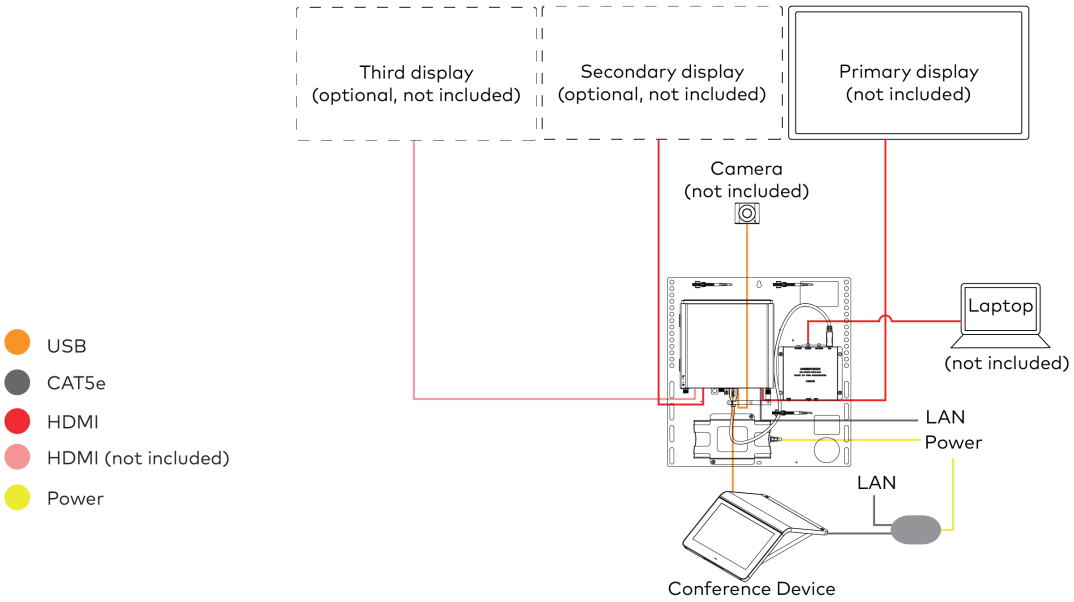

Make Connections

NOTE: For reference, the UC Bracket Assembly is shown with the HD-CONV-USB-200 in the following connection diagrams. Unless otherwise indicated in this guide, the connections remain the same for the UC Bracket Assembly with HD-CONV-USB-200 and HD-CONV-USB-300.

1. Make UC Engine connections as shown in the following illustration.

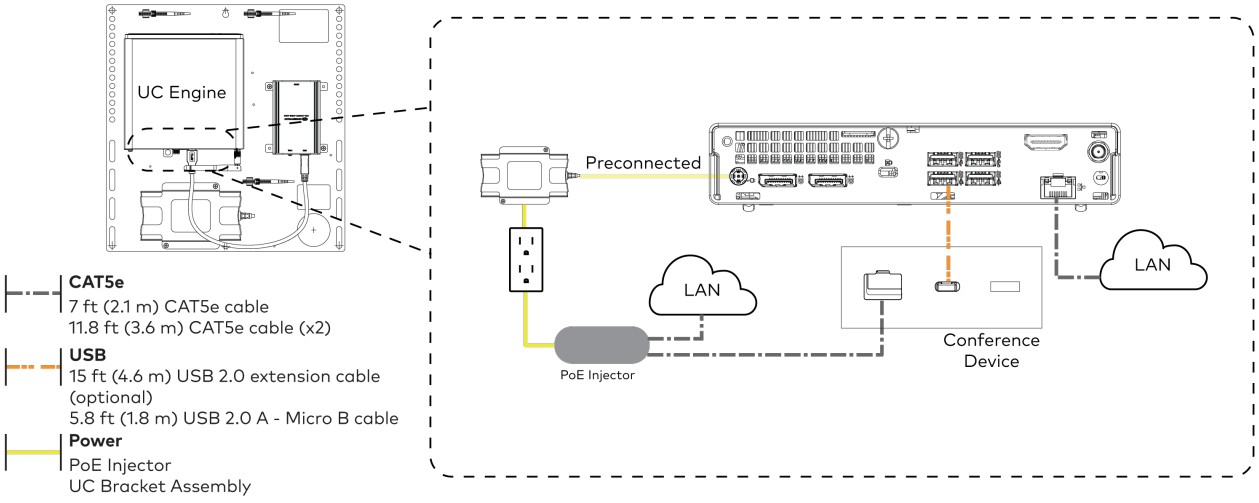

CAT5e
7 ft (2.1 m) CAT5e cable
11.8 ft (3.6 m) CAT5e cable (x2)

USB
15 ft (4.6 m) USB 2.0 extension cable (optional)
5.8 ft (1.8 m) USB 2.0 A - Micro B cable

Power
PoE Injector
UC Bracket Assembly

2. Connect displays to the UC Engine.

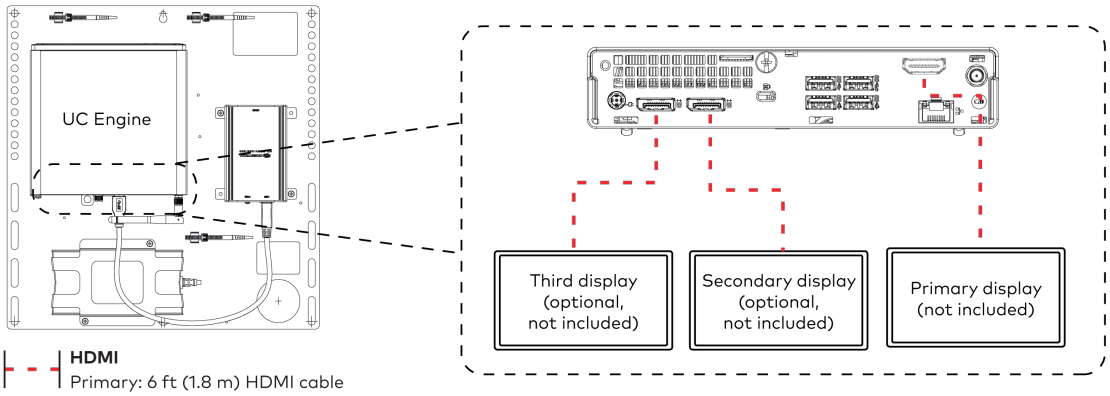

HDMI
Primary: 6 ft (1.8 m) HDMI cable
Secondary : 6 ft (1.8 m) DisplayPort to HDMI cable
Third: DisplayPort to HDMI cable (not included)

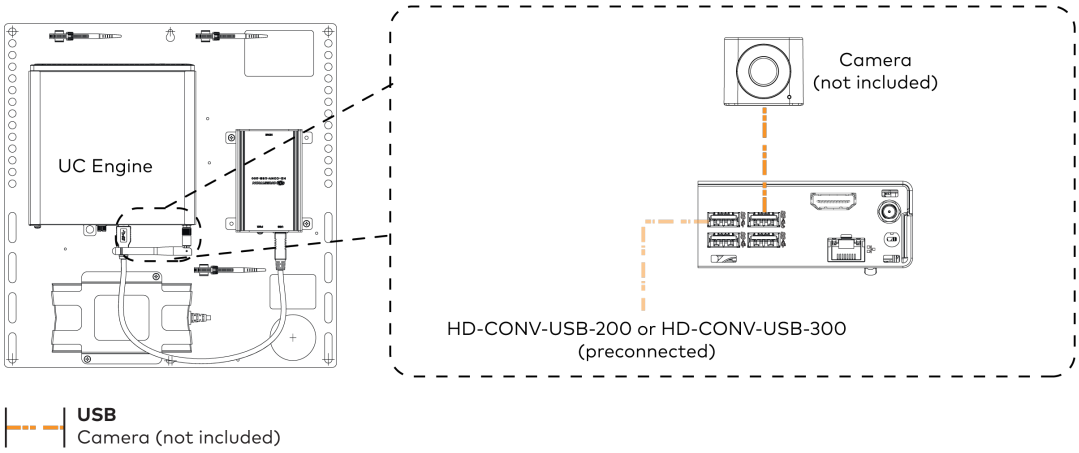

3. Connect a laptop to the HD-CONV-USB-200 or HD-CONV-USB-300.

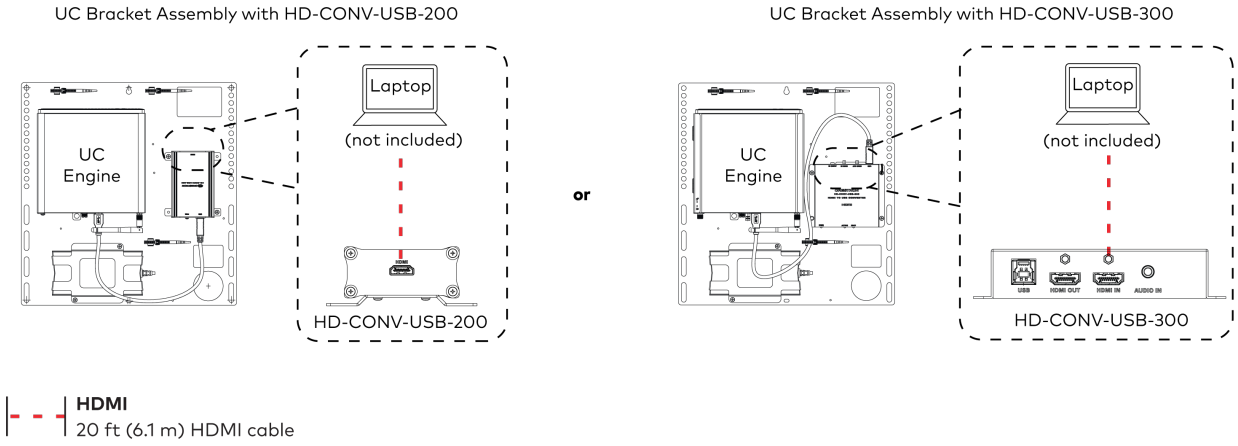

4. Bundle the cables to the bracket assembly with the integrated cable tie wraps. The cable tie wraps are reusable.

Apply Power

Press the power button on the bottom of the UC Engine and apply power to all of the other devices in the system. The connected display device will show a pairing code. The conference device will show a prompt to enter a pairing code.

Log In to the Zoom Rooms Service

Use the conference device to sign in to the Zoom Rooms service using an activation code or a Zoom Room Sign-In.

1. Tap **Zoom** and then tap **OK**. The device will reboot.
2. Enter the pairing code shown on the display to pair the device with the UC Engine. The Zoom Rooms controller app is displayed.

3. Log in to the Zoom Rooms service with an activation code or Zoom Rooms Credentials (email and password).
    - **Activation Code:**
        a. Tap **Enter Activation Code**.
        b. Enter the 16-digit activation code provided by the IT administrator managing the Zoom portal to activate the Zoom Room assigned to the activation code. The Zoom Rooms Conference Room screen is shown on the display.
    - **Sign In:**
        a. Tap **Sign In**.
        b. Enter the Zoom Room credentials and tap **Sign In**.
        c. Select the conference room name from the list and tap **Next**. The Zoom Rooms Conference Room screen is shown on the display.
4. Tap **Settings**. If a password is required, enter the password (the default password is "1234"). The **Settings** screen is displayed.
5. Tap **Microphone** and select the conference device as the source.
6. Tap **Speaker** and select the conference device as the source.
7. Tap **Meet Now** to exit.

Configure the System

Connect a USB keyboard and mouse (sold separately) to a USB port on the UC Engine to configure system features, as described in Configuration on page 553. For detailed information on using Zoom Rooms, refer to the Zoom Rooms Help Center.

Factory Reset

A factory reset may be performed when troubleshooting the conference device.

To perform a factory reset on the conference device:

1. Power cycle the device by disconnecting and reconnecting the CAT5e cable from the conference device.
2. When the device powers on and the LEDs flash green, tap the button below the Crestron® logo 10 times. A factory reset confirmation screen appears.

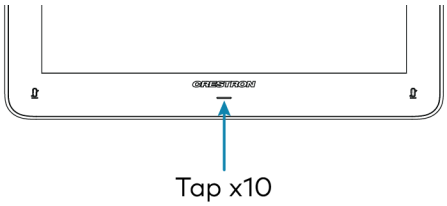

3. Tap one of the mute buttons to move the selector on the factory reset confirmation screen to **Yes**. Tap the button below the Crestron logo to confirm the factory reset.

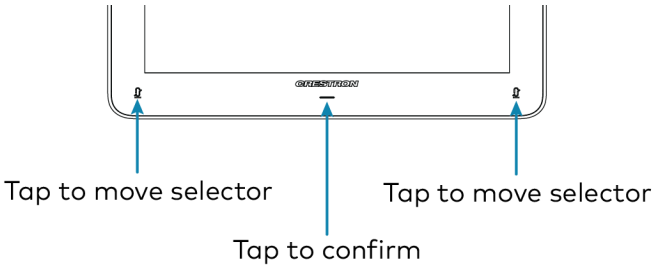

4. The device will reboot. Configure the device as described in Configure the Conference Device section.

UC-MMX30-NC-Z and UC-MMX30-NC-Z-I

Minimum Requirements

Ensure that the below requirements are met prior to setting up the system.

- A certified USB Camera (not included).
- A video display (not included) connected to the UC Engine. A second or third display is optional.
- A Zoom Rooms account or activation code (not included).

> **NOTE:** Unless otherwise indicated in this section, the connection procedure is the same for UC-MMX30-Z and UC-MMX30-Z-I.

In The Box

Qty.	Description
	UC Bracket Assembly
1	UC Bracket Assembly with UC Engine and HDMI or AV over CAT5 content ingest (UC-BRKT-260-P-Z-ASSY, 6512692)
1	Power pack (2045870)
2	Anchor, Drywall, Plastic, 3/8 in. x 1/2 in. (9.5 mm x 12.7 mm) (2052565)
1	Key, Anchor (4529654)
2	Screw, 8-AB x 1-1/2 in. (38.1 mm), Pan Head, Combo (2052567)
4	Tie Wrap (2047935)
	UC Presentation Transmitter with Cable Organizer
1	Presentation transmitter (6510936)
1	Cable Organizer
1	Power pack (2056363) with cord (2001134)
1	Bracket, power supply (2056257)
1	Cable, USB to USB, 6.56 ft (2 m) (2056116)
1	Cable, HDMI®, 6.56 ft (2 m) (2056117)
1	Cable, USB 2.0, A to Micro B, 6.56 ft (2 m) (2055504)
8	Screw, 10-9 x 5/8 in. (15.9 mm), Pan Head, Phillips, Black (2054365)
	Mini Tabletop Conference Device
1	Flex MM Tabletop Conference Device, Microsoft Teams video (6511615 or 6511616)
1	PoE+ Injector (2055605)
2	Cable, CAT5e, RJ-45 - RJ-45, 11.8 ft (3.6 m) (2056204)
1	Cable, USB 2.0, A - Micro B, 5.8 ft (1.8 m) (2055579)
	Additional Items
2	Cable, CAT6a, RJ-45 - RJ-45, 20 ft (6.1 m) (6507640)
1	Cable, CAT5e, RJ-45 - RJ-45, 7 ft (2.1 m) (6509924)
1	Cable, HDMI 2.1, 6 ft (1.8 m) (6512150)
1	Cable, DisplayPort™ to HDMI, 6 ft (1.8 m) (6508282)

Mount Devices

Mount the UC Bracket Assembly

Mount the UC Bracket Assembly to VESA® compliant display devices, a wall, or other building structure. Anchors and screws are supplied for installation on walls with 3/8 in. (9.5 mm) to 3/4 in. (19 mm) thickness.

CAUTION: Preinstalled screws may protrude from the back of the UC Bracket Assembly. Exercise caution when handling the UC Bracket Assembly to avoid scratching or damaging surfaces.

NOTE: The integrated cable tie wraps are reusable. Avoid damaging the cable tie wraps.

Mount the UC Presentation Transmitter

Mount the UC Presentation Transmitter to the underside of a table using the supplied screws. The supplied screws support installation on tables with a thickness of 1 in. (25.4 mm) minimum.

Mount the Cable Organizer for the UC-PR

Mount the Cable Organizer according to the Cable Organizer for the UC-PR (Doc. 8966).

Mount the Tabletop Conference Device

The tabletop conference device can be placed on any flat surface or secured on a table using the UCA-SMK-UC2 or UCA-SMKR-UC2-3 tabletop swivel mount kit (sold separately). Refer to Quick Start: UC-2-Z(-I) for functional details.

System Overview

When connections are complete, the system appears as shown below. The laptop connections shown below may vary based on the selected connection method. Refer to Make Connections on page 474 for detailed connection instructions.

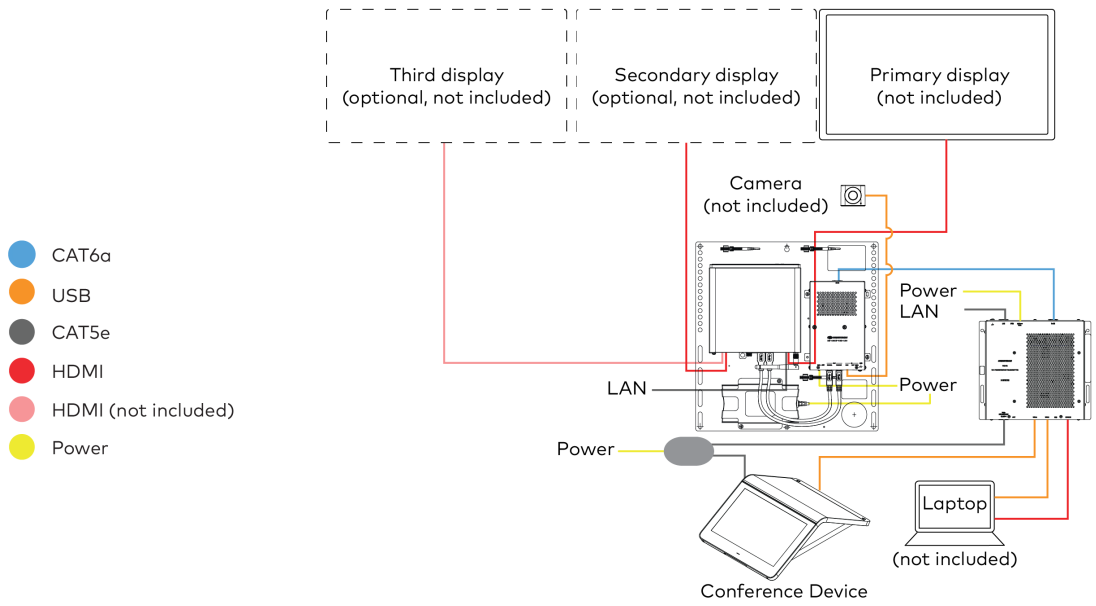

Make Connections

1. Make UC Engine connections as shown in the following illustration.

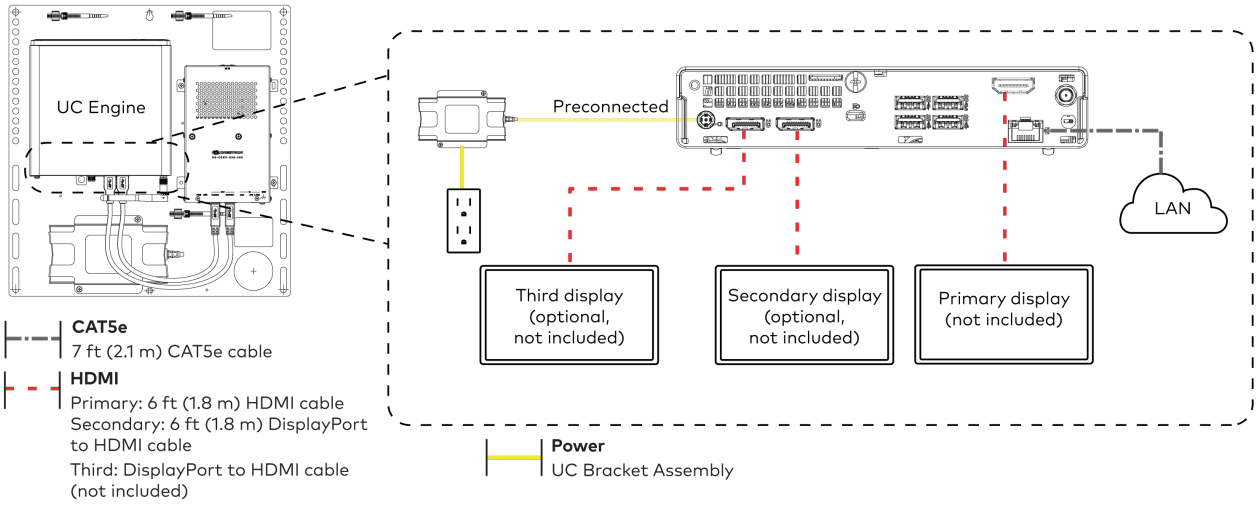

2. Connect the power supply and camera (not included) to the bottom of the content ingest device (HD-CONV-USB-260). Connect the power supply to an AC power outlet.

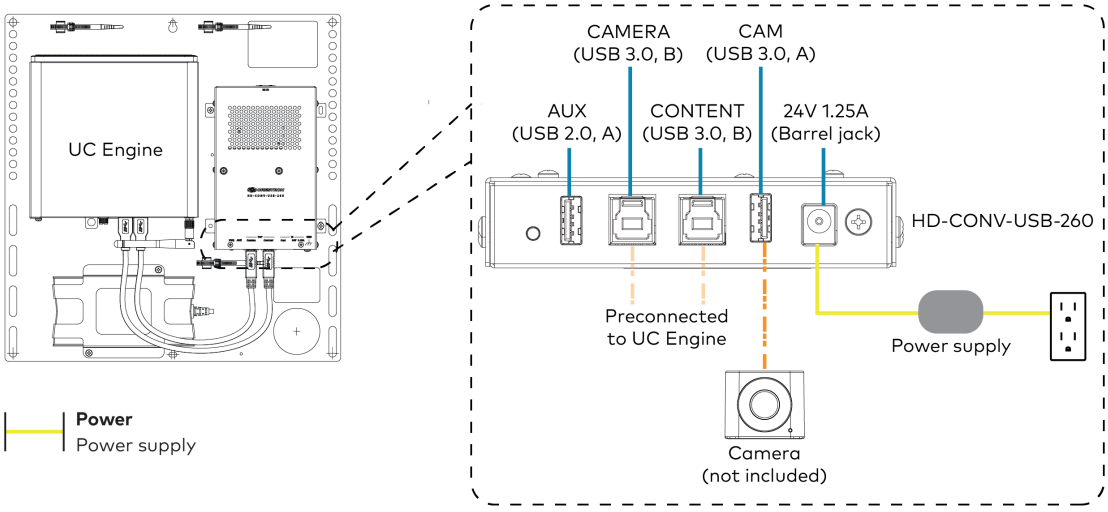

3. Connect power, the content ingest device (HD-CONV-USB-260), and LAN to the top of the UC Presentation Transmitter.

NOTE: If a longer cable between the UC Presentation Transmitter and the HD-CONV-USB-260 is needed, use a DigitalMedia™ Ultra cable only. The maximum supported cable length is 300 ft (91.4 m).

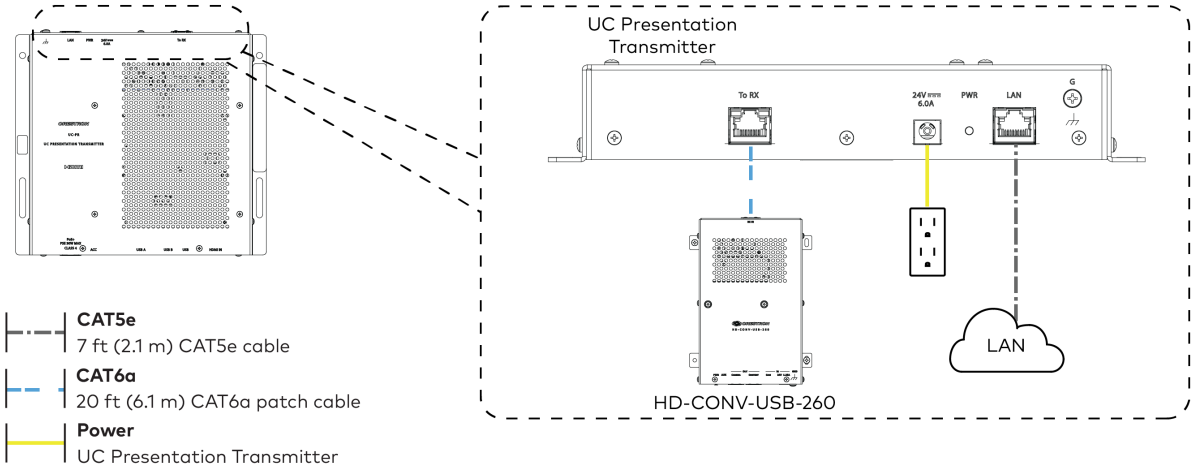

4. Connect the conference device using the included PoE+ injector and USB A to Micro-B cable to the bottom of the UC Presentation Transmitter.

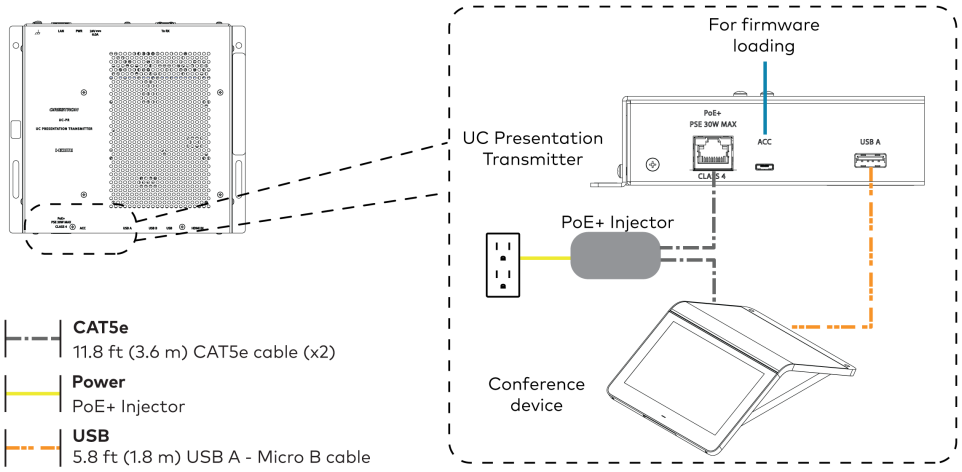

5. Connect a laptop to either the USB port or both the HDMI and USB B ports on the bottom of the UC Presentation Transmitter. Select a connection type based on the available ports on the user's laptop.

> **NOTE:**
>
> - When connecting a laptop for BYOD presentation, select the audio source on the connected laptop.

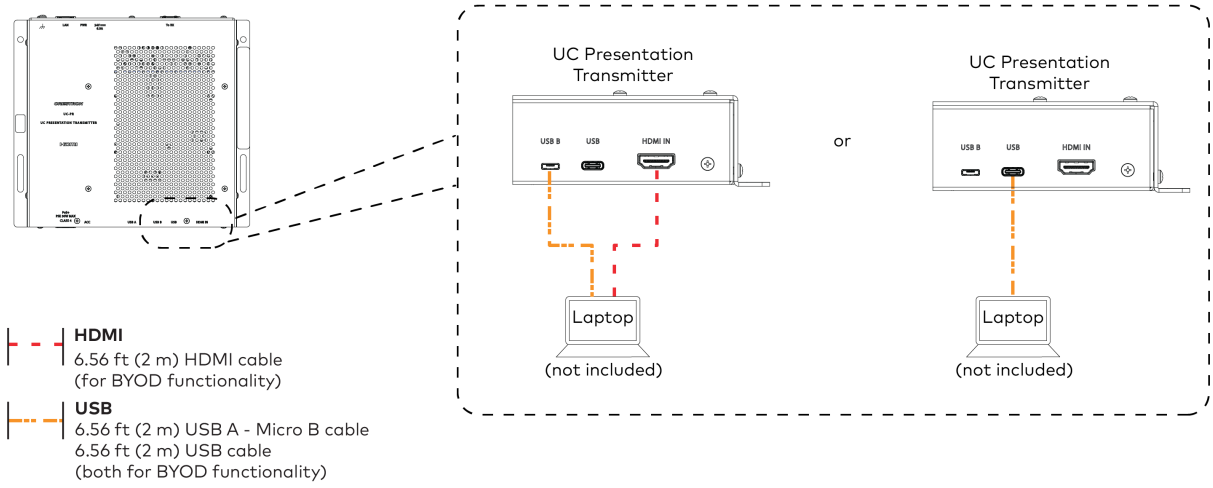

6. Bundle the cables to the bracket assembly with the integrated cable tie wraps. The cable tie wraps are reusable.

Apply Power

Press the power button on the bottom of the UC Engine and apply power to all of the other devices in the system.

Log In to the Zoom Rooms Service

Use the conference device to sign in to the Zoom Rooms service using an activation code or a Zoom Room Sign-In.

1. Tap **Zoom** and then tap **OK**. The device will reboot.
2. Enter the pairing code shown on the display to pair the device with the UC Engine. The Zoom Rooms controller app is displayed.
3. Log in to the Zoom Rooms service with an activation code or Zoom Rooms Credentials (email and password).
    - **Activation Code:**
        a. Tap **Enter Activation Code**.
        b. Enter the 16-digit activation code provided by the IT administrator managing the Zoom portal to activate the Zoom Room assigned to the activation code. The Zoom Rooms Conference Room screen is shown on the display.
    - **Sign In:**
        a. Tap **Sign In**.
        b. Enter the Zoom Room credentials and tap **Sign In**.
        c. Select the conference room name from the list and tap **Next**. The Zoom Rooms Conference Room screen is shown on the display.
4. Tap **Settings**. If a password is required, enter the password (the default password is "1234"). The **Settings** screen is displayed.
5. Tap **Microphone** and select the conference device as the source.
6. Tap **Speaker** and select the conference device as the source.
7. Tap **Meet Now** to exit.

Configure the System

Connect a USB keyboard and mouse (sold separately) to a USB port on the UC Engine to configure system features, as described in Configuration on page 553. For detailed information on using Zoom Rooms, refer to the Zoom Rooms Help Center.

Factory Reset

A factory reset may be performed when troubleshooting the conference device.

To perform a factory reset on the conference device:

1. Power cycle the device by disconnecting and reconnecting the CAT5e cable from the conference device.

2. When the device powers on and the LEDs flash green, tap the button below the Crestron® logo 10 times. A factory reset confirmation screen appears.

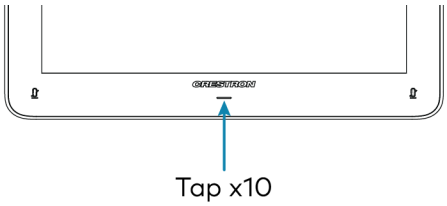

3. Tap one of the mute buttons to move the selector on the factory reset confirmation screen to **Yes**. Tap the button below the Crestron logo to confirm the factory reset.

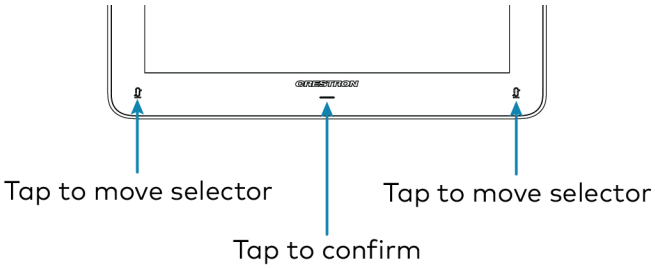

4. The device will reboot.

UC-M50-Z

Minimum Requirements

Ensure that the below requirements are met prior to setting up the system.

- A video display (not included) connected to the UC Engine. A second display is optional.
- A Zoom Rooms account or activation code (not included).

In The Box

Qty.	Description
	UC Bracket Assembly
1	UC Bracket Assembly with UC Engine and HDMI content ingest (UC-BRKT-200-S-Z-ASSY, 6512690)
2	Anchor, Drywall, Plastic, 3/8 in. x 1/2 in. (9.5 mm x 12.7 mm) (2052565)
1	Key, Anchor (4529654)
2	Screw, 8-AB x 1-1/2 in. (38.1 mm), Pan Head, Combo (2052567)
4	Tie Wrap (2047935)
	Mercury Tabletop Conference Device
1	Tabletop Conference Device, Microsoft Teams video (6508227)
1	Cable, CAT5e, RJ-45 - RJ-45, 12 ft (3.7 m) (2033988)
1	Cable Retention Plate (2047908)
3	Tie Wrap (2047935)
	Camera
1	Collaboration camera (6510482)
1	Camera wall mount kit (6510998)
	Additional Items
1	Cable, CAT5e, RJ-45 - RJ-45, 7 ft (2.1 m) (6509924)
1	Cable, HDMI 2.1, 6 ft (1.8 m) (6512150)
1	Cable, HDMI, 20 ft (6.1 m) (6503567)
1	Cable, DisplayPort™ to HDMI, 6 ft (1.8 m) (6508282)
1	Cable, USB Extension, USB Type A Male-to-Female, 15 ft (4.6 m) (6508260)
1	Cable, USB 3.0, Right angle USB-C to A, 6 ft (1.8 m) (6511591)
1	Cable, USB 2.0, A - Micro-B, 6 ft (1.8 m) (6510947)
1	Power supply (6500187)

Mount Devices

Mount the UC Bracket Assembly

Mount the UC Bracket Assembly to VESA® compliant display devices, a wall, or other building structure. Anchors and screws are supplied for installation on walls with 3/8 in. (9.5 mm) to 3/4 in. (19 mm) thickness.

CAUTION: Preinstalled screws may protrude from the back of the UC Bracket Assembly. Exercise caution when handling the UC Bracket Assembly to avoid scratching or damaging surfaces.

NOTE: The integrated cable tie wraps are reusable. Avoid damaging the cable tie wraps.

Mount the Camera

Mount the included camera according to the UC-CAM-WMK Quick Start (Doc. 8257).

Mount the Tabletop Conference Device

The tabletop conference device can be placed on any flat surface or secured on a table using the CCS-UCA-SMK tabletop swivel mount kit (sold separately).

Install the Cable Retention Plate

The included cable retention plate provides tie-down points for cables that connect to the Crestron® conference device.

Remove the adhesive backing from the cable retention plate and install the plate on the underside of the conference device as shown in the following diagram. Ensure the cable retention plate is firmly attached before securing cables.

CAUTION: When turning over the device, place the device on a soft surface to avoid damage.

NOTE: If a swivel mount kit (CCS-UCA-SMK) is to be used, use the cable retention bracket included with the swivel mount kit as described in the CCS-UCA-SMK DO Guide (Doc. 7882).

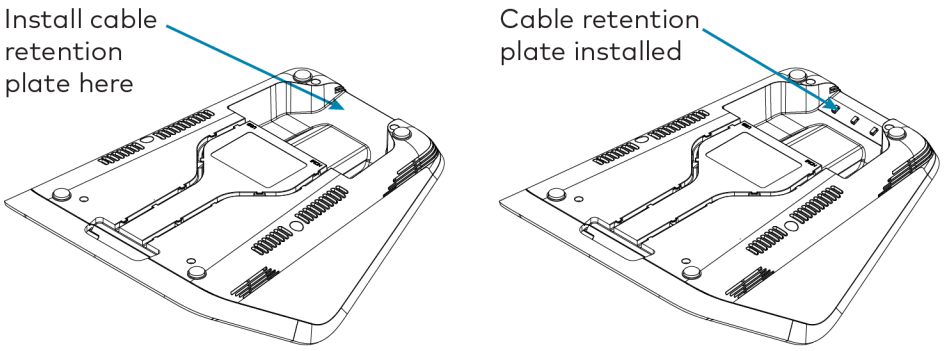

Identify the UC Bracket Assembly

The UC Bracket Assembly is available in two models. Identify the model included with your Crestron Flex system. Tap or click the corresponding image below to navigate to the appropriate connection instructions.

UC Bracket Assembly with HD-CONV-USB-200

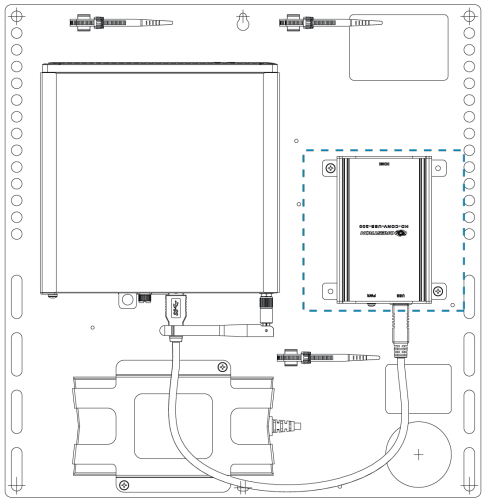

UC Bracket Assembly with HD-CONV-USB-300

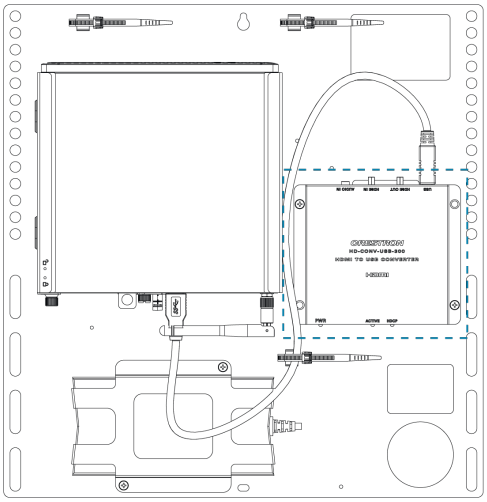

System Overview

For UC Bracket Assembly with HD-CONV-USB-200

When connections are complete, the system appears as shown below. Refer to Make Connections on page 482 for detailed connection instructions.

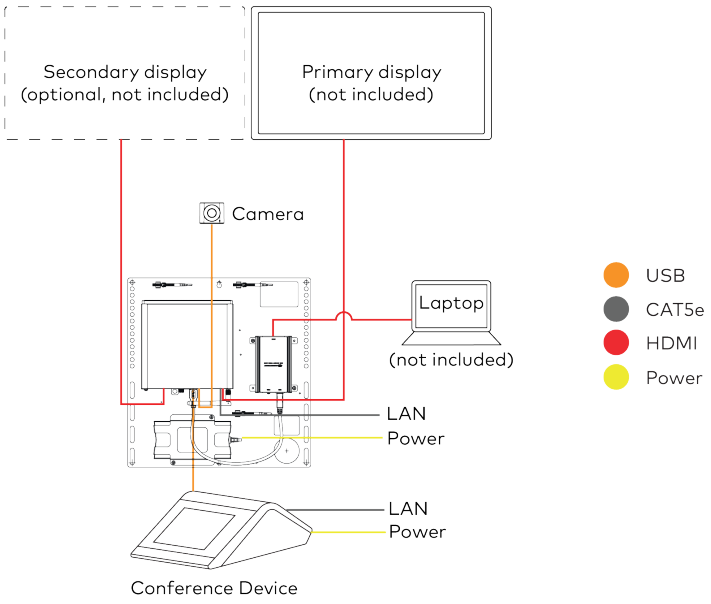

For UC Bracket Assembly with HD-CONV-USB-300

When connections are complete, the system appears as shown below. Refer to Make Connections on page 482 for detailed connection instructions.

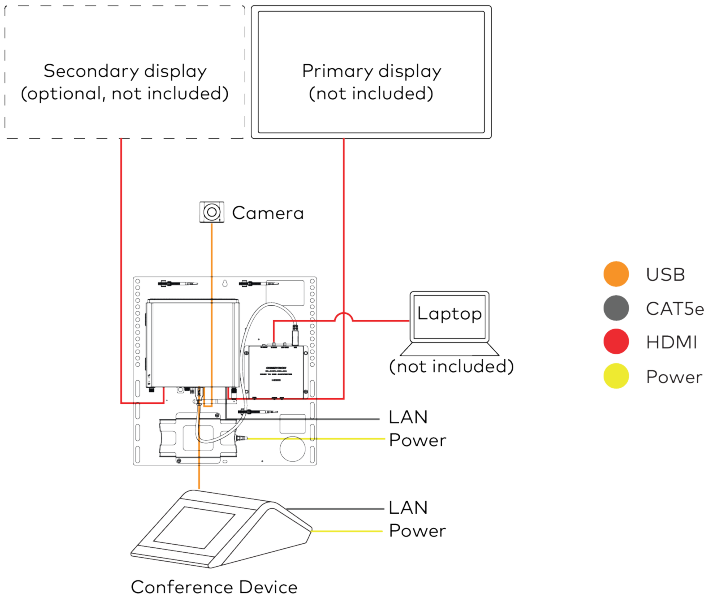

Make Connections

NOTE: For reference, the UC Bracket Assembly is shown with the HD-CONV-USB-200 in the following connection diagrams. Unless otherwise indicated in this guide, the connections remain the same for the UC Bracket Assembly with HD-CONV-USB-200 and HD-CONV-USB-300.

1. Make UC Engine connections as shown in the following illustration.

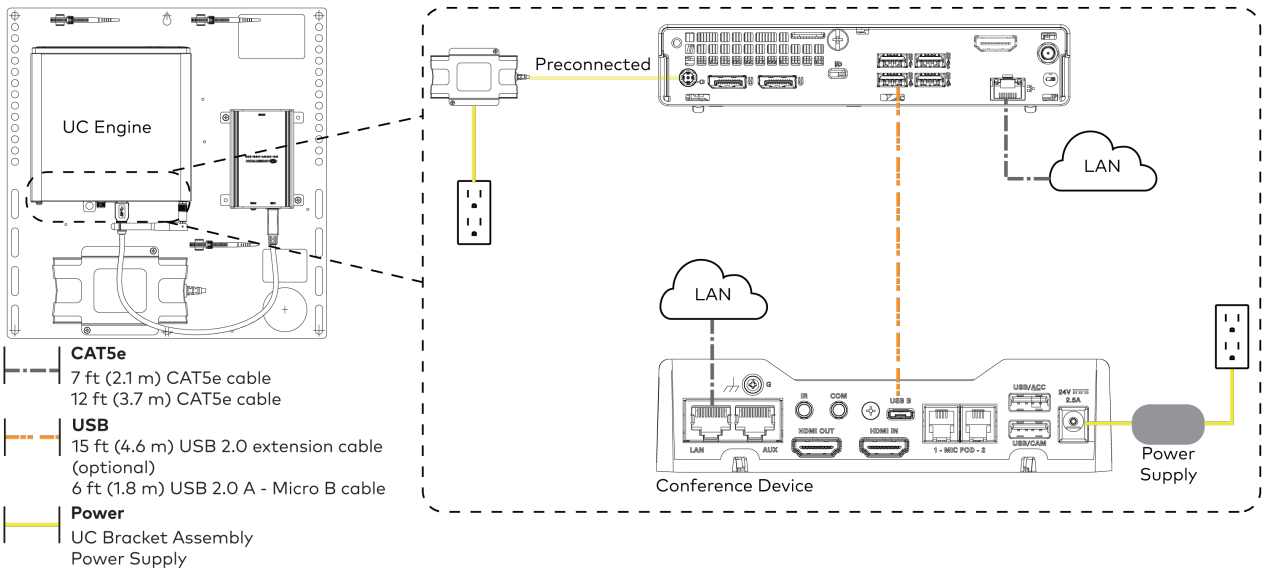

2. Connect displays to the UC Engine.

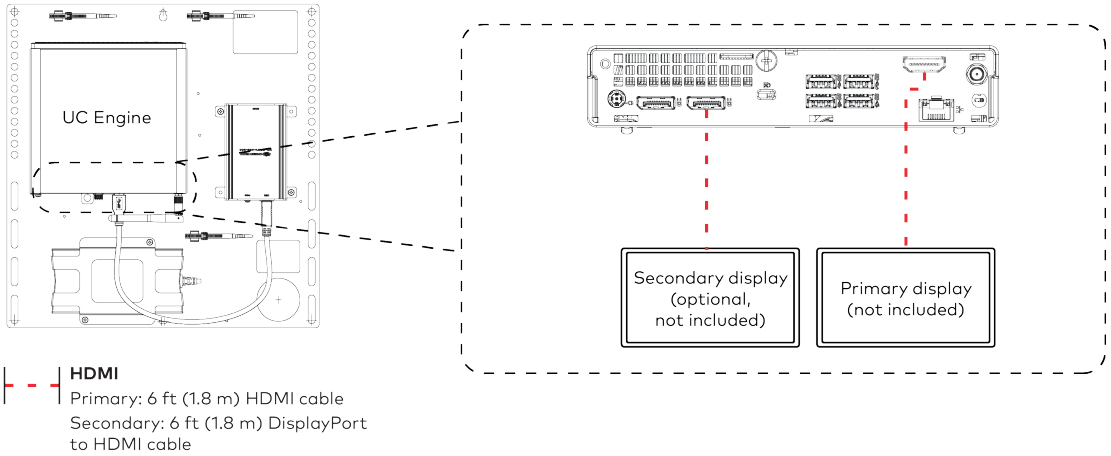

3. Connect the camera to the UC Engine as shown in the image below. Do not connect the camera to any of the other USB ports.

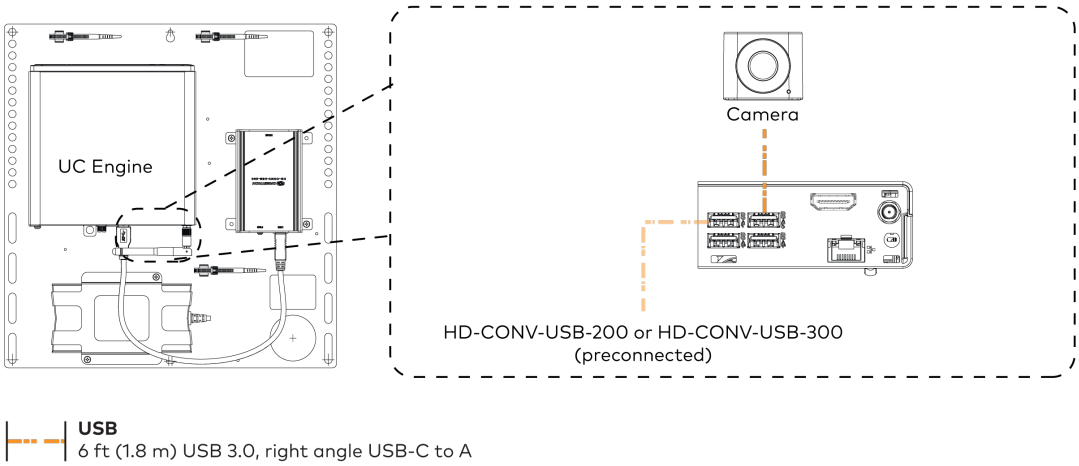

4. Connect a laptop to the HD-CONV-USB-200 or HD-CONV-USB-300.

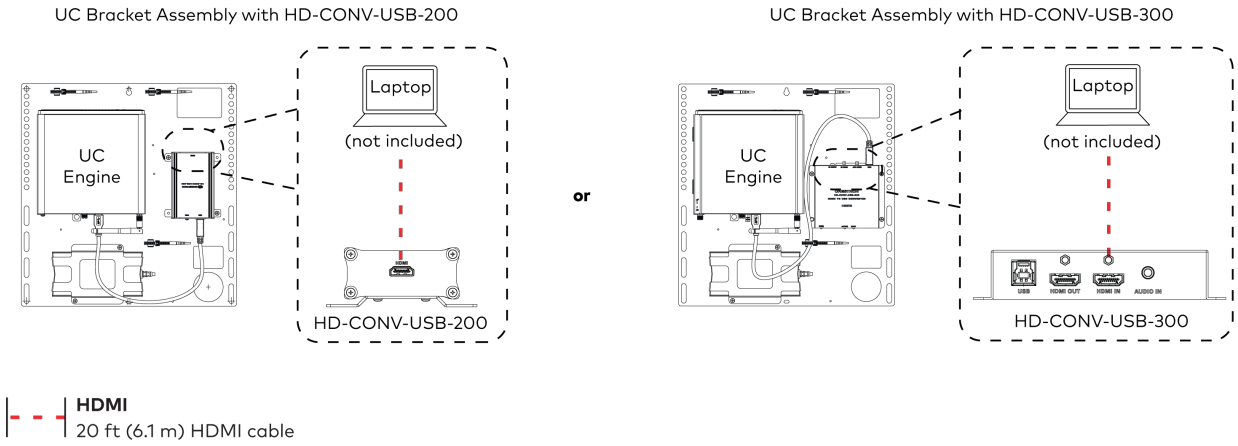

5. Bundle the cables to the bracket assembly with the integrated cable tie wraps. The cable tie wraps are reusable.

Bundle Cables

Bundle the cables together and use a provided tie wrap to secure the bundle to one of the positions on the cable retention plate at the rear of the device. Avoid bundling power and data cables together.

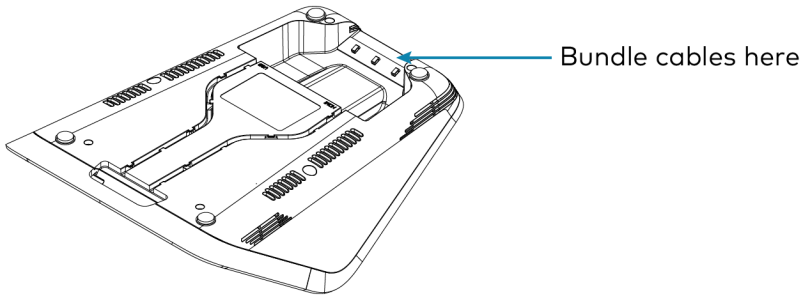

Apply Power

Press the power button on the bottom of the UC Engine and apply power to all of the other devices in the system.

Configure the Conference Device

1. On a computer, enter the IP address displayed on the conference device into a web browser.

> **NOTES:**
>
> - The device and computer must be on the same network switch and VLAN.
> - A login with administrative rights for the device is required.

2. Enter the following information in the appropriate fields:
   - **UC-Engine Address:** Enter the IP address or hostname of the UC Engine.

     NOTE: The hostname is printed on a label affixed to the UC Engine.

   - **UC-Engine Port**: By default, port number 49500 is used. If a different port number has been configured on the UC Engine, enter that port number instead.
   - **UC-Engine Admin Username**: Enter the username for the UC Engine. The default username is "admin".
   - **UC-Engine Admin Password**: Enter the login password for the UC Engine. The default password is "crestron".
3. Select **Save Changes.**
4. On the UC Engine, connect a USB keyboard and mouse (not included) to sign in to the Zoom Rooms service with an activation code or sign-in credentials (email and password).

   NOTE: The Zoom Rooms Video mode allows sign-in only through the UC Engine. Therefore, to view the following instructions, use the conference room display connected to the UC Engine.

   - **Activation Code:**
     a. Select **Enter Activation Code**.
     b. Enter the 16-digit activation code provided by the IT administrator managing the Zoom portal to activate the Zoom Room assigned to the activation code. The Zoom Rooms Conference Room screen is shown on the display.
   - **Sign In:**
     a. Select **Sign In**.
     b. Enter the Zoom Room credentials and tap **Sign In**.
     c. Select the conference room name from the list and tap **Next**. The Zoom Rooms Conference Room screen is shown on the display.
5. Visit the Zoom portal, navigate to **Room Management** > **Zoom Rooms** > **(Room Name)** > **Room Settings** > **Rooms Profile** > **Devices**.
6. Enable the **Use Windows-attached Zoom Rooms Controller with specific Windows Monitor Hardware IDs** setting. Then, copy and paste the following string into the text field: Crestron:TCT009A,Crestron:FUN0216,Crestron:FUN0270

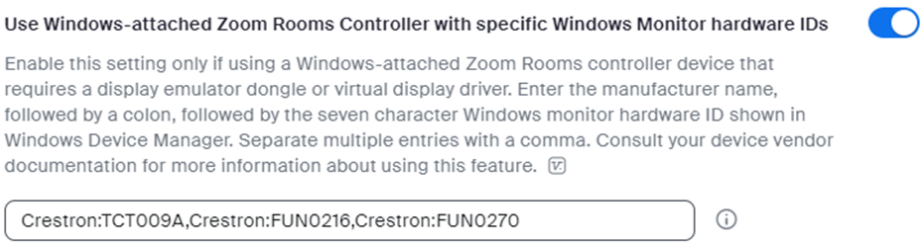

7. On the conference device, tap **Settings**. If a password is required, enter the password (the default password is "1234"). The **Settings** screen is displayed.
8. Tap **Microphone** and select the conference device as the source.

9. Tap **Speaker** and select the conference device as the source.
10. Tap **Home** to exit.

Configure the System

Refer to the Configuration on page 553 section to configure system features.

For detailed information on using Zoom Rooms, refer to the Zoom Rooms Help Center.

UC-MX50-Z

Minimum Requirements

Ensure that the below requirements are met prior to setting up the system.

- A video display (not included) connected to the UC Engine. A second display is optional.
- A Zoom Rooms account or activation code (not included).

In The Box

Qty.	Description
	UC Bracket Assembly
1	UC Bracket Assembly with UC Engine and HDMI or AV over CAT5 content ingest (UC-BRKT-260-P-Z-ASSY, 6512692)
1	Power pack (2045870)
2	Anchor, Drywall, Plastic, 3/8 in. x 1/2 in. (9.5 mm x 12.7 mm) (2052565)
1	Key, Anchor (4529654)
2	Screw, 8-AB x 1-1/2 in. (38.1 mm), Pan Head, Combo (2052567)
4	Tie Wrap (2047935)
	Mercury X Tabletop Conference Device
1	Tabletop Conference Device, Microsoft Teams video (6510610)
1	Cable, CAT5e, RJ-45 - RJ-45, 12 ft (3.7 m) (2033988)
1	Cable Retention Plate (2047908)
1	Power supply (2045873) with cord (2042043)
3	Tie Wrap (2047935)
	Camera
1	Collaboration camera (6510482)
1	Camera wall mount kit (6510998)
	Additional Items
2	Cable, CAT6a, RJ-45 - RJ-45, 20 ft (6.1 m) (6507640)
1	Cable, CAT5e, RJ-45 - RJ-45, 7 ft (2.1 m) (6509924)
1	Cable, HDMI 2.1, 6 ft (1.8 m) (6512150)
1	Cable, DisplayPort™ to HDMI, 6 ft (1.8 m) (6508282)
1	Cable, USB 3.0, Right angle USB-C to A, 6 ft (1.8 m) (6511591)
1	Cable, USB 2.0, A - Micro-B, 6 ft (1.8 m) (6510947)
1	Cable, thin HDMI, 6 ft (1.8 m) (6510946)

Mount Devices

Mount the UC Bracket Assembly

Mount the UC Bracket Assembly to VESA® compliant display devices, a wall, or other building structure. Anchors and screws are supplied for installation on walls with 3/8 in. (9.5 mm) to 3/4 in. (19 mm) thickness.

CAUTION: Preinstalled screws may protrude from the back of the UC Bracket Assembly. Exercise caution when handling the UC Bracket Assembly to avoid scratching or damaging surfaces.

NOTE: The integrated cable tie wraps are reusable. Avoid damaging the cable tie wraps.

Mount the Camera

Mount the included camera according to the UC-CAM-WMK Quick Start (Doc. 8257).

Mount the Tabletop Conference Device

The tabletop conference device can be placed on any flat surface or secured on a table using the CCS-UCA-SMK tabletop swivel mount kit (sold separately).

System Overview

When connections are complete, the system appears as shown below. Refer to Make Connections on page 490 for detailed connection instructions.

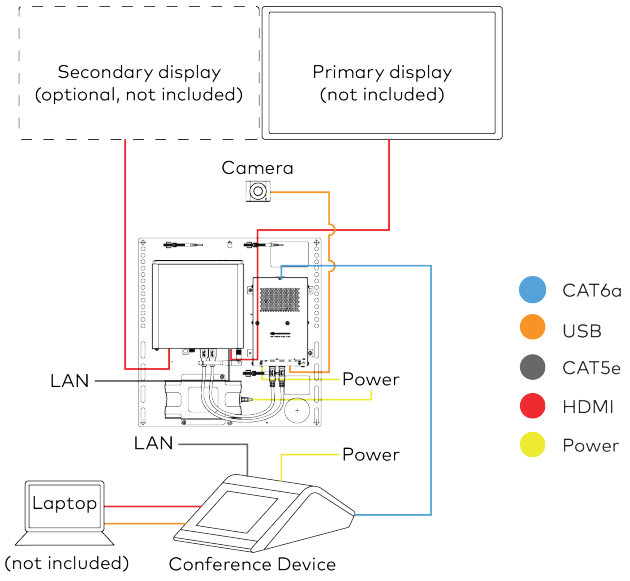

Make Connections

1. Make UC Engine connections as shown in the following illustration.

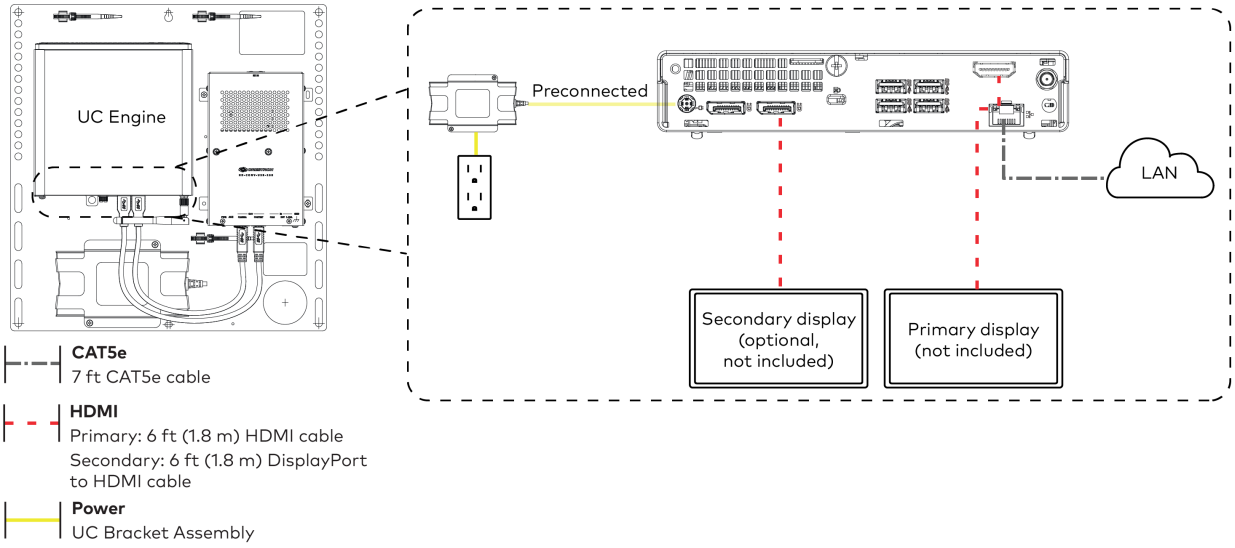

2. Make network, content ingest, laptop, and power connections on the bottom of the conference device. Connect the conference device's power supply to an AC power outlet.

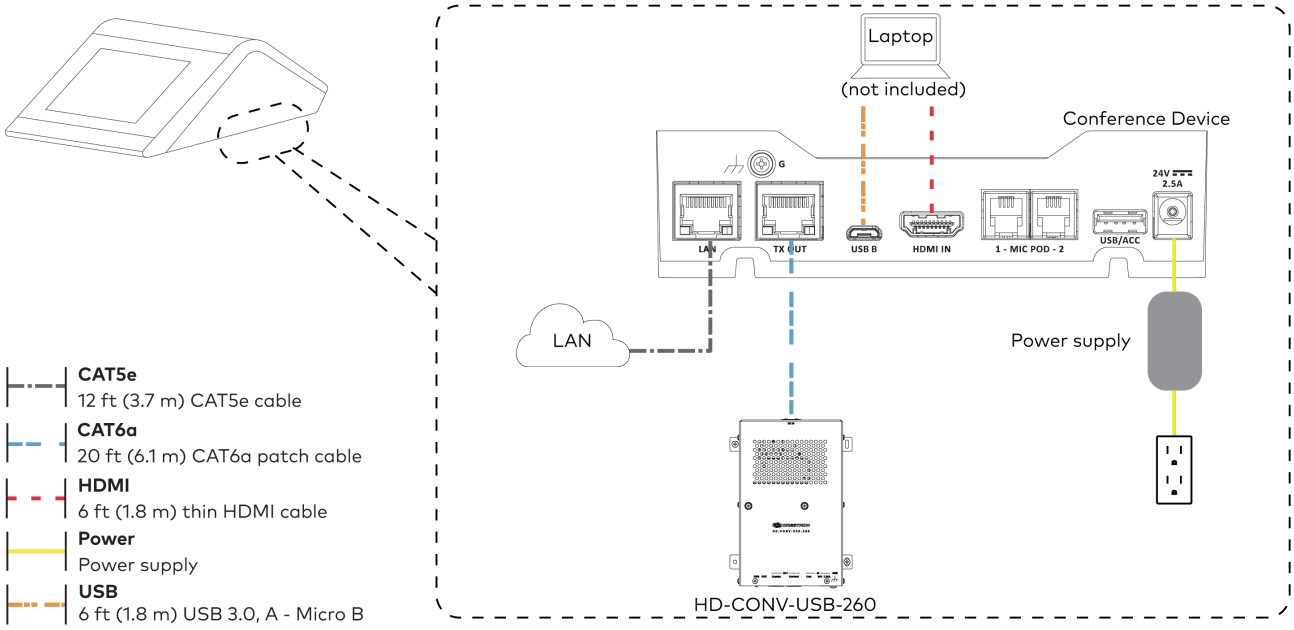

3. Connect the power supply and camera to the bottom of the content ingest device (HD-CONV-USB-260). Connect the power supply to an AC power outlet.

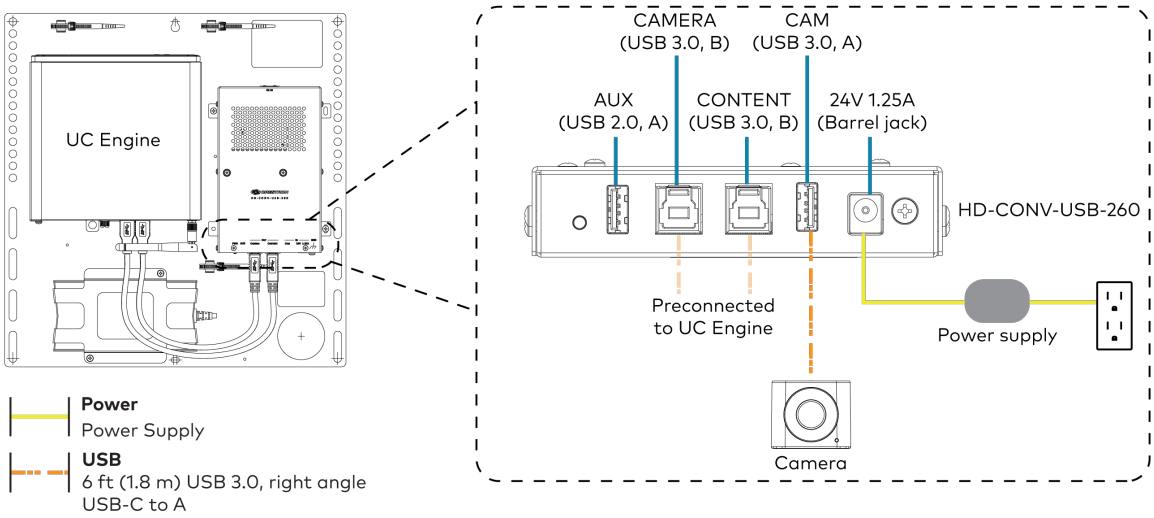

4. Bundle the cables to the bracket assembly with the integrated cable tie wraps. The cable tie wraps are reusable.

Apply Power

Press the power button on the bottom of the UC Engine and apply power to all of the other devices in the system.

Configure the Conference Device

1. On a computer, enter the IP address displayed on the conference device into a web browser.

   NOTES:
   - The device and computer must be on the same network switch and VLAN.
   - A login with administrative rights for the device is required.

2. Enter the following information in the appropriate fields:
   - **UC-Engine Address:** Enter the IP address or hostname of the UC Engine.

     NOTE: The hostname is printed on a label affixed to the UC Engine.

   - **UC-Engine Port**: By default, port number 49500 is used. If a different port number has been configured on the UC Engine, enter that port number instead.
   - **UC-Engine Admin Username**: Enter the username for the UC Engine. The default username is "admin".
   - **UC-Engine Admin Password**: Enter the login password for the UC Engine. The default password is "crestron".
3. Select **Save Changes.**

4. On the UC Engine, connect a USB keyboard and mouse (not included) to sign in to the Zoom Rooms service with an activation code or sign-in credentials (email and password).

   > **NOTE:** The Zoom Rooms Video mode allows sign-in only through the UC Engine. Therefore, to view the following instructions, use the conference room display connected to the UC Engine.

   - **Activation Code:**
     a. Select **Enter Activation Code**.
     b. Enter the 16-digit activation code provided by the IT administrator managing the Zoom portal to activate the Zoom Room assigned to the activation code. The Zoom Rooms Conference Room screen is shown on the display.
   - **Sign In:**
     a. Select **Sign In**.
     b. Enter the Zoom Room credentials and tap **Sign In**.
     c. Select the conference room name from the list and tap **Next**. The Zoom Rooms Conference Room screen is shown on the display.
5. Visit the Zoom portal, navigate to **Room Management** > **Zoom Rooms** > **(Room Name)** > **Room Settings** > **Rooms Profile** > **Devices**.
6. Enable the **Use Windows-attached Zoom Rooms Controller with specific Windows Monitor Hardware IDs** setting. Then, copy and paste the following string into the text field: Crestron:TCT009A,Crestron:FUN0216,Crestron:FUN0270

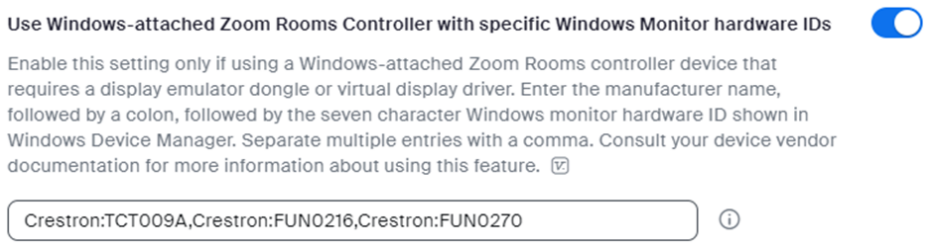

7. On the conference device, tap **Settings**. If a password is required, enter the password (the default password is "1234"). The **Settings** screen is displayed.
8. Tap **Microphone** and select the conference device as the source.
9. Tap **Speaker** and select the conference device as the source.
10. Tap **Home** to exit.

Configure the System

Refer to the Configuration on page 553 section to configure system features.

For detailed information on using Zoom Rooms, refer to the Zoom Rooms Help Center.

UC-M50-NC-Z

Minimum Requirements

Ensure that the below requirements are met prior to setting up the system.

- A certified USB Camera (not included).
- A video display (not included) connected to the UC Engine. A second display is optional.
- A Zoom Rooms account or activation code (not included).

In The Box

Qty.	Description
	UC Bracket Assembly
1	UC Bracket Assembly with UC Engine and HDMI content ingest (UC-BRKT-200-S-Z-ASSY, 6512690)
2	Anchor, Drywall, Plastic, 3/8 in. x 1/2 in. (9.5 mm x 12.7 mm) (2052565)
1	Key, Anchor (4529654)
2	Screw, 8-AB x 1-1/2 in. (38.1 mm), Pan Head, Combo (2052567)
4	Tie Wrap (2047935)
	Mercury Tabletop Conference Device
1	Tabletop Conference Device, Microsoft Teams video (6508227)
1	Cable, CAT5e, RJ-45 - RJ-45, 12 ft (3.7 m) (2033988)
1	Cable Retention Plate (2047908)
3	Tie Wrap (2047935)
	Additional Items
1	Cable, CAT5e, RJ-45 - RJ-45, 7 ft (2.1 m) (6509924)
1	Cable, HDMI 2.1, 6 ft (1.8 m) (6512150)
1	Cable, HDMI, 20 ft (6.1 m) (6503567)
1	Cable, DisplayPort™ to HDMI, 6 ft (1.8 m) (6508282)
1	Cable, USB Extension, USB Type A Male-to-Female, 15 ft (4.6 m) (6508260)
1	Cable, USB 2.0, A - Micro-B, 6 ft (1.8 m) (6510947)
1	Power supply (6500187)

Mount Devices

Mount the UC Bracket Assembly

Mount the UC Bracket Assembly to VESA® compliant display devices, a wall, or other building structure. Anchors and screws are supplied for installation on walls with 3/8 in. (9.5 mm) to 3/4 in. (19 mm) thickness.

CAUTION: Preinstalled screws may protrude from the back of the UC Bracket Assembly. Exercise caution when handling the UC Bracket Assembly to avoid scratching or damaging surfaces.

NOTE: The integrated cable tie wraps are reusable. Avoid damaging the cable tie wraps.

Mount the Tabletop Conference Device

The tabletop conference device can be placed on any flat surface or secured on a table using the CCS-UCA-SMK tabletop swivel mount kit (sold separately).

Install the Cable Retention Plate

The included cable retention plate provides tie-down points for cables that connect to the Crestron® conference device.

Remove the adhesive backing from the cable retention plate and install the plate on the underside of the conference device as shown in the following diagram. Ensure the cable retention plate is firmly attached before securing cables.

CAUTION: When turning over the device, place the device on a soft surface to avoid damage.

NOTE: If a swivel mount kit (CCS-UCA-SMK) is to be used, use the cable retention bracket included with the swivel mount kit as described in the CCS-UCA-SMK DO Guide (Doc. 7882).

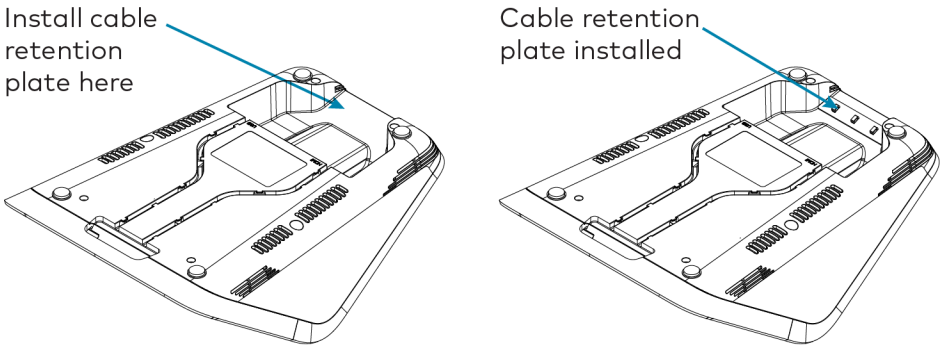

Identify the UC Bracket Assembly

The UC Bracket Assembly is available in two models. Identify the model included with your Crestron Flex system. Tap or click the corresponding image below to navigate to the appropriate connection instructions.

UC Bracket Assembly with HD-CONV-USB-200

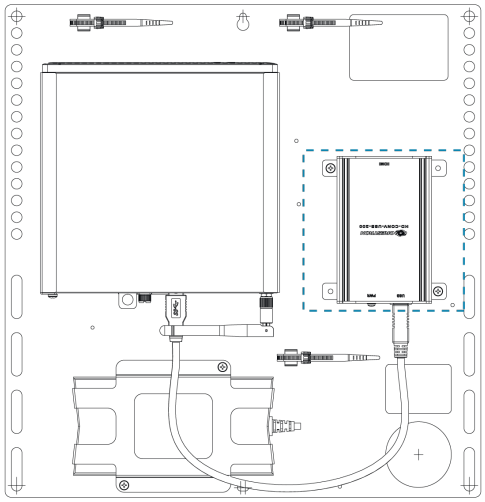

UC Bracket Assembly with HD-CONV-USB-300

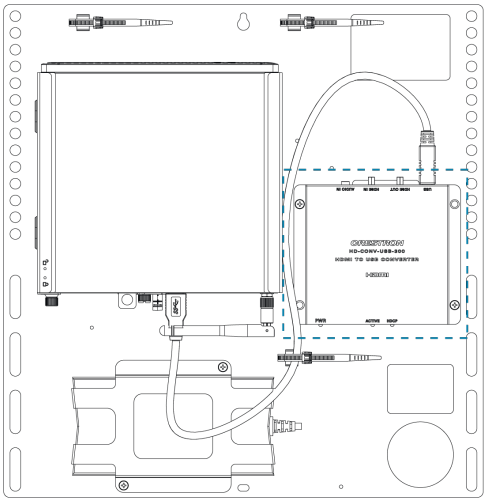

System Overview

For UC Bracket Assembly with HD-CONV-USB-200

When connections are complete, the system appears as shown below. Refer to Make Connections on page 497 for detailed connection instructions.

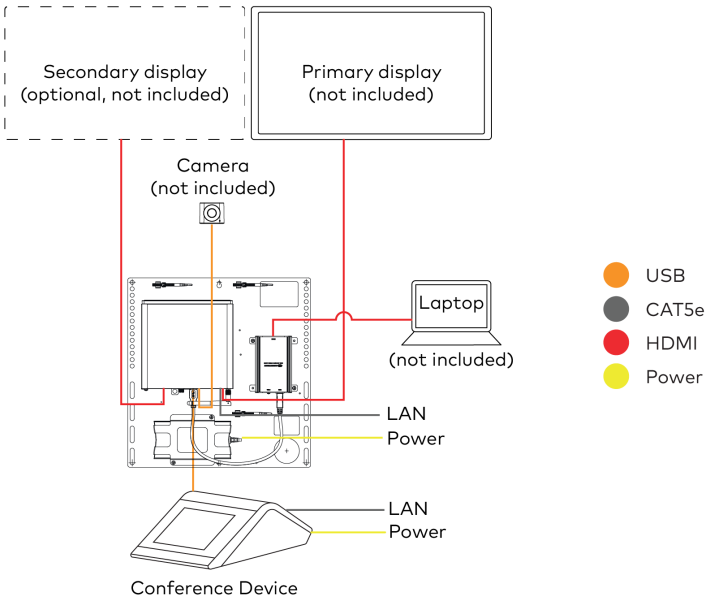

For UC Bracket Assembly with HD-CONV-USB-300

When connections are complete, the system appears as shown below. Refer to Make Connections on page 497 for detailed connection instructions.

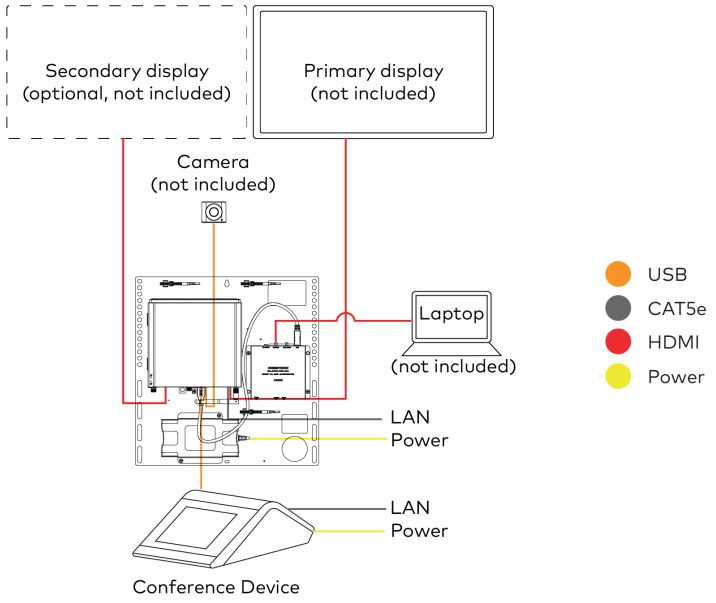

Make Connections

NOTE: For reference, the UC Bracket Assembly is shown with the HD-CONV-USB-200 in the following connection diagrams. Unless otherwise indicated in this guide, the connections remain the same for the UC Bracket Assembly with HD-CONV-USB-200 and HD-CONV-USB-300.

1. Make UC Engine connections as shown in the following illustration.

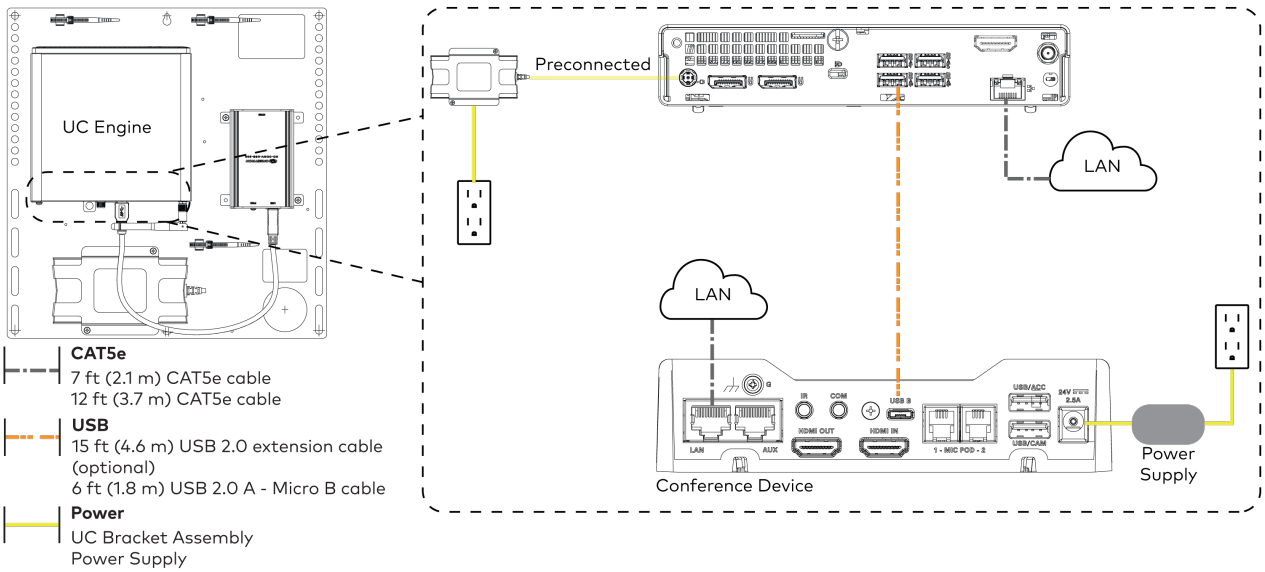

2. Connect displays to the UC Engine.

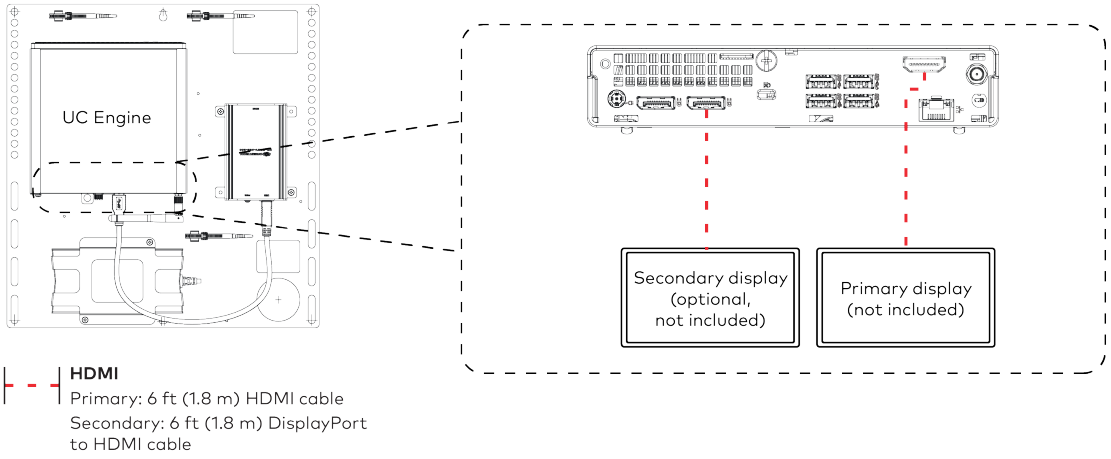

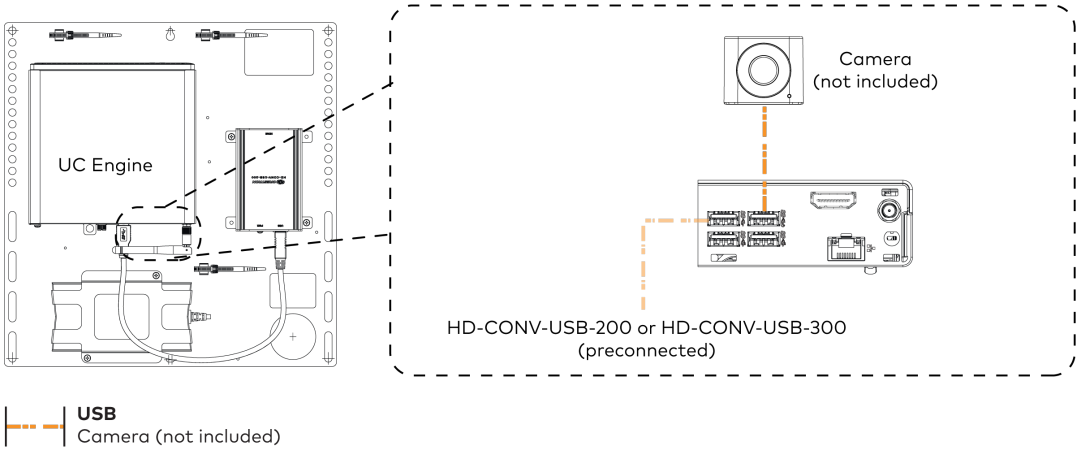

3. Connect a laptop to the HD-CONV-USB-200 or HD-CONV-USB-300.

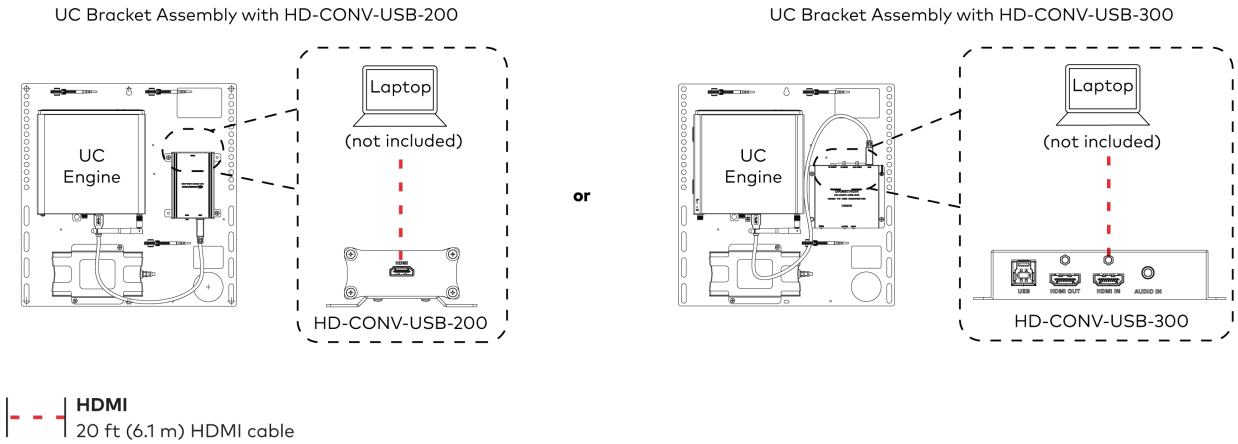

4. Bundle the cables to the bracket assembly with the integrated cable tie wraps. The cable tie wraps are reusable.

Bundle Cables

Bundle the cables together and use a provided tie wrap to secure the bundle to one of the positions on the cable retention plate at the rear of the device. Avoid bundling power and data cables together.

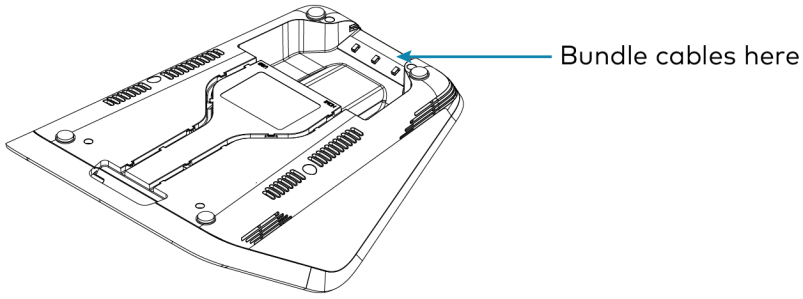

Apply Power

Press the power button on the bottom of the UC Engine and apply power to all of the other devices in the system.

Configure the Conference Device

1. On a computer, enter the IP address displayed on the conference device into a web browser.

   NOTES:
   - The device and computer must be on the same network switch and VLAN.
   - A login with administrative rights for the device is required.

2. Enter the following information in the appropriate fields:
   - **UC-Engine Address:** Enter the IP address or hostname of the UC Engine.

     NOTE: The hostname is printed on a label affixed to the UC Engine.

   - **UC-Engine Port**: By default, port number 49500 is used. If a different port number has been configured on the UC Engine, enter that port number instead.
   - **UC-Engine Admin Username**: Enter the username for the UC Engine. The default username is "admin".
   - **UC-Engine Admin Password**: Enter the login password for the UC Engine. The default password is "crestron".
3. Select **Save Changes.**

4. On the UC Engine, connect a USB keyboard and mouse (not included) to sign in to the Zoom Rooms service with an activation code or sign-in credentials (email and password).

   > **NOTE:** The Zoom Rooms Video mode allows sign-in only through the UC Engine. Therefore, to view the following instructions, use the conference room display connected to the UC Engine.

   - **Activation Code:**
     a. Select **Enter Activation Code**.
     b. Enter the 16-digit activation code provided by the IT administrator managing the Zoom portal to activate the Zoom Room assigned to the activation code. The Zoom Rooms Conference Room screen is shown on the display.
   - **Sign In:**
     a. Select **Sign In**.
     b. Enter the Zoom Room credentials and tap **Sign In**.
     c. Select the conference room name from the list and tap **Next**. The Zoom Rooms Conference Room screen is shown on the display.
5. Visit the Zoom portal, navigate to **Room Management** > **Zoom Rooms** > **(Room Name)** > **Room Settings** > **Rooms Profile** > **Devices**.
6. Enable the **Use Windows-attached Zoom Rooms Controller with specific Windows Monitor Hardware IDs** setting. Then, copy and paste the following string into the text field: Crestron:TCT009A,Crestron:FUN0216,Crestron:FUN0270

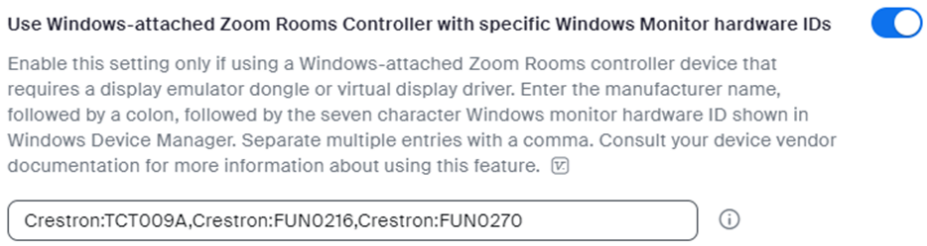

7. On the conference device, tap **Settings**. If a password is required, enter the password (the default password is "1234"). The **Settings** screen is displayed.
8. Tap **Microphone** and select the conference device as the source.
9. Tap **Speaker** and select the conference device as the source.
10. Tap **Home** to exit.

Configure the System

Refer to the Configuration on page 553 section to configure system features.

For detailed information on using Zoom Rooms, refer to the Zoom Rooms Help Center.

UC-MX50-NC-Z

Minimum Requirements

Ensure that the below requirements are met prior to setting up the system.

- A certified USB Camera (not included).
- A video display (not included) connected to the UC Engine. A second display is optional.
- A Zoom Rooms account or activation code (not included).

In The Box

Qty.	Description
	UC Bracket Assembly
1	UC Bracket Assembly with UC Engine and HDMI or AV over CAT5 content ingest (UC-BRKT-260-P-Z-ASSY, 6512692)
1	Power pack (2045870)
2	Anchor, Drywall, Plastic, 3/8 in. x 1/2 in. (9.5 mm x 12.7 mm) (2052565)
1	Key, Anchor (4529654)
2	Screw, 8-AB x 1-1/2 in. (38.1 mm), Pan Head, Combo (2052567)
4	Tie Wrap (2047935)
	Mercury X Tabletop Conference Device
1	Tabletop Conference Device, Microsoft Teams video (6510610)
1	Cable, CAT5e, RJ-45 - RJ-45, 12 ft (3.7 m) (2033988)
1	Cable Retention Plate (2047908)
1	Power supply (2045873) with cord (2042043)
3	Tie Wrap (2047935)
	Additional Items
2	Cable, CAT6a, RJ-45 - RJ-45, 20 ft (6.1 m) (6507640)
1	Cable, CAT5e, RJ-45 - RJ-45, 7 ft (2.1 m) (6509924)
1	Cable, HDMI 2.1, 6 ft (1.8 m) (6512150)
1	Cable, DisplayPort™ to HDMI, 6 ft (1.8 m) (6508282)
1	Cable, USB 2.0, A - Micro-B, 6 ft (1.8 m) (6510947)
1	Cable, thin HDMI, 6 ft (1.8 m) (6510946)

Mount Devices

Mount the UC Bracket Assembly

Mount the UC Bracket Assembly to VESA® compliant display devices, a wall, or other building structure. Anchors and screws are supplied for installation on walls with 3/8 in. (9.5 mm) to 3/4 in. (19 mm) thickness.

CAUTION: Preinstalled screws may protrude from the back of the UC Bracket Assembly. Exercise caution when handling the UC Bracket Assembly to avoid scratching or damaging surfaces.

NOTE: The integrated cable tie wraps are reusable. Avoid damaging the cable tie wraps.

Mount the Tabletop Conference Device

The tabletop conference device can be placed on any flat surface or secured on a table using the CCS-UCA-SMK tabletop swivel mount kit (sold separately).

System Overview

When connections are complete, the system appears as shown below. Refer to Make Connections on page 503 for detailed connection instructions.

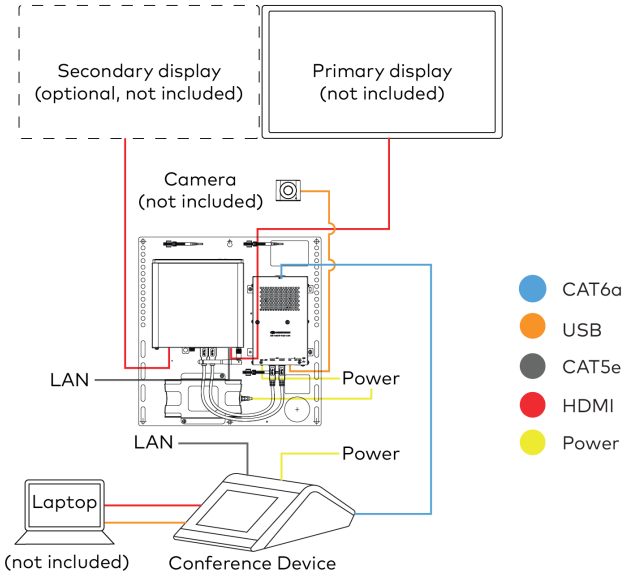

Make Connections

1. Make UC Engine connections as shown in the following illustration.

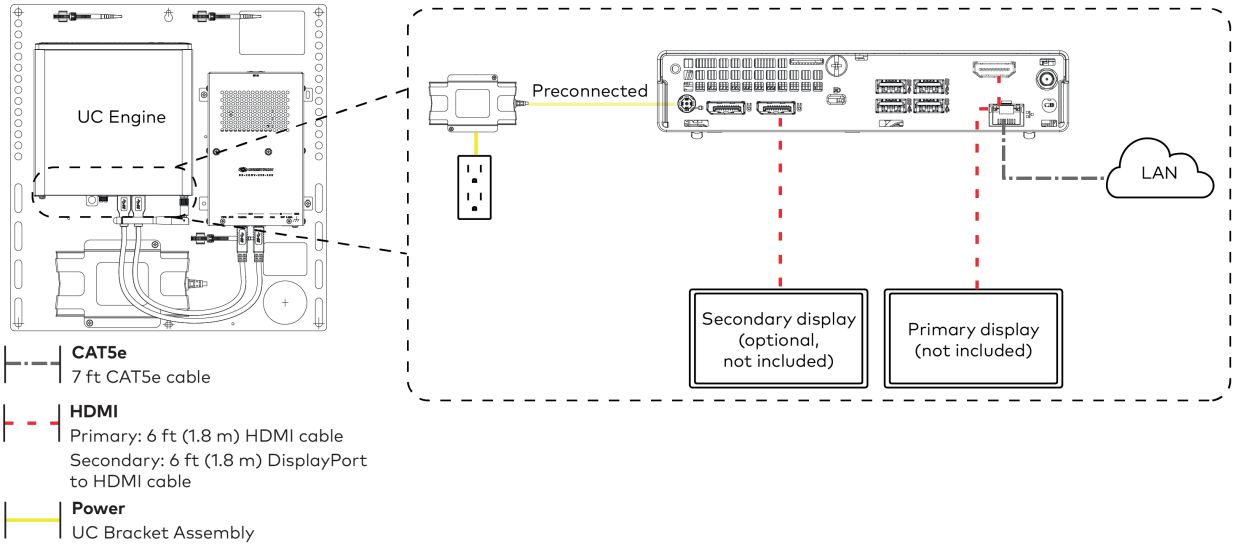

CAT5e
7 ft CAT5e cable

HDMI
Primary: 6 ft (1.8 m) HDMI cable
Secondary: 6 ft (1.8 m) DisplayPort to HDMI cable

Power
UC Bracket Assembly

2. Make network, content ingest, laptop, and power connections on the bottom of the conference device. Connect the conference device's power supply to an AC power outlet.

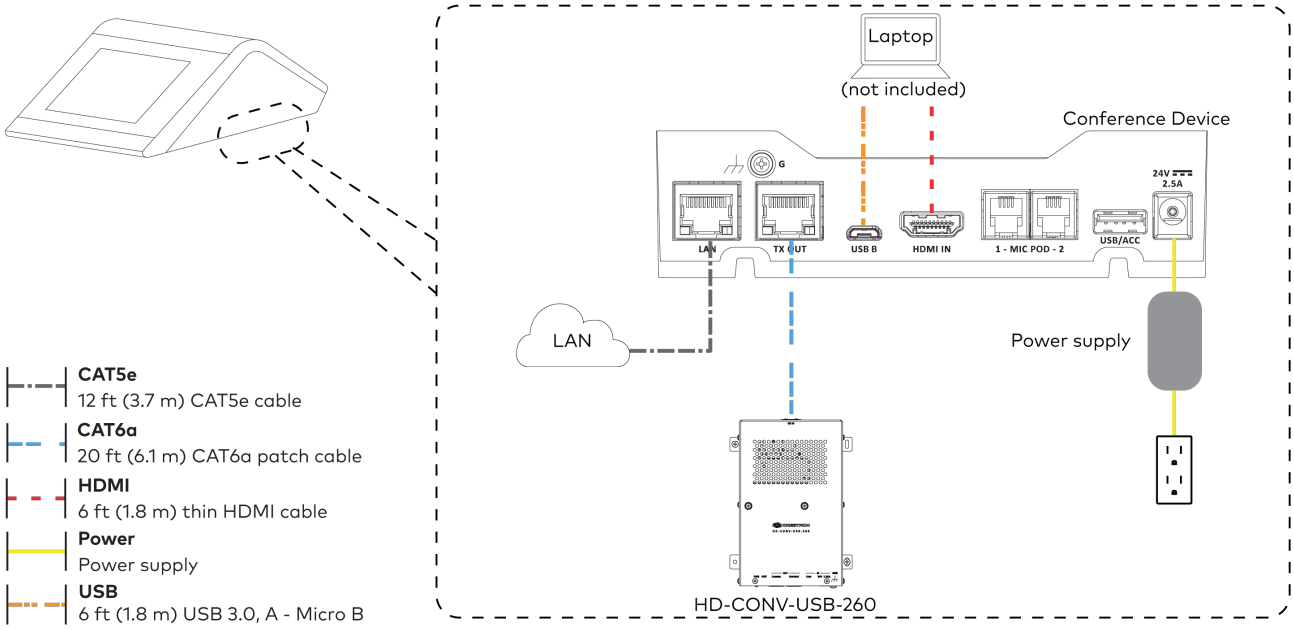

3. Connect the power supply and camera (not included) to the bottom of the content ingest device (HD-CONV-USB-260). Connect the power supply to an AC power outlet.

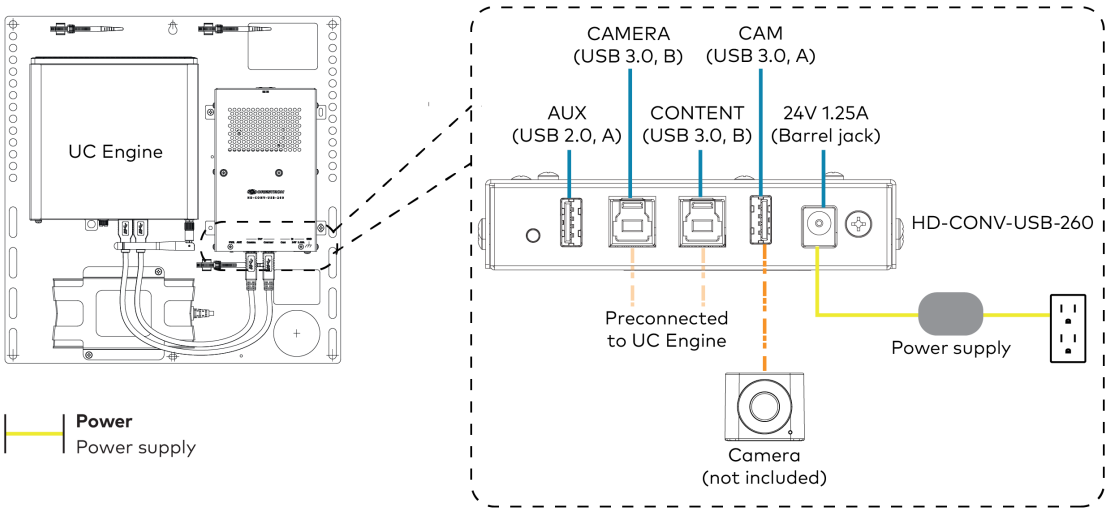

4. Bundle the cables to the bracket assembly with the integrated cable tie wraps. The cable tie wraps are reusable.

Apply Power

Press the power button on the bottom of the UC Engine and apply power to all of the other devices in the system.

Configure the Conference Device

1. On a computer, enter the IP address displayed on the conference device into a web browser.

   NOTES:
   - The device and computer must be on the same network switch and VLAN.
   - A login with administrative rights for the device is required.

2. Enter the following information in the appropriate fields:
   - **UC-Engine Address:** Enter the IP address or hostname of the UC Engine.

     NOTE: The hostname is printed on a label affixed to the UC Engine.

   - **UC-Engine Port**: By default, port number 49500 is used. If a different port number has been configured on the UC Engine, enter that port number instead.
   - **UC-Engine Admin Username**: Enter the username for the UC Engine. The default username is "admin".
   - **UC-Engine Admin Password**: Enter the login password for the UC Engine. The default password is "crestron".
3. Select **Save Changes.**

4. On the UC Engine, connect a USB keyboard and mouse (not included) to sign in to the Zoom Rooms service with an activation code or sign-in credentials (email and password).

   > **NOTE:** The Zoom Rooms Video mode allows sign-in only through the UC Engine. Therefore, to view the following instructions, use the conference room display connected to the UC Engine.

   - **Activation Code:**
     a. Select **Enter Activation Code**.
     b. Enter the 16-digit activation code provided by the IT administrator managing the Zoom portal to activate the Zoom Room assigned to the activation code. The Zoom Rooms Conference Room screen is shown on the display.
   - **Sign In:**
     a. Select **Sign In**.
     b. Enter the Zoom Room credentials and tap **Sign In**.
     c. Select the conference room name from the list and tap **Next**. The Zoom Rooms Conference Room screen is shown on the display.
5. Visit the Zoom portal, navigate to **Room Management** > **Zoom Rooms** > **(Room Name)** > **Room Settings** > **Rooms Profile** > **Devices**.
6. Enable the **Use Windows-attached Zoom Rooms Controller with specific Windows Monitor Hardware IDs** setting. Then, copy and paste the following string into the text field: Crestron:TCT009A,Crestron:FUN0216,Crestron:FUN0270

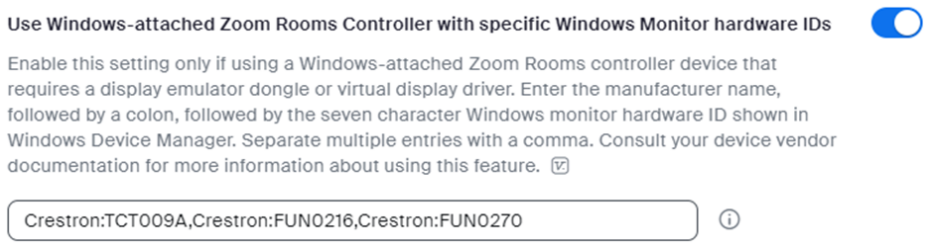

7. On the conference device, tap **Settings**. If a password is required, enter the password (the default password is "1234"). The **Settings** screen is displayed.
8. Tap **Microphone** and select the conference device as the source.
9. Tap **Speaker** and select the conference device as the source.
10. Tap **Home** to exit.

Configure the System

Refer to the Configuration on page 553 section to configure system features.

For detailed information on using Zoom Rooms, refer to the Zoom Rooms Help Center.

UC-M70-Z

Minimum Requirements

Ensure that the below requirements are met prior to setting up the system.

- A video display (not included) connected to the UC Engine. A second display is optional.
- A Zoom Rooms account or activation code (not included).

In The Box

Qty.	Description
	UC Bracket Assembly
1	UC Bracket Assembly with UC Engine and HDMI content ingest (UC-BRKT-200-S-Z-ASSY, 6512690)
2	Anchor, Drywall, Plastic, 3/8 in. x 1/2 in. (9.5 mm x 12.7 mm) (2052565)
1	Key, Anchor (4529654)
2	Screw, 8-AB x 1-1/2 in. (38.1 mm), Pan Head, Combo (2052567)
4	Tie Wrap (2047935)
	Mercury Tabletop Conference Device
1	Tabletop Conference Device, Microsoft Teams video (6508227)
1	Cable, CAT5e, RJ-45 - RJ-45, 12 ft (3.7 m) (2033988)
1	Cable Retention Plate (2047908)
3	Tie Wrap (2047935)
	CCS-CAM-L1 AI Collaboration Camera
1	AI collaboration camera (6512296)
	Microphone Pod
1	Extension Microphone Pod (6508084)
	Additional Items
1	Cable, CAT5e, RJ-45 - RJ-45, 7 ft (2.1 m) (6509924)
1	Cable, HDMI 2.1, 6 ft (1.8 m) (6512150)
1	Cable, HDMI, 20 ft (6.1 m) (6503567)
1	Cable, DisplayPort™ to HDMI, 6 ft (1.8 m) (6508282)
1	Cable, USB Extension, USB Type A Male-to-Female, 15 ft (4.6 m) (6508260)
1	Cable, USB 2.0, A - Micro-B, 6 ft (1.8 m) (6510947)
1	Power supply (6500187)

Mount Devices

Mount the UC Bracket Assembly

Mount the UC Bracket Assembly to VESA® compliant display devices, a wall, or other building structure. Anchors and screws are supplied for installation on walls with 3/8 in. (9.5 mm) to 3/4 in. (19 mm) thickness.

CAUTION: Preinstalled screws may protrude from the back of the UC Bracket Assembly. Exercise caution when handling the UC Bracket Assembly to avoid scratching or damaging surfaces.

NOTE: The integrated cable tie wraps are reusable. Avoid damaging the cable tie wraps.

Mount the Camera

Mount the included camera according to its documentation.

Mount the Tabletop Conference Device

The tabletop conference device can be placed on any flat surface or secured on a table using the CCS-UCA-SMK tabletop swivel mount kit (sold separately).

Install the Cable Retention Plate

The included cable retention plate provides tie-down points for cables that connect to the Crestron® conference device.

Remove the adhesive backing from the cable retention plate and install the plate on the underside of the conference device as shown in the following diagram. Ensure the cable retention plate is firmly attached before securing cables.

CAUTION: When turning over the device, place the device on a soft surface to avoid damage.

NOTE: If a swivel mount kit (CCS-UCA-SMK) is to be used, use the cable retention bracket included with the swivel mount kit as described in the CCS-UCA-SMK DO Guide (Doc. 7882).

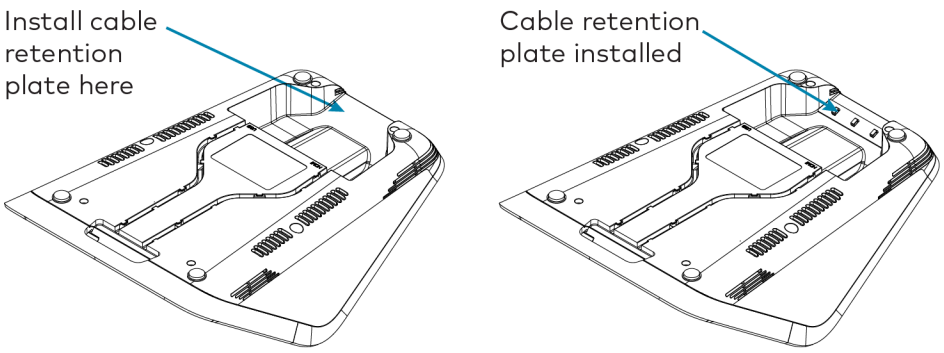

Identify the UC Bracket Assembly

The UC Bracket Assembly is available in two models. Identify the model included with your Crestron Flex system. Tap or click the corresponding image below to navigate to the appropriate connection instructions.

UC Bracket Assembly with HD-CONV-USB-200

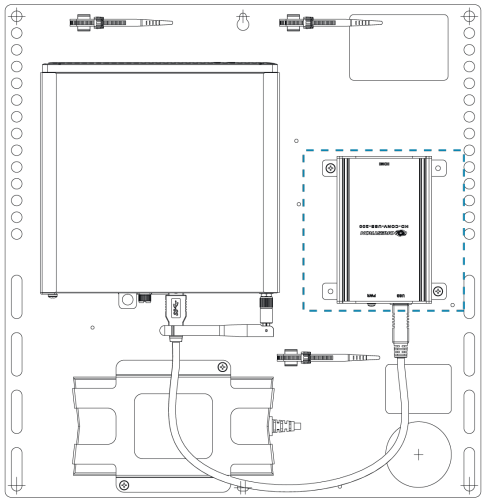

UC Bracket Assembly with HD-CONV-USB-300

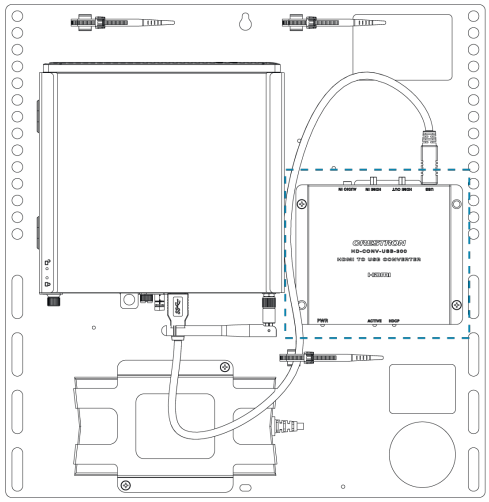

System Overview

For UC Bracket Assembly with HD-CONV-USB-200

When connections are complete, the system appears as shown below. Refer to Make Connections on page 510 for detailed connection instructions.

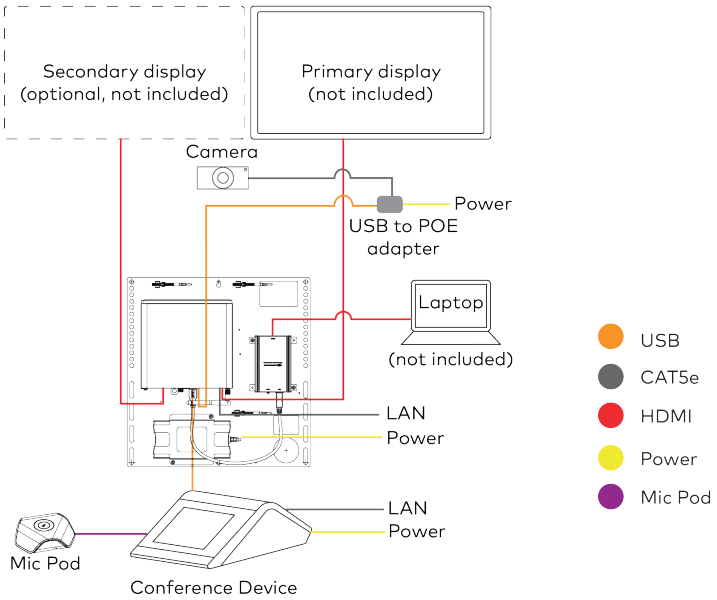

For UC Bracket Assembly with HD-CONV-USB-300

When connections are complete, the system appears as shown below. Refer to Make Connections on page 510 for detailed connection instructions.

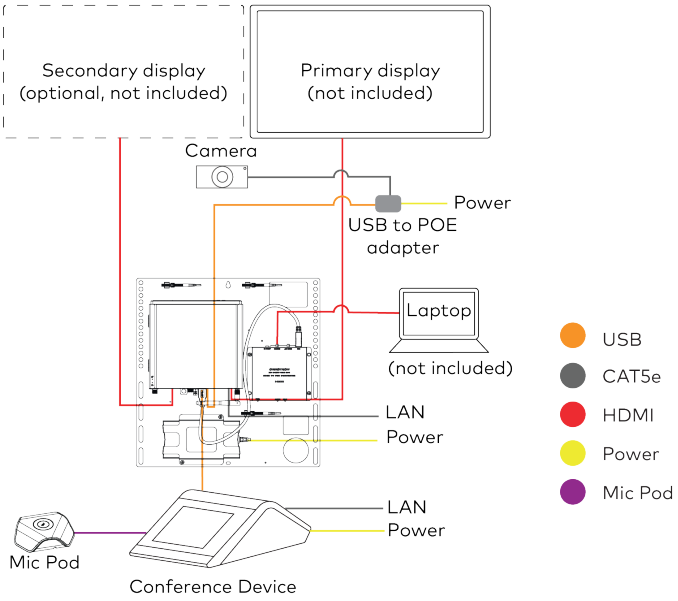

Make Connections

NOTE: For reference, the UC Bracket Assembly is shown with the HD-CONV-USB-200 in the following connection diagrams. Unless otherwise indicated in this guide, the connections remain the same for the UC Bracket Assembly with HD-CONV-USB-200 and HD-CONV-USB-300.

1. Make UC Engine connections as shown in the following illustration.

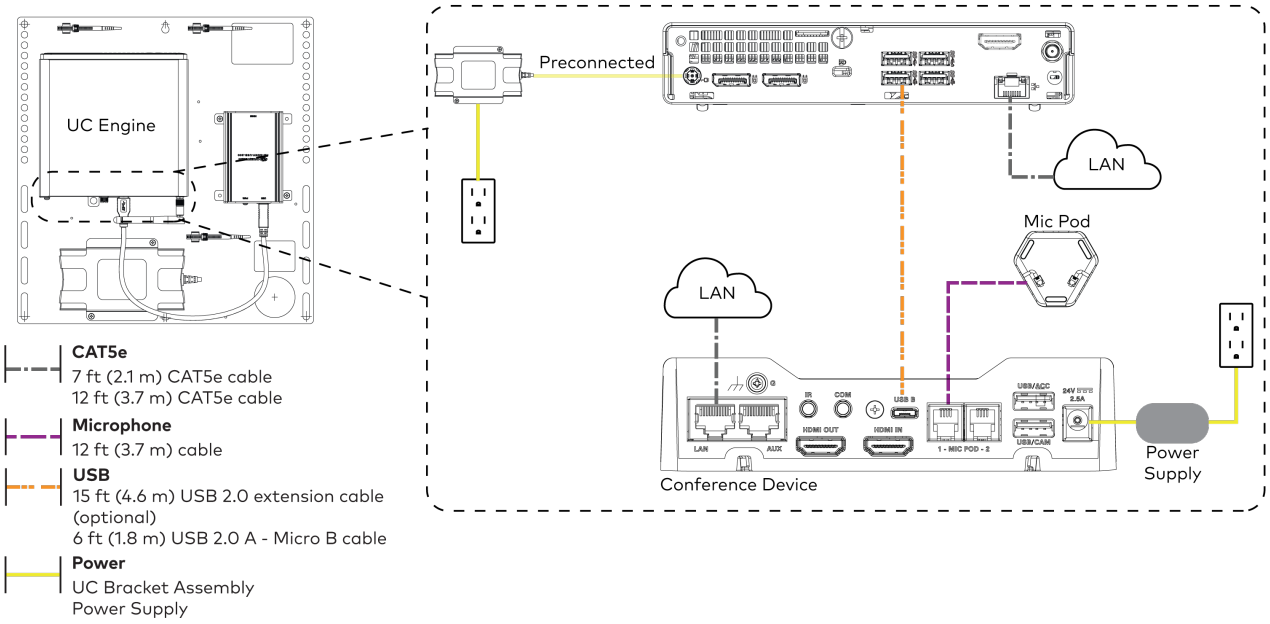

2. Connect displays to the UC Engine.

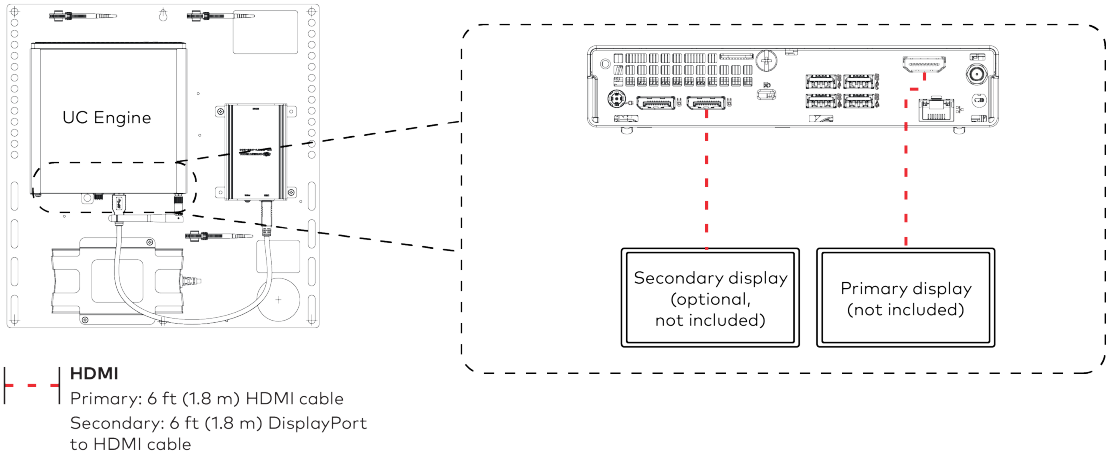

3. Connect the camera to the UC Engine as shown in the image below. Do not connect the camera to any of the other USB ports.

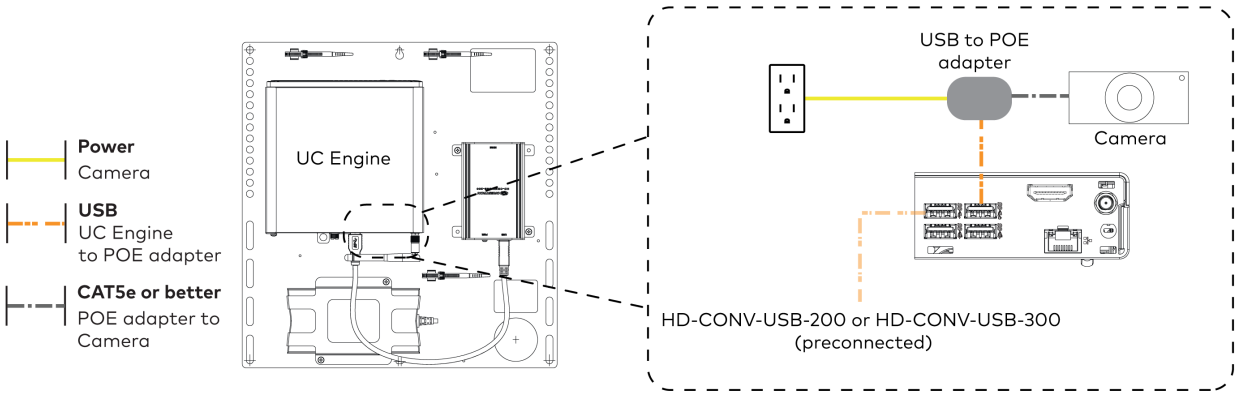

4. Connect a laptop to the HD-CONV-USB-200 or HD-CONV-USB-300.

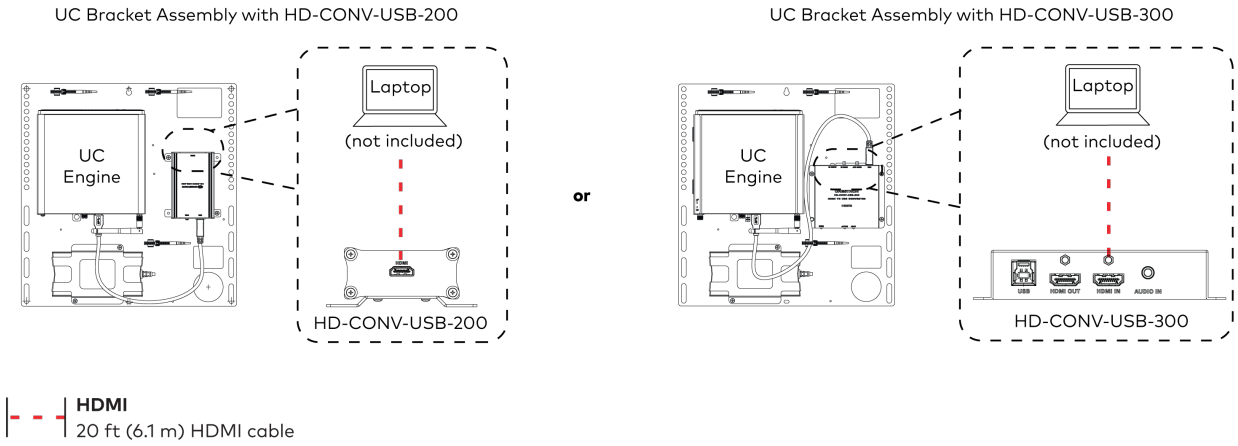

5. Bundle the cables to the bracket assembly with the integrated cable tie wraps. The cable tie wraps are reusable.

Bundle Cables

Bundle the cables together and use a provided tie wrap to secure the bundle to one of the positions on the cable retention plate at the rear of the device. Avoid bundling power and data cables together.

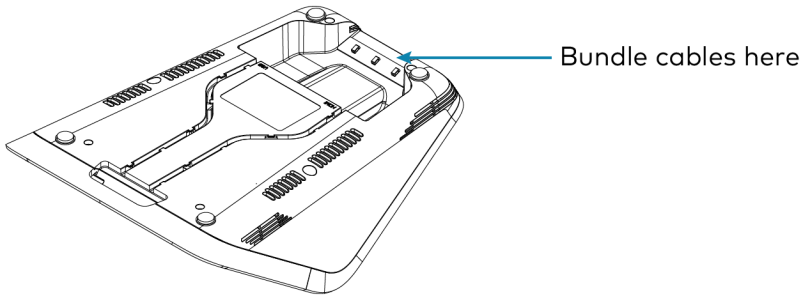

Apply Power

Press the power button on the bottom of the UC Engine and apply power to all of the other devices in the system.

Configure the Conference Device

1. On a computer, enter the IP address displayed on the conference device into a web browser.

> **NOTES:**
>
> - The device and computer must be on the same network switch and VLAN.
> - A login with administrative rights for the device is required.

2. Enter the following information in the appropriate fields:
   - **UC-Engine Address:** Enter the IP address or hostname of the UC Engine.

     NOTE: The hostname is printed on a label affixed to the UC Engine.

   - **UC-Engine Port**: By default, port number 49500 is used. If a different port number has been configured on the UC Engine, enter that port number instead.
   - **UC-Engine Admin Username**: Enter the username for the UC Engine. The default username is "admin".
   - **UC-Engine Admin Password**: Enter the login password for the UC Engine. The default password is "crestron".
3. Select **Save Changes.**
4. On the UC Engine, connect a USB keyboard and mouse (not included) to sign in to the Zoom Rooms service with an activation code or sign-in credentials (email and password).

   NOTE: The Zoom Rooms Video mode allows sign-in only through the UC Engine. Therefore, to view the following instructions, use the conference room display connected to the UC Engine.

   - **Activation Code:**
     a. Select **Enter Activation Code**.
     b. Enter the 16-digit activation code provided by the IT administrator managing the Zoom portal to activate the Zoom Room assigned to the activation code. The Zoom Rooms Conference Room screen is shown on the display.
   - **Sign In:**
     a. Select **Sign In**.
     b. Enter the Zoom Room credentials and tap **Sign In**.
     c. Select the conference room name from the list and tap **Next**. The Zoom Rooms Conference Room screen is shown on the display.
5. Visit the Zoom portal, navigate to **Room Management** > **Zoom Rooms** > **(Room Name)** > **Room Settings** > **Rooms Profile** > **Devices**.
6. Enable the **Use Windows-attached Zoom Rooms Controller with specific Windows Monitor Hardware IDs** setting. Then, copy and paste the following string into the text field: Crestron:TCT009A,Crestron:FUN0216,Crestron:FUN0270

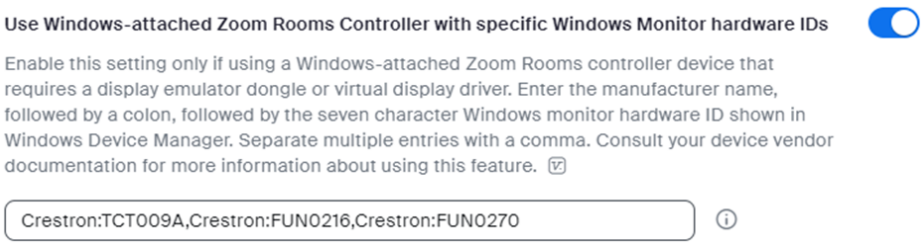

7. On the conference device, tap **Settings**. If a password is required, enter the password (the default password is "1234"). The **Settings** screen is displayed.
8. Tap **Microphone** and select the conference device as the source.

9. Tap **Speaker** and select the conference device as the source.
10. Tap **Home** to exit.

Configure the System

Refer to the Configuration on page 553 section to configure system features.

For detailed information on using Zoom Rooms, refer to the Zoom Rooms Help Center.

UC-MX70-Z

Minimum Requirements

Ensure that the below requirements are met prior to setting up the system.

- A video display (not included) connected to the UC Engine. A second display is optional.
- A Zoom Rooms account or activation code (not included).

In The Box

Qty.	Description
	UC Bracket Assembly
1	UC Bracket Assembly with UC Engine and HDMI or AV over CAT5 content ingest (UC-BRKT-260-P-Z-ASSY, 6512692)
1	Power pack (2045870)
2	Anchor, Drywall, Plastic, 3/8 in. x 1/2 in. (9.5 mm x 12.7 mm) (2052565)
1	Key, Anchor (4529654)
2	Screw, 8-AB x 1-1/2 in. (38.1 mm), Pan Head, Combo (2052567)
4	Tie Wrap (2047935)
	Mercury X Tabletop Conference Device
1	Tabletop Conference Device, Microsoft Teams video (6510610)
1	Cable, CAT5e, RJ-45 - RJ-45, 12 ft (3.7 m) (2033988)
1	Cable Retention Plate (2047908)
1	Power supply (2045873) with cord (2042043)
3	Tie Wrap (2047935)
	CCS-CAM-L1 AI Collaboration Camera
1	AI collaboration camera (6512296)
	Microphone Pod
1	Extension Microphone Pod (6508084)
	Additional Items
2	Cable, CAT6a, RJ-45 - RJ-45, 20 ft (6.1 m) (6507640)
1	Cable, CAT5e, RJ-45 - RJ-45, 7 ft (2.1 m) (6509924)
1	Cable, HDMI 2.1, 6 ft (1.8 m) (6512150)
1	Cable, DisplayPort™ to HDMI, 6 ft (1.8 m) (6508282)
1	Cable, USB 2.0, A - Micro-B, 6 ft (1.8 m) (6510947)
1	Cable, thin HDMI, 6 ft (1.8 m) (6510946)

Mount Devices

Mount the UC Bracket Assembly

Mount the UC Bracket Assembly to VESA® compliant display devices, a wall, or other building structure. Anchors and screws are supplied for installation on walls with 3/8 in. (9.5 mm) to 3/4 in. (19 mm) thickness.

CAUTION: Preinstalled screws may protrude from the back of the UC Bracket Assembly. Exercise caution when handling the UC Bracket Assembly to avoid scratching or damaging surfaces.

NOTE: The integrated cable tie wraps are reusable. Avoid damaging the cable tie wraps.

Mount the Camera

Mount the included camera according to its documentation.

Mount the Tabletop Conference Device

The tabletop conference device can be placed on any flat surface or secured on a table using the CCS-UCA-SMK tabletop swivel mount kit (sold separately).

System Overview

When connections are complete, the system appears as shown below. Refer to Make Connections on page 518 for detailed connection instructions.

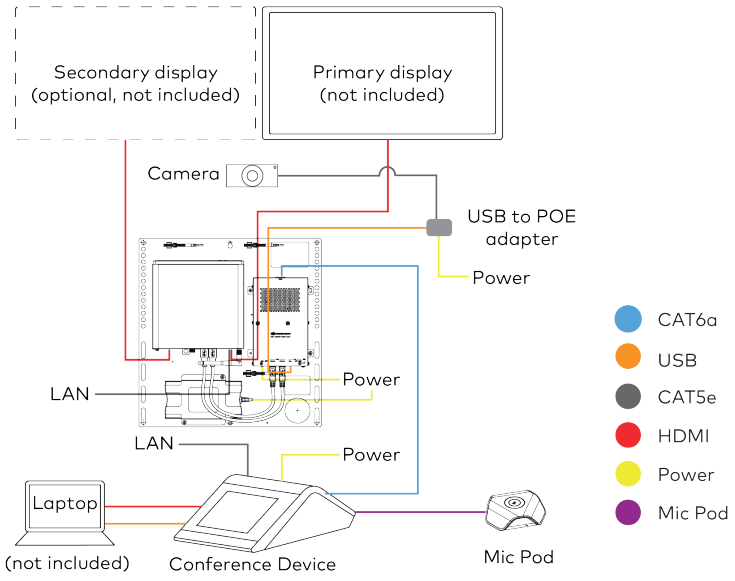

Make Connections

1. Make UC Engine connections as shown in the following illustration.

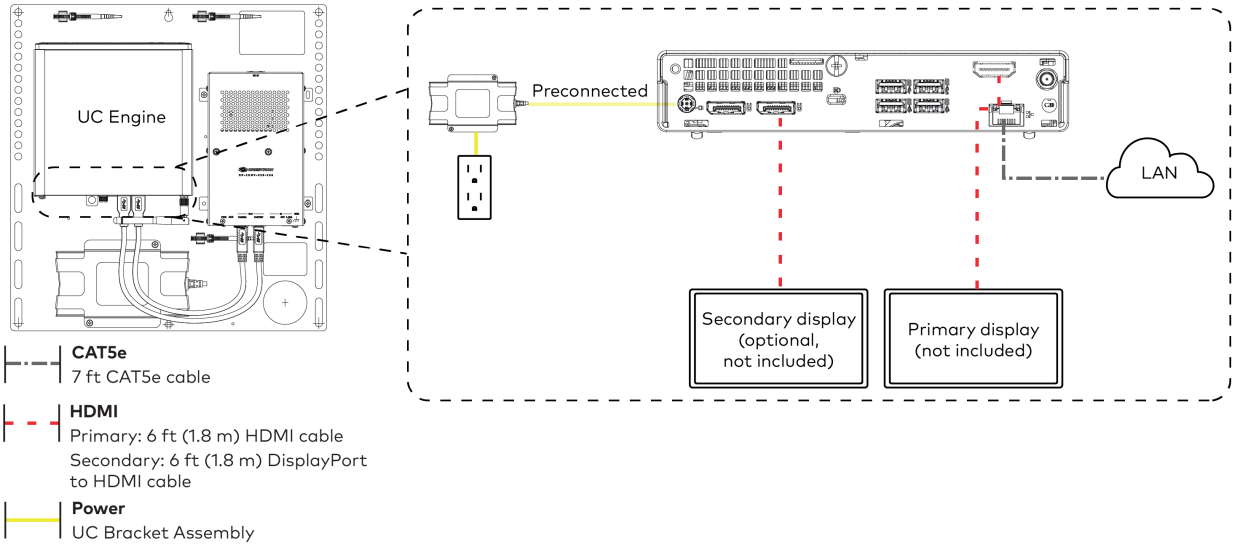

2. Make network, content ingest, laptop, and power connections on the bottom of the conference device. Connect the conference device's power supply to an AC power outlet.

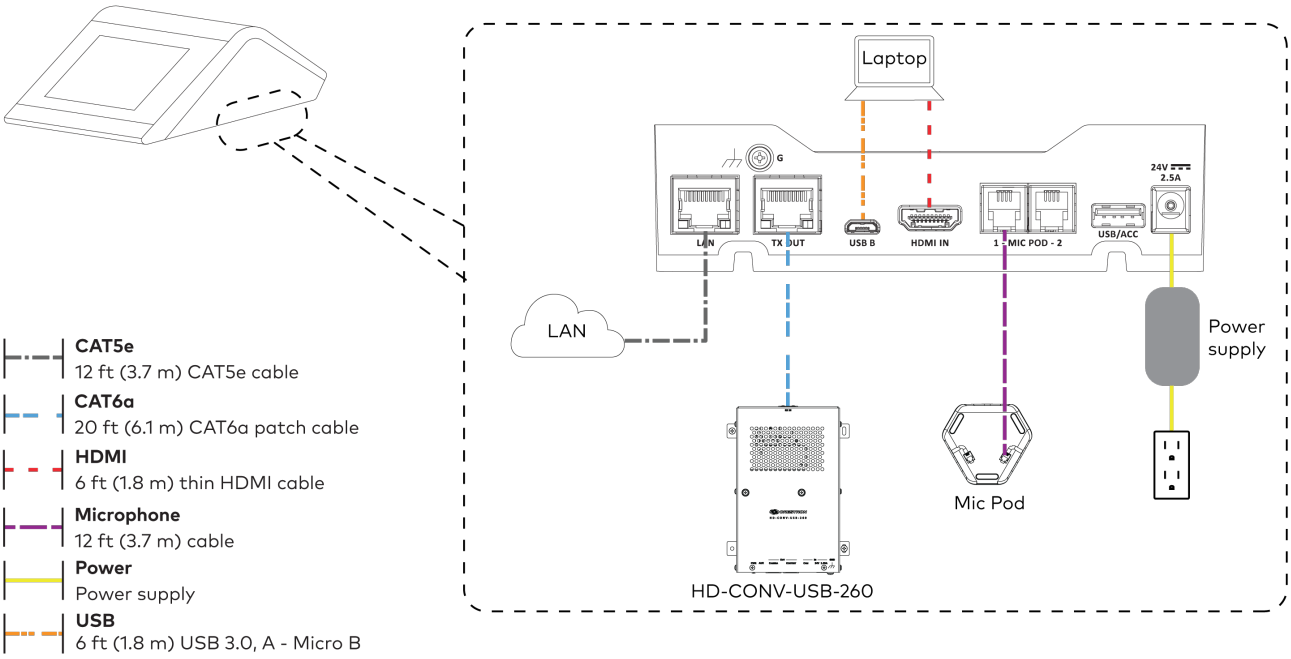

3. Connect the power supply and camera to the bottom of the content ingest device (HD-CONV-USB-260). Connect the power supplies to an AC power outlet.

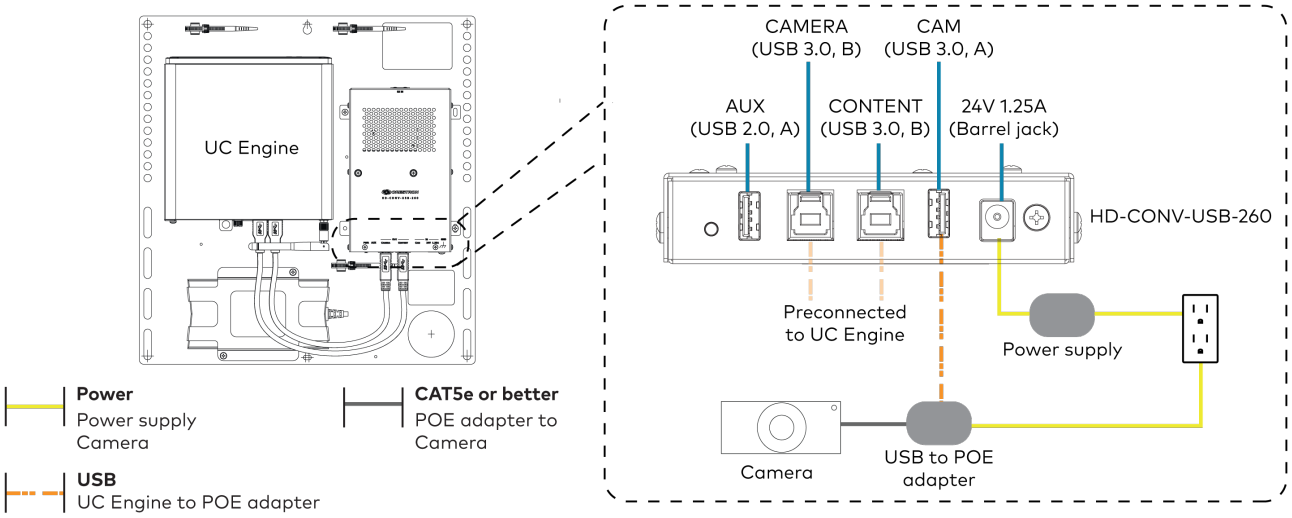

4. Bundle the cables to the bracket assembly with the integrated cable tie wraps. The cable tie wraps are reusable.

Apply Power

Press the power button on the bottom of the UC Engine and apply power to all of the other devices in the system.

Configure the Conference Device

1. On a computer, enter the IP address displayed on the conference device into a web browser.

   NOTES:
   - The device and computer must be on the same network switch and VLAN.
   - A login with administrative rights for the device is required.

2. Enter the following information in the appropriate fields:
   - **UC-Engine Address:** Enter the IP address or hostname of the UC Engine.

     NOTE: The hostname is printed on a label affixed to the UC Engine.

   - **UC-Engine Port**: By default, port number 49500 is used. If a different port number has been configured on the UC Engine, enter that port number instead.
   - **UC-Engine Admin Username**: Enter the username for the UC Engine. The default username is "admin".
   - **UC-Engine Admin Password**: Enter the login password for the UC Engine. The default password is "crestron".
3. Select **Save Changes.**

4. On the UC Engine, connect a USB keyboard and mouse (not included) to sign in to the Zoom Rooms service with an activation code or sign-in credentials (email and password).

   NOTE: The Zoom Rooms Video mode allows sign-in only through the UC Engine. Therefore, to view the following instructions, use the conference room display connected to the UC Engine.

   - **Activation Code:**
     a. Select **Enter Activation Code**.
     b. Enter the 16-digit activation code provided by the IT administrator managing the Zoom portal to activate the Zoom Room assigned to the activation code. The Zoom Rooms Conference Room screen is shown on the display.
   - **Sign In:**
     a. Select **Sign In**.
     b. Enter the Zoom Room credentials and tap **Sign In**.
     c. Select the conference room name from the list and tap **Next**. The Zoom Rooms Conference Room screen is shown on the display.
5. Visit the Zoom portal, navigate to **Room Management** > **Zoom Rooms** > **(Room Name)** > **Room Settings** > **Rooms Profile** > **Devices**.
6. Enable the **Use Windows-attached Zoom Rooms Controller with specific Windows Monitor Hardware IDs** setting. Then, copy and paste the following string into the text field: Crestron:TCT009A,Crestron:FUN0216,Crestron:FUN0270

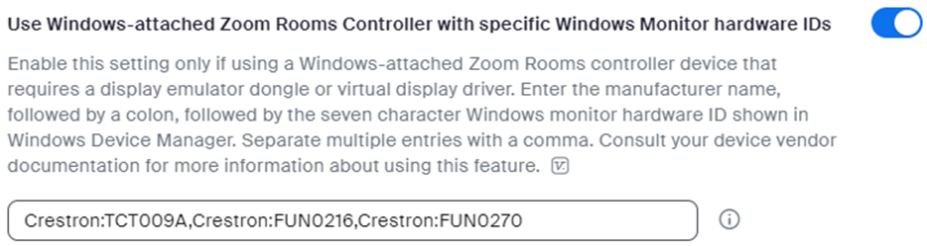

7. On the conference device, tap **Settings**. If a password is required, enter the password (the default password is "1234"). The **Settings** screen is displayed.
8. Tap **Microphone** and select the conference device as the source.
9. Tap **Speaker** and select the conference device as the source.
10. Tap **Home** to exit.

Configure the System

Refer to the Configuration on page 553 section to configure system features.

For detailed information on using Zoom Rooms, refer to the Zoom Rooms Help Center.

UC-M70-NC-Z

Minimum Requirements

Ensure that the below requirements are met prior to setting up the system.

- A certified USB Camera (not included).
- A video display (not included) connected to the UC Engine. A second display is optional.
- A Zoom Rooms account or activation code (not included).

In The Box

Qty.	Description
	UC Bracket Assembly
1	UC Bracket Assembly with UC Engine and HDMI content ingest (UC-BRKT-200-S-Z-ASSY, 6512690)
2	Anchor, Drywall, Plastic, 3/8 in. x 1/2 in. (9.5 mm x 12.7 mm) (2052565)
1	Key, Anchor (4529654)
2	Screw, 8-AB x 1-1/2 in. (38.1 mm), Pan Head, Combo (2052567)
4	Tie Wrap (2047935)
	Mercury Tabletop Conference Device
1	Tabletop Conference Device, Microsoft Teams video (6508227)
1	Cable, CAT5e, RJ-45 - RJ-45, 12 ft (3.7 m) (2033988)
1	Cable Retention Plate (2047908)
3	Tie Wrap (2047935)
	Microphone Pod
1	Extension Microphone Pod (6508084)
	Additional Items
1	Cable, CAT5e, RJ-45 - RJ-45, 7 ft (2.1 m) (6509924)
1	Cable, HDMI 2.1, 6 ft (1.8 m) (6512150)
1	Cable, HDMI, 20 ft (6.1 m) (6503567)
1	Cable, DisplayPort™ to HDMI, 6 ft (1.8 m) (6508282)
1	Cable, USB Extension, USB Type A Male-to-Female, 15 ft (4.6 m) (6508260)
1	Cable, USB 2.0, A - Micro-B, 6 ft (1.8 m) (6510947)
1	Power supply (6500187)

Mount Devices

Mount the UC Bracket Assembly

Mount the UC Bracket Assembly to VESA® compliant display devices, a wall, or other building structure. Anchors and screws are supplied for installation on walls with 3/8 in. (9.5 mm) to 3/4 in. (19 mm) thickness.

CAUTION: Preinstalled screws may protrude from the back of the UC Bracket Assembly. Exercise caution when handling the UC Bracket Assembly to avoid scratching or damaging surfaces.

NOTE: The integrated cable tie wraps are reusable. Avoid damaging the cable tie wraps.

Mount the Tabletop Conference Device

The tabletop conference device can be placed on any flat surface or secured on a table using the CCS-UCA-SMK tabletop swivel mount kit (sold separately).

Install the Cable Retention Plate

The included cable retention plate provides tie-down points for cables that connect to the Crestron® conference device.

Remove the adhesive backing from the cable retention plate and install the plate on the underside of the conference device as shown in the following diagram. Ensure the cable retention plate is firmly attached before securing cables.

CAUTION: When turning over the device, place the device on a soft surface to avoid damage.

NOTE: If a swivel mount kit (CCS-UCA-SMK) is to be used, use the cable retention bracket included with the swivel mount kit as described in the CCS-UCA-SMK DO Guide (Doc. 7882).

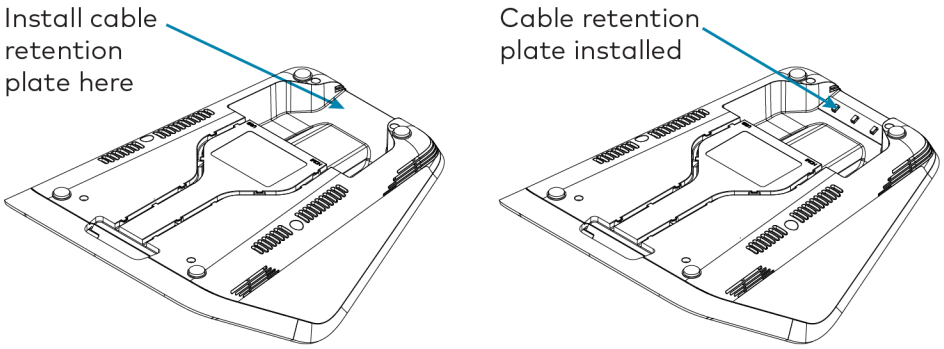

Identify the UC Bracket Assembly

The UC Bracket Assembly is available in two models. Identify the model included with your Crestron Flex system. Tap or click the corresponding image below to navigate to the appropriate connection instructions.

UC Bracket Assembly with HD-CONV-USB-200

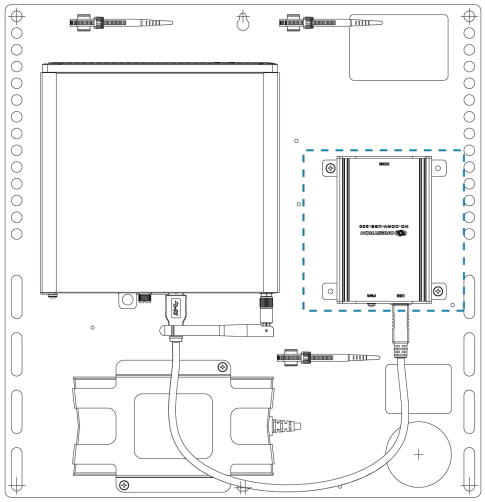

UC Bracket Assembly with HD-CONV-USB-300

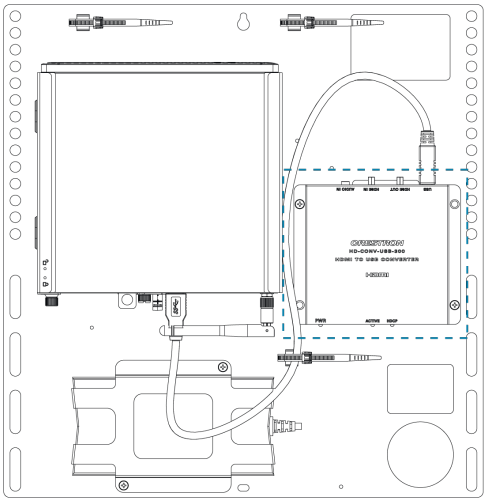

System Overview

For UC Bracket Assembly with HD-CONV-USB-200

When connections are complete, the system appears as shown below. Refer to Make Connections on page 525 for detailed connection instructions.

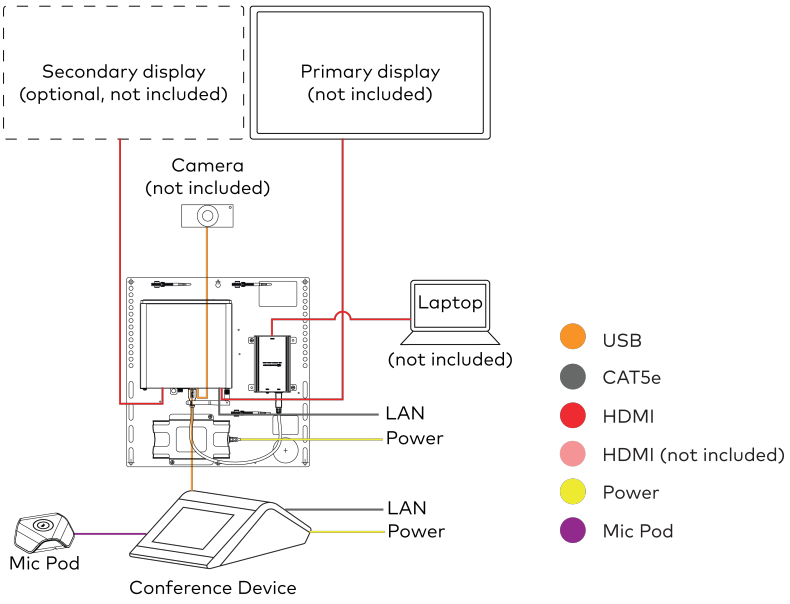

For UC Bracket Assembly with HD-CONV-USB-300

When connections are complete, the system appears as shown below. Refer to Make Connections on page 525 for detailed connection instructions.

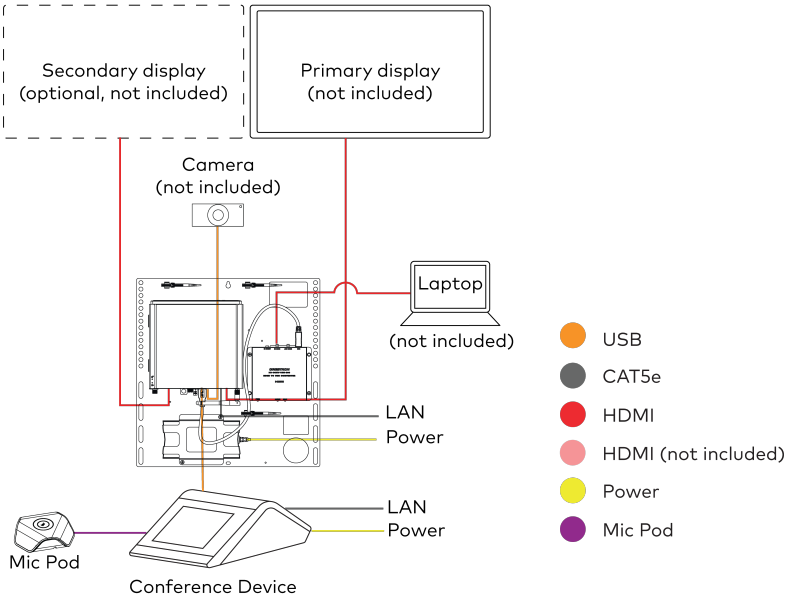

Make Connections

NOTE: For reference, the UC Bracket Assembly is shown with the HD-CONV-USB-200 in the following connection diagrams. Unless otherwise indicated in this guide, the connections remain the same for the UC Bracket Assembly with HD-CONV-USB-200 and HD-CONV-USB-300.

1. Make UC Engine connections as shown in the following illustration.

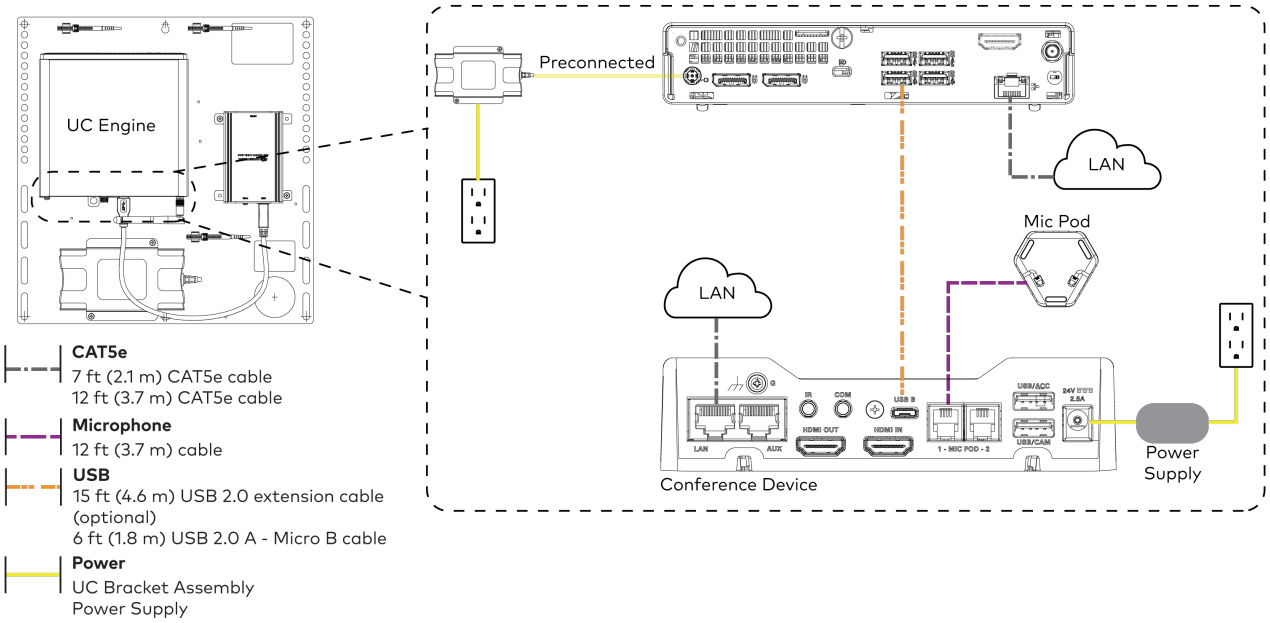

2. Connect displays to the UC Engine.

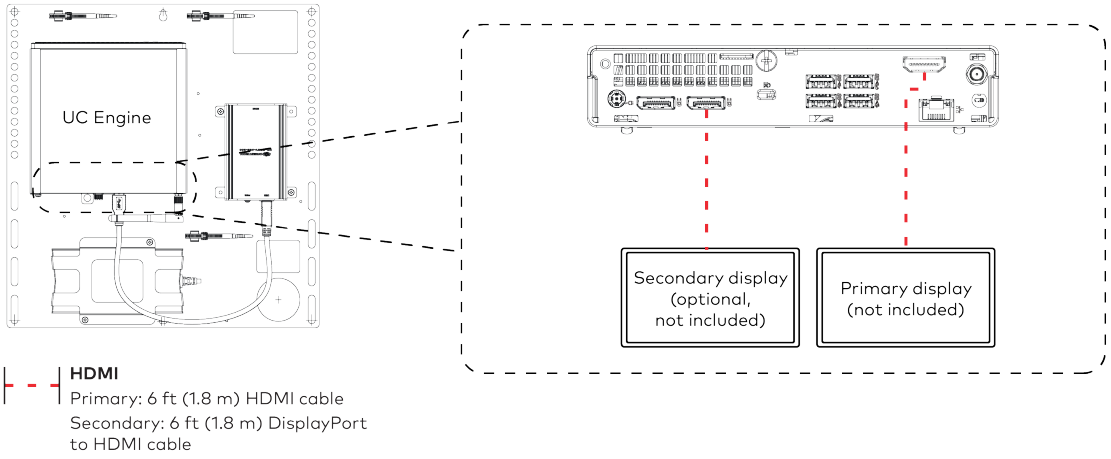

HDMI
Primary: 6 ft (1.8 m) HDMI cable
Secondary: 6 ft (1.8 m) DisplayPort to HDMI cable

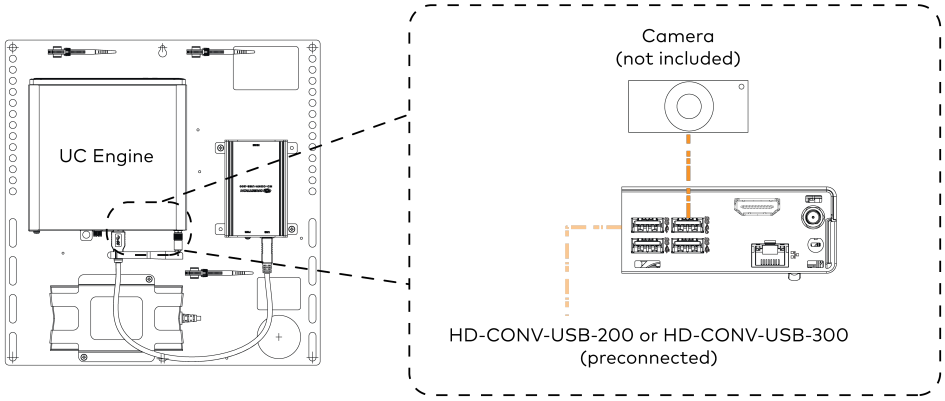

USB
UC Engine to camera (not included)

3. Connect a laptop to the HD-CONV-USB-200 or HD-CONV-USB-300.

UC Bracket Assembly with HD-CONV-USB-200

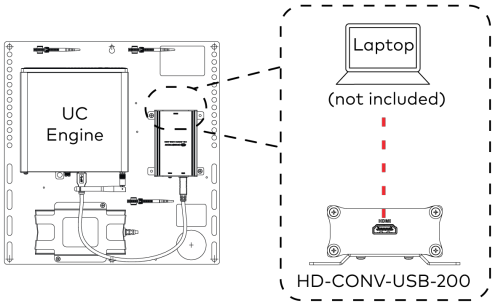

or

UC Bracket Assembly with HD-CONV-USB-300

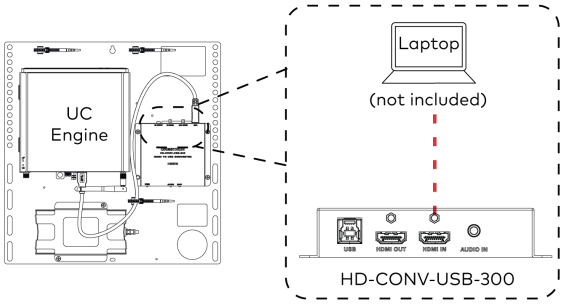

HDMI
20 ft (6.1 m) HDMI cable

4. Bundle the cables to the bracket assembly with the integrated cable tie wraps. The cable tie wraps are reusable.

Bundle Cables

Bundle the cables together and use a provided tie wrap to secure the bundle to one of the positions on the cable retention plate at the rear of the device. Avoid bundling power and data cables together.

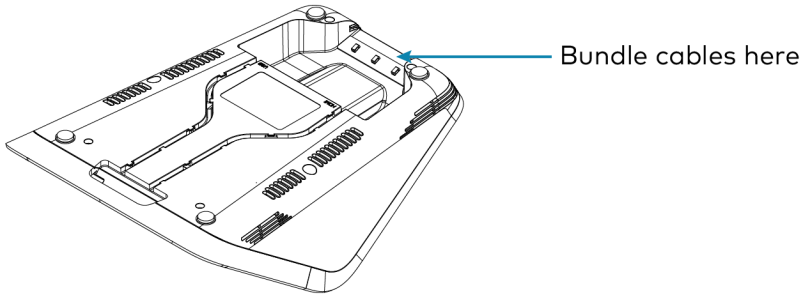

Apply Power

Press the power button on the bottom of the UC Engine and apply power to all of the other devices in the system.

Configure the Conference Device

1. On a computer, enter the IP address displayed on the conference device into a web browser.

   NOTES:
   - The device and computer must be on the same network switch and VLAN.
   - A login with administrative rights for the device is required.

2. Enter the following information in the appropriate fields:
   - **UC-Engine Address:** Enter the IP address or hostname of the UC Engine.

     NOTE: The hostname is printed on a label affixed to the UC Engine.

   - **UC-Engine Port**: By default, port number 49500 is used. If a different port number has been configured on the UC Engine, enter that port number instead.
   - **UC-Engine Admin Username**: Enter the username for the UC Engine. The default username is "admin".
   - **UC-Engine Admin Password**: Enter the login password for the UC Engine. The default password is "crestron".
3. Select **Save Changes.**

4. On the UC Engine, connect a USB keyboard and mouse (not included) to sign in to the Zoom Rooms service with an activation code or sign-in credentials (email and password).

   > **NOTE:** The Zoom Rooms Video mode allows sign-in only through the UC Engine. Therefore, to view the following instructions, use the conference room display connected to the UC Engine.

   - **Activation Code:**
     a. Select **Enter Activation Code**.
     b. Enter the 16-digit activation code provided by the IT administrator managing the Zoom portal to activate the Zoom Room assigned to the activation code. The Zoom Rooms Conference Room screen is shown on the display.
   - **Sign In:**
     a. Select **Sign In**.
     b. Enter the Zoom Room credentials and tap **Sign In**.
     c. Select the conference room name from the list and tap **Next**. The Zoom Rooms Conference Room screen is shown on the display.
5. Visit the Zoom portal, navigate to **Room Management** > **Zoom Rooms** > **(Room Name)** > **Room Settings** > **Rooms Profile** > **Devices**.
6. Enable the **Use Windows-attached Zoom Rooms Controller with specific Windows Monitor Hardware IDs** setting. Then, copy and paste the following string into the text field: Crestron:TCT009A,Crestron:FUN0216,Crestron:FUN0270

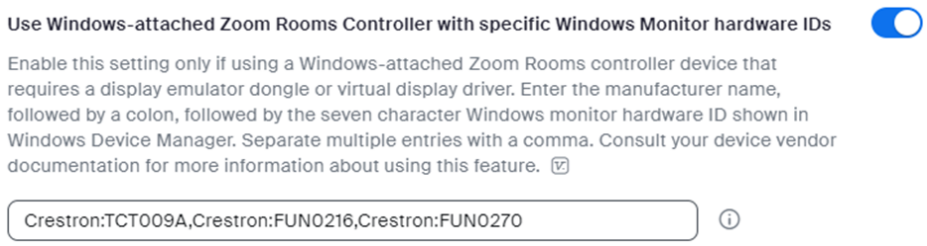

7. On the conference device, tap **Settings**. If a password is required, enter the password (the default password is "1234"). The **Settings** screen is displayed.
8. Tap **Microphone** and select the conference device as the source.
9. Tap **Speaker** and select the conference device as the source.
10. Tap **Home** to exit.

Configure the System

Refer to the Configuration on page 553 section to configure system features.

For detailed information on using Zoom Rooms, refer to the Zoom Rooms Help Center.

UC-MX70-NC-Z

Minimum Requirements

Ensure that the below requirements are met prior to setting up the system.

- A certified USB Camera (not included).
- A video display (not included) connected to the UC Engine. A second display is optional.
- A Zoom Rooms account or activation code (not included).

In The Box

Qty.	Description
	UC Bracket Assembly
1	UC Bracket Assembly with UC Engine and HDMI or AV over CAT5 content ingest (UC-BRKT-260-P-Z-ASSY, 6512692)
1	Power pack (2045870)
2	Anchor, Drywall, Plastic, 3/8 in. x 1/2 in. (9.5 mm x 12.7 mm) (2052565)
1	Key, Anchor (4529654)
2	Screw, 8-AB x 1-1/2 in. (38.1 mm), Pan Head, Combo (2052567)
4	Tie Wrap (2047935)
	Mercury X Tabletop Conference Device
1	Tabletop Conference Device, Microsoft Teams video (6510610)
1	Cable, CAT5e, RJ-45 - RJ-45, 12 ft (3.7 m) (2033988)
1	Cable Retention Plate (2047908)
1	Power supply (2045873) with cord (2042043)
3	Tie Wrap (2047935)
	Microphone Pod
1	Extension Microphone Pod (6508084)
	Additional Items
2	Cable, CAT6a, RJ-45 - RJ-45, 20 ft (6.1 m) (6507640)
1	Cable, CAT5e, RJ-45 - RJ-45, 7 ft (2.1 m) (6509924)
1	Cable, HDMI 2.1, 6 ft (1.8 m) (6512150)
1	Cable, DisplayPort™ to HDMI, 6 ft (1.8 m) (6508282)
1	Cable, USB 2.0, A - Micro-B, 6 ft (1.8 m) (6510947)
1	Cable, thin HDMI, 6 ft (1.8 m) (6510946)

Mount Devices

Mount the UC Bracket Assembly

Mount the UC Bracket Assembly to VESA® compliant display devices, a wall, or other building structure. Anchors and screws are supplied for installation on walls with 3/8 in. (9.5 mm) to 3/4 in. (19 mm) thickness.

CAUTION: Preinstalled screws may protrude from the back of the UC Bracket Assembly. Exercise caution when handling the UC Bracket Assembly to avoid scratching or damaging surfaces.

NOTE: The integrated cable tie wraps are reusable. Avoid damaging the cable tie wraps.

Mount the Tabletop Conference Device

The tabletop conference device can be placed on any flat surface or secured on a table using the CCS-UCA-SMK tabletop swivel mount kit (sold separately).

System Overview

When connections are complete, the system appears as shown below. Refer to Make Connections on page 531 for detailed connection instructions.

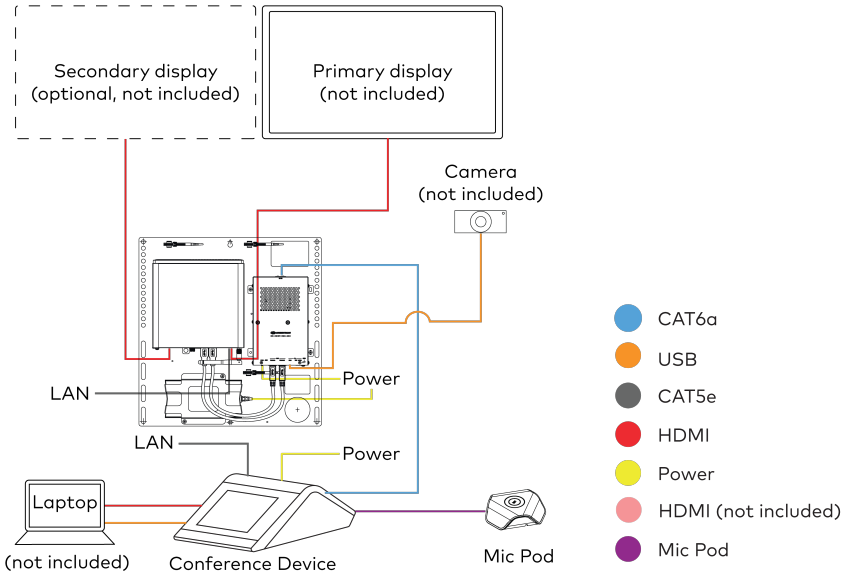

Make Connections

1. Make UC Engine connections as shown in the following illustration.

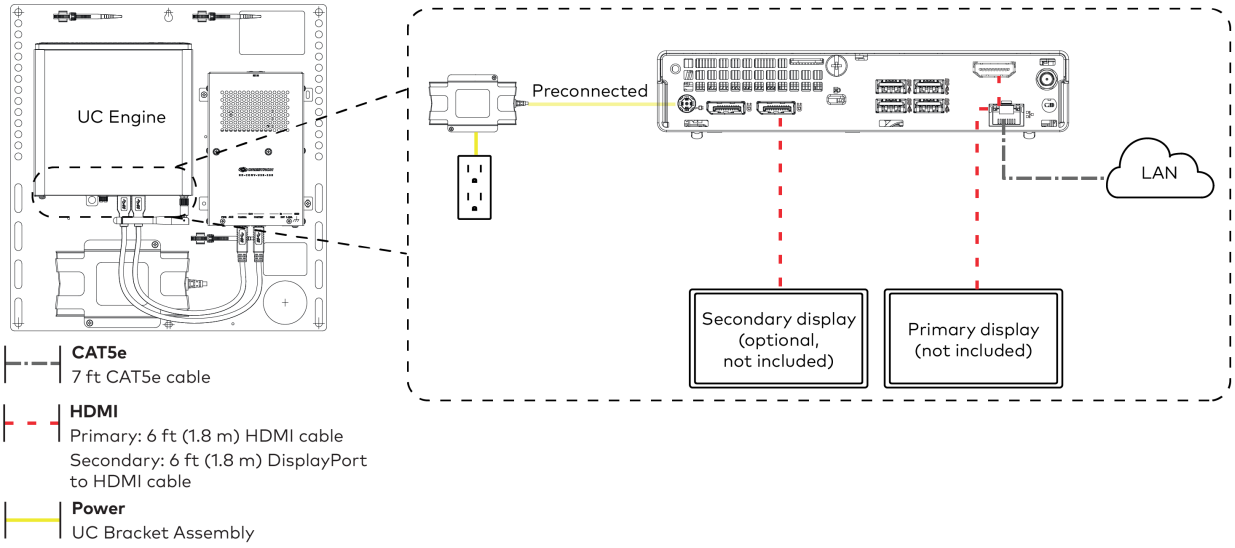

2. Make network, content ingest, laptop, and power connections on the bottom of the conference device. Connect the conference device's power supply to an AC power outlet.

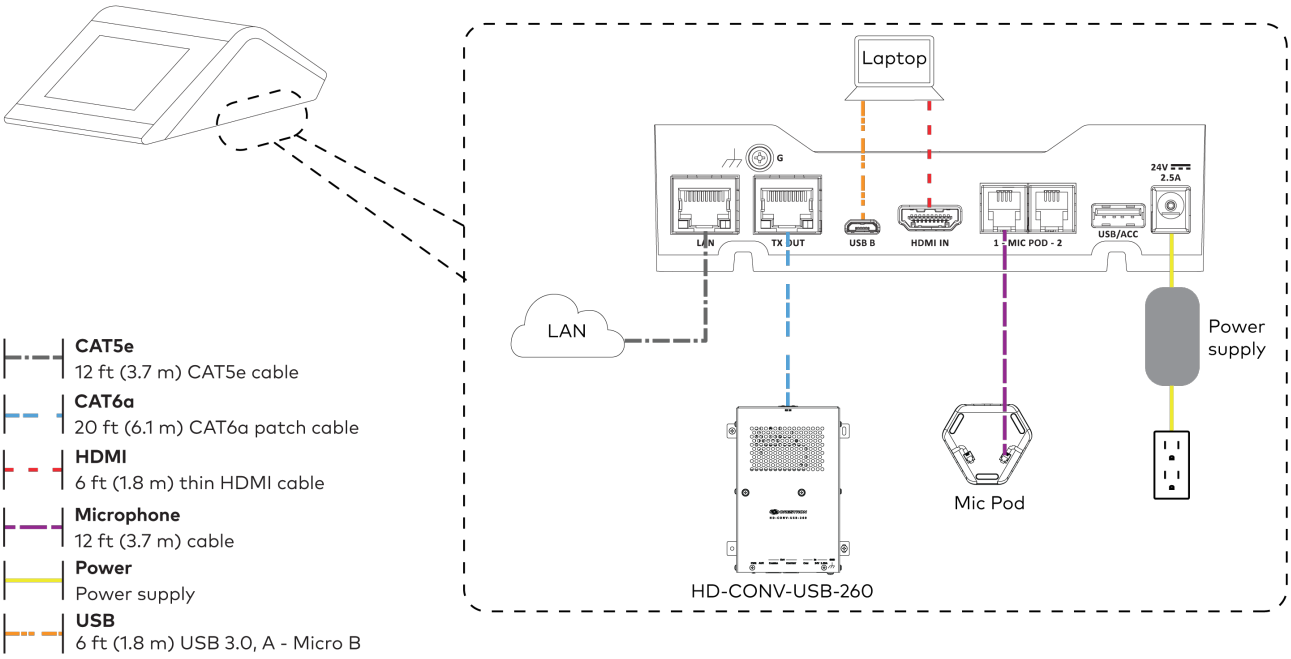

CAT5e
12 ft (3.7 m) CAT5e cable

CAT6a
20 ft (6.1 m) CAT6a patch cable

HDMI
6 ft (1.8 m) thin HDMI cable

Microphone
12 ft (3.7 m) cable

Power
Power supply

USB
6 ft (1.8 m) USB 3.0, A - Micro B

3. Connect the power supply and camera (not included) to the bottom of the content ingest device (HD-CONV-USB-260). Connect the power supplies to an AC power outlet.

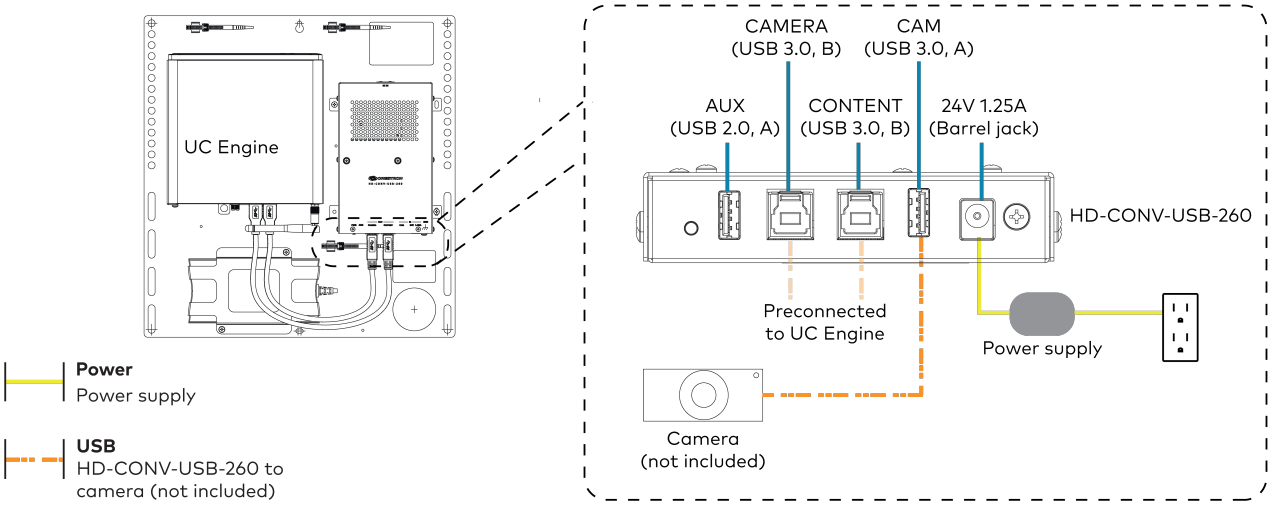

4. Bundle the cables to the bracket assembly with the integrated cable tie wraps. The cable tie wraps are reusable.

Apply Power

Press the power button on the bottom of the UC Engine and apply power to all of the other devices in the system.

Configure the Conference Device

1. On a computer, enter the IP address displayed on the conference device into a web browser.

   NOTES:
   - The device and computer must be on the same network switch and VLAN.
   - A login with administrative rights for the device is required.

2. Enter the following information in the appropriate fields:
   - **UC-Engine Address:** Enter the IP address or hostname of the UC Engine.

     NOTE: The hostname is printed on a label affixed to the UC Engine.

   - **UC-Engine Port**: By default, port number 49500 is used. If a different port number has been configured on the UC Engine, enter that port number instead.
   - **UC-Engine Admin Username**: Enter the username for the UC Engine. The default username is "admin".
   - **UC-Engine Admin Password**: Enter the login password for the UC Engine. The default password is "crestron".
3. Select **Save Changes.**

4. On the UC Engine, connect a USB keyboard and mouse (not included) to sign in to the Zoom Rooms service with an activation code or sign-in credentials (email and password).

   > **NOTE:** The Zoom Rooms Video mode allows sign-in only through the UC Engine. Therefore, to view the following instructions, use the conference room display connected to the UC Engine.

   - **Activation Code:**
     a. Select **Enter Activation Code**.
     b. Enter the 16-digit activation code provided by the IT administrator managing the Zoom portal to activate the Zoom Room assigned to the activation code. The Zoom Rooms Conference Room screen is shown on the display.
   - **Sign In:**
     a. Select **Sign In**.
     b. Enter the Zoom Room credentials and tap **Sign In**.
     c. Select the conference room name from the list and tap **Next**. The Zoom Rooms Conference Room screen is shown on the display.
5. Visit the Zoom portal, navigate to **Room Management** > **Zoom Rooms** > **(Room Name)** > **Room Settings** > **Rooms Profile** > **Devices**.
6. Enable the **Use Windows-attached Zoom Rooms Controller with specific Windows Monitor Hardware IDs** setting. Then, copy and paste the following string into the text field: Crestron:TCT009A,Crestron:FUN0216,Crestron:FUN0270

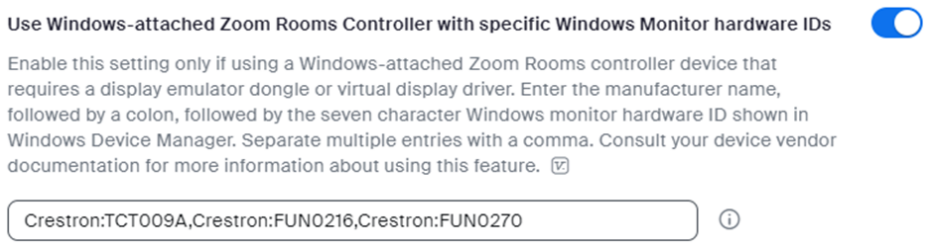

7. On the conference device, tap **Settings**. If a password is required, enter the password (the default password is "1234"). The **Settings** screen is displayed.
8. Tap **Microphone** and select the conference device as the source.
9. Tap **Speaker** and select the conference device as the source.
10. Tap **Home** to exit.

Configure the System

Refer to the Configuration on page 553 section to configure system features.

For detailed information on using Zoom Rooms, refer to the Zoom Rooms Help Center.

UC-ENGINE-BRKT-Z-UPGRD

Minimum Requirements

Ensure that the below requirements are met prior to setting up the system.

- A Crestron Flex tabletop conference device and camera.
- A video display (not included) connected to the UC Engine. A second display is optional.
- A Zoom Rooms account or activation code (not included).

In The Box

Qty.	Description
	UC Bracket Assembly
1	UC Bracket Assembly with UC Engine and HDMI content ingest (UC-BRKT-200-S-Z-ASSY, 6512690)
2	Anchor, Drywall, Plastic, 3/8 in. x 1/2 in. (9.5 mm x 12.7 mm) (2052565)
1	Key, Anchor (4529654)
2	Screw, 8-AB x 1-1/2 in. (38.1 mm), Pan Head, Combo (2052567)
4	Tie Wrap (2047935)
	Additional Items
1	Cable, CAT5e, RJ-45 - RJ-45, 7 ft (2.1 m) (6509924)
1	Cable, HDMI 2.1, 6 ft (1.8 m) (6512150)
1	Cable, HDMI, 20 ft (6.1 m) (6503567)
1	Cable, DisplayPort™ to HDMI, 6 ft (1.8 m) (6508282)
1	Cable, USB Extension, USB Type A Male-to-Female, 15 ft (4.6 m) (6508260)

Mount Devices

Mount the UC Bracket Assembly

Mount the UC Bracket Assembly to VESA® compliant display devices, a wall, or other building structure. Anchors and screws are supplied for installation on walls with 3/8 in. (9.5 mm) to 3/4 in. (19 mm) thickness.

CAUTION: Preinstalled screws may protrude from the back of the UC Bracket Assembly. Exercise caution when handling the UC Bracket Assembly to avoid scratching or damaging surfaces.

NOTE: The integrated cable tie wraps are reusable. Avoid damaging the cable tie wraps.

Configure the Conference Device

Prior to making system connections, deployed conference devices must be configured to operate as part of a complete Zoom Rooms system. Some deployed conference devices may be operating in Crestron Default mode.

To configure the conference device to operate in Zoom Rooms Video mode:

1. On a computer, enter the IP address displayed on the conference device into a web browser.

   > **NOTES:**
   > - The device and computer must be on the same network switch and VLAN.
   > - A login with administrative rights for the device is required.

2. Log in to the device and navigate to **DEVICE** > **Applications**.
3. From the **Application Mode** drop down menu, select **Zoom Rooms Video**.
4. Select **Save Changes**. The conference device will reboot in Zoom Rooms Video mode and log out all users.

Identify the UC Bracket Assembly

The UC Bracket Assembly is available in two models. Identify the model included with your Crestron Flex system. Tap or click the corresponding image below to navigate to the appropriate connection instructions.

UC Bracket Assembly with HD-CONV-USB-200

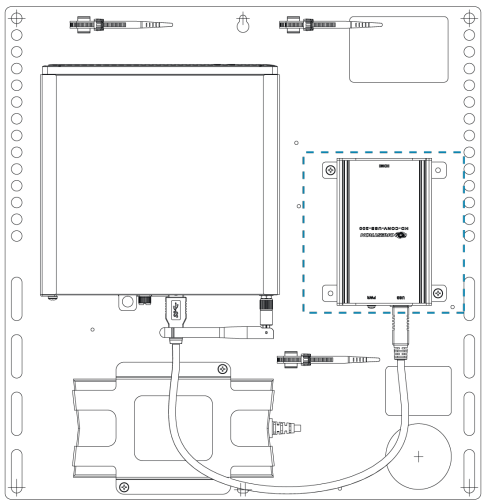

UC Bracket Assembly with HD-CONV-USB-300

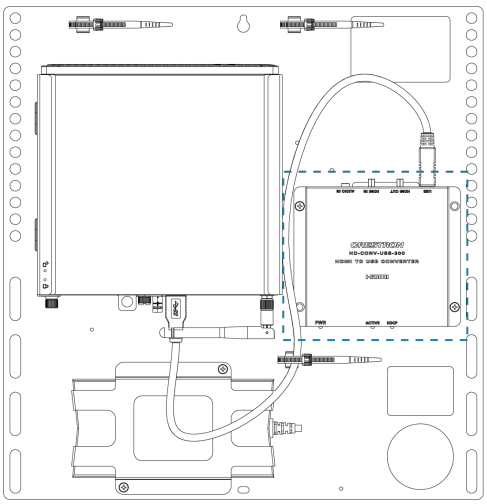

System Overview

For UC Bracket Assembly with HD-CONV-USB-200

When connections are complete, the system appears as shown below. Refer to Make Connections on page 538 for detailed connection instructions.

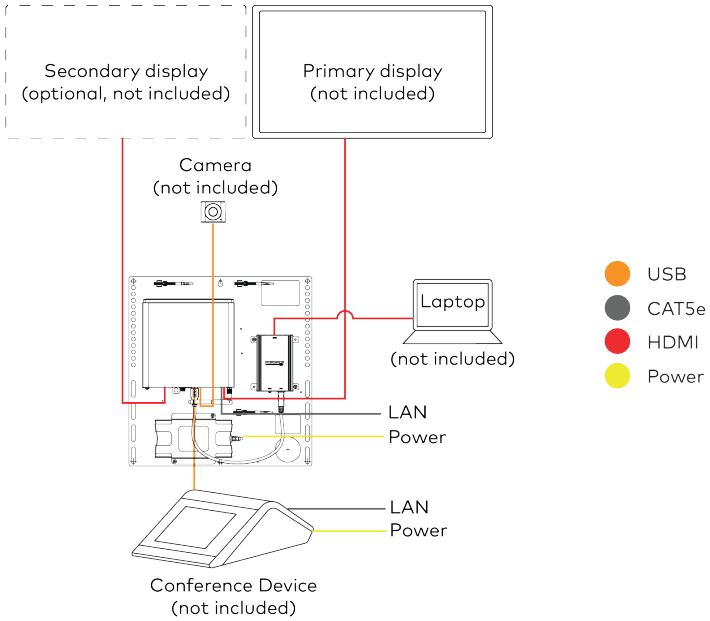

For UC Bracket Assembly with HD-CONV-USB-300

When connections are complete, the system appears as shown below. Refer to Make Connections on page 538 for detailed connection instructions.

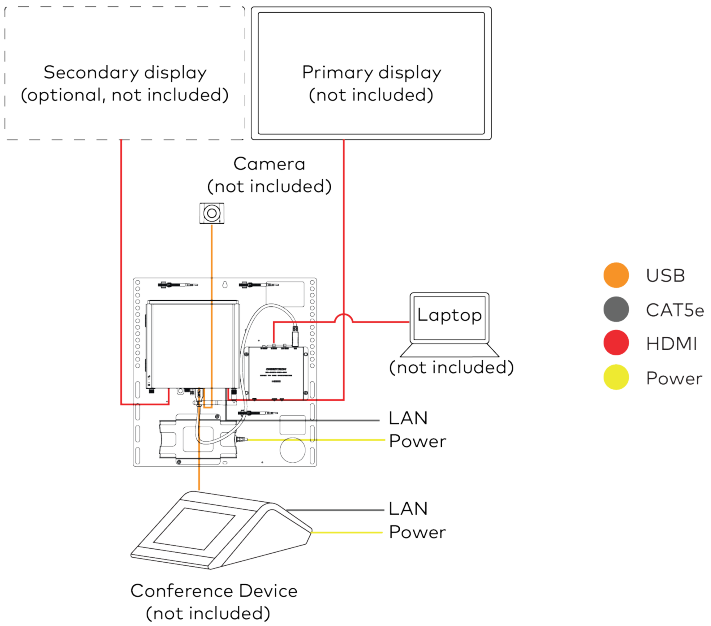

Make Connections

NOTE: For reference, the UC Bracket Assembly is shown with the HD-CONV-USB-200 in the following connection diagrams. Unless otherwise indicated in this guide, the connections remain the same for the UC Bracket Assembly with HD-CONV-USB-200 and HD-CONV-USB-300.

1. Make UC Engine connections as shown in the following illustration.

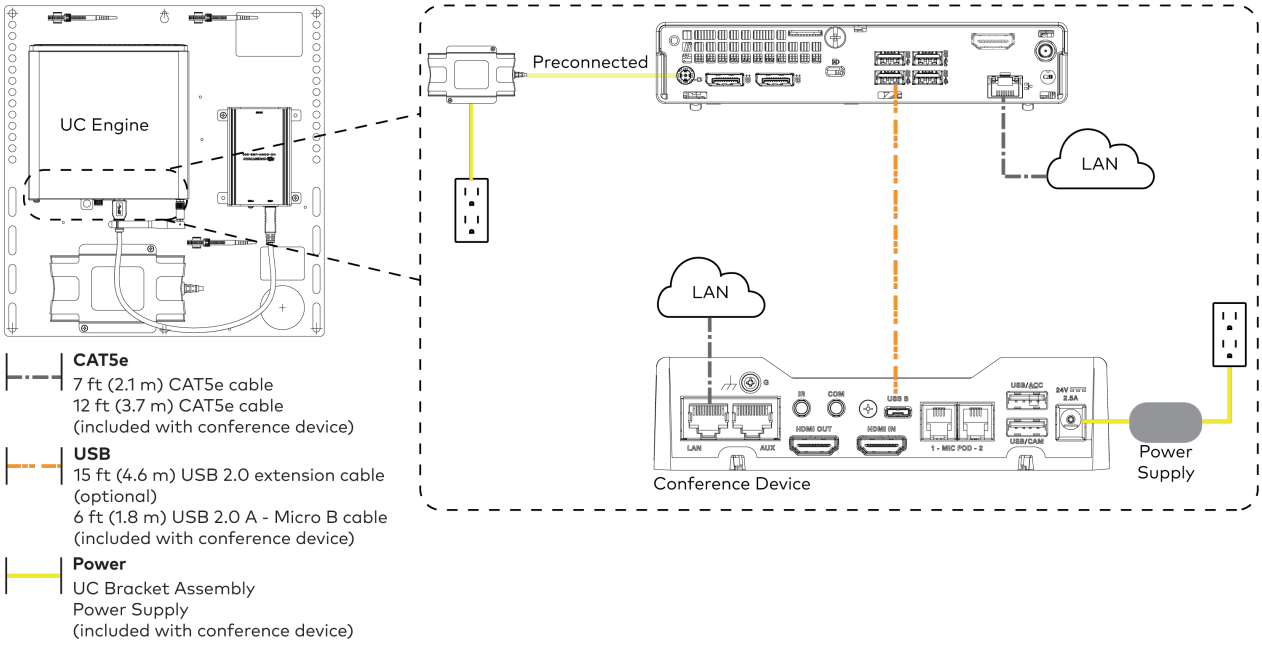

CAT5e
7 ft (2.1 m) CAT5e cable
12 ft (3.7 m) CAT5e cable
(included with conference device)

USB
15 ft (4.6 m) USB 2.0 extension cable (optional)
6 ft (1.8 m) USB 2.0 A - Micro B cable
(included with conference device)

Power
UC Bracket Assembly
Power Supply
(included with conference device)

2. Connect displays to the UC Engine.

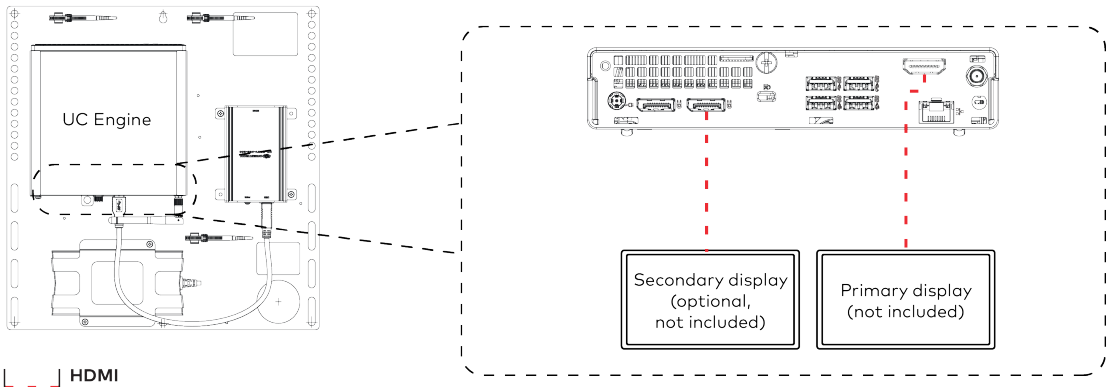

HDMI
Primary: 6 ft (1.8 m) HDMI cable
Secondary: 6 ft (1.8 m) DisplayPort to HDMI cable

3. Connect a camera (not included) to the UC Engine as shown in the image below. Do not connect the camera to any of the other USB ports.

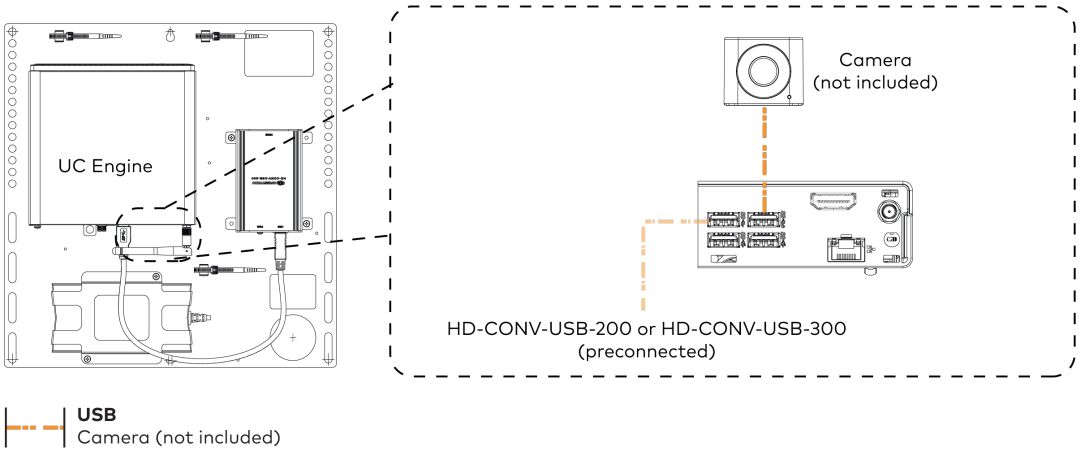

4. Connect a laptop to the HD-CONV-USB-200 or HD-CONV-USB-300.

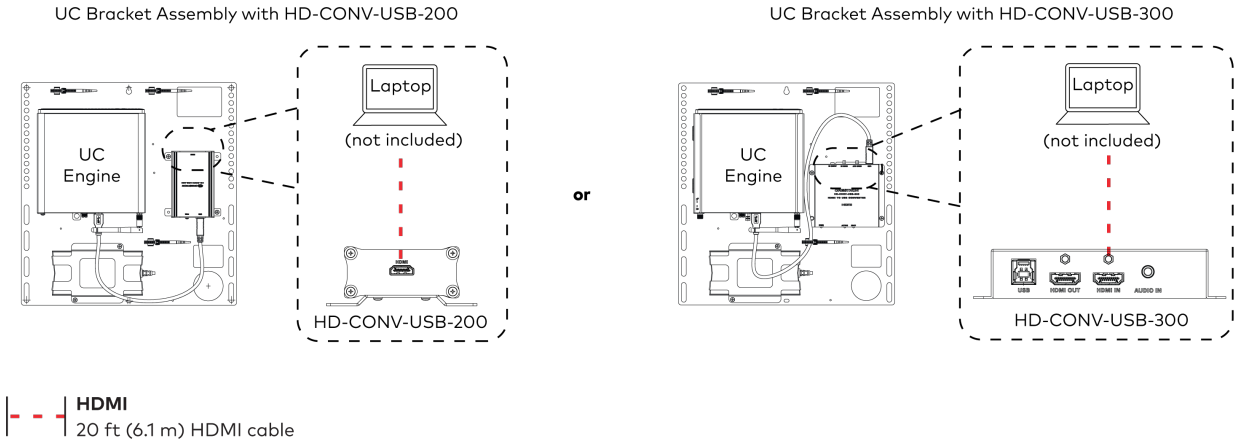

5. Bundle the cables to the bracket assembly with the integrated cable tie wraps. The cable tie wraps are reusable.

Bundle Cables

Bundle the cables together and use a provided tie wrap to secure the bundle to one of the positions on the cable retention plate at the rear of the device. Avoid bundling power and data cables together.

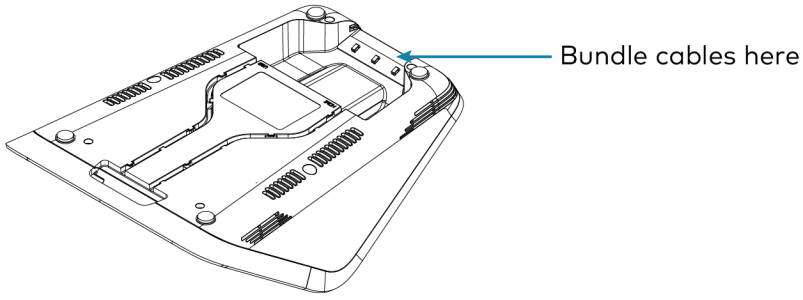

Apply Power

Press the power button on the bottom of the UC Engine and apply power to all of the other devices in the system.

Complete the Conference Device Configuration

1. On a computer, enter the IP address displayed on the conference device into a web browser.

   > **NOTES:**
   > - The device and computer must be on the same network switch and VLAN.
   > - A login with administrative rights for the device is required.

2. Enter the following information in the appropriate fields:
   - **UC-Engine Address:** Enter the IP address or hostname of the UC Engine.

     > **NOTE:** The hostname is printed on a label affixed to the UC Engine.

   - **UC-Engine Port**: By default, port number 49500 is used. If a different port number has been configured on the UC Engine, enter that port number instead.
   - **UC-Engine Admin Username**: Enter the username for the UC Engine. The default username is "admin".
   - **UC-Engine Admin Password**: Enter the login password for the UC Engine. The default password is "crestron".
3. Select **Save Changes.**
4. On the UC Engine, connect a USB keyboard and mouse (not included) to sign in to the Zoom Rooms service with an activation code or sign-in credentials (email and password).

   > **NOTE:** The Zoom Rooms Video mode allows sign-in only through the UC Engine. Therefore, to view the following instructions, use the conference room display connected to the UC Engine.

   - **Activation Code:**
     a. Select **Enter Activation Code**.
     b. Enter the 16-digit activation code provided by the IT administrator managing the Zoom portal to activate the Zoom Room assigned to the activation code. The Zoom Rooms Conference Room screen is shown on the display.
   - **Sign In:**
     a. Select **Sign In**.
     b. Enter the Zoom Room credentials and tap **Sign In**.
     c. Select the conference room name from the list and tap **Next**. The Zoom Rooms Conference Room screen is shown on the display.
5. Visit the Zoom portal, navigate to **Room Management** > **Zoom Rooms** > **(Room Name)** > **Room Settings** > **Rooms Profile** > **Devices**.

6. Enable the **Use Windows-attached Zoom Rooms Controller with specific Windows Monitor Hardware IDs** setting. Then, copy and paste the following string into the text field: Crestron:TCT009A,Crestron:FUN0216,Crestron:FUN0270

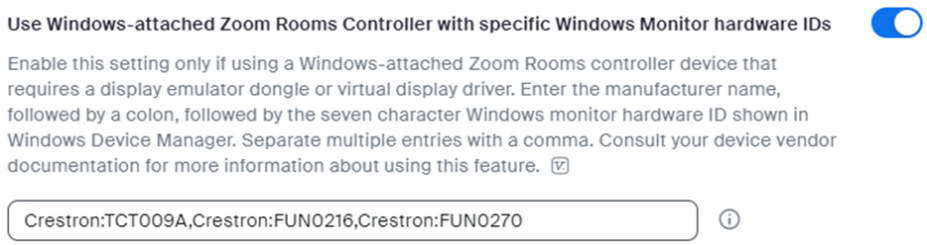

7. On the conference device, tap **Settings**. If a password is required, enter the password (the default password is "1234"). The **Settings** screen is displayed.
8. Tap **Microphone** and select the conference device as the source.
9. Tap **Speaker** and select the conference device as the source.
10. Tap **Home** to exit.

Configure the System

Refer to the Configuration on page 553 section to configure system features.

For detailed information on using Zoom Rooms, refer to the Zoom Rooms Help Center.

UC-ENGINE-BRKTX-Z-UPGRD

Minimum Requirements

Ensure that the below requirements are met prior to setting up the system.

- A Crestron Flex tabletop conference device and camera.
- A video display (not included) connected to the UC Engine. A second display is optional.
- A Zoom Rooms account or activation code (not included).

In The Box

Qty.	Description
	UC Bracket Assembly
1	UC Bracket Assembly with UC Engine and HDMI or AV over CAT5 content ingest (UC-BRKT-260-P-Z-ASSY, 6512692)
1	Power pack (2045870)
2	Anchor, Drywall, Plastic, 3/8 in. x 1/2 in. (9.5 mm x 12.7 mm) (2052565)
1	Key, Anchor (4529654)
2	Screw, 8-AB x 1-1/2 in. (38.1 mm), Pan Head, Combo (2052567)
4	Tie Wrap (2047935)
	Additional Items
1	Cable, CAT5e, RJ-45 - RJ-45, 7 ft (2.1 m) (6509924)
1	Cable, DisplayPort™ to HDMI, 6 ft (1.8 m) (6508282)

Mount Devices

Mount the UC Bracket Assembly

Mount the UC Bracket Assembly to VESA® compliant display devices, a wall, or other building structure. Anchors and screws are supplied for installation on walls with 3/8 in. (9.5 mm) to 3/4 in. (19 mm) thickness.

CAUTION: Preinstalled screws may protrude from the back of the UC Bracket Assembly. Exercise caution when handling the UC Bracket Assembly to avoid scratching or damaging surfaces.

NOTE: The integrated cable tie wraps are reusable. Avoid damaging the cable tie wraps.

Configure the Conference Device

Prior to making system connections, deployed conference devices must be configured to operate as part of a complete Zoom Rooms system. Some deployed conference devices may be operating in Crestron Default mode.

To configure the conference device to operate in Zoom Rooms Video mode:

1. On a computer, enter the IP address displayed on the conference device into a web browser.

   NOTES:
   - The device and computer must be on the same network switch and VLAN.
   - A login with administrative rights for the device is required.

2. Log in to the device and navigate to **DEVICE** > **Applications**.
3. From the **Application Mode** drop down menu, select **Zoom Rooms Video**.
4. Select **Save Changes**. The conference device will reboot in Zoom Rooms Video mode and log out all users.

System Overview

When connections are complete, the system appears as shown below. Refer to Make Connections on page 544 for detailed connection instructions.

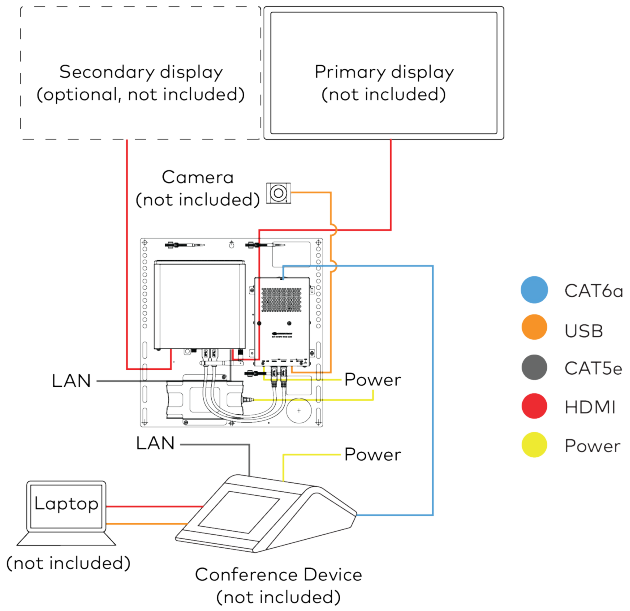

Make Connections

1. Make UC Engine connections as shown in the following illustration.

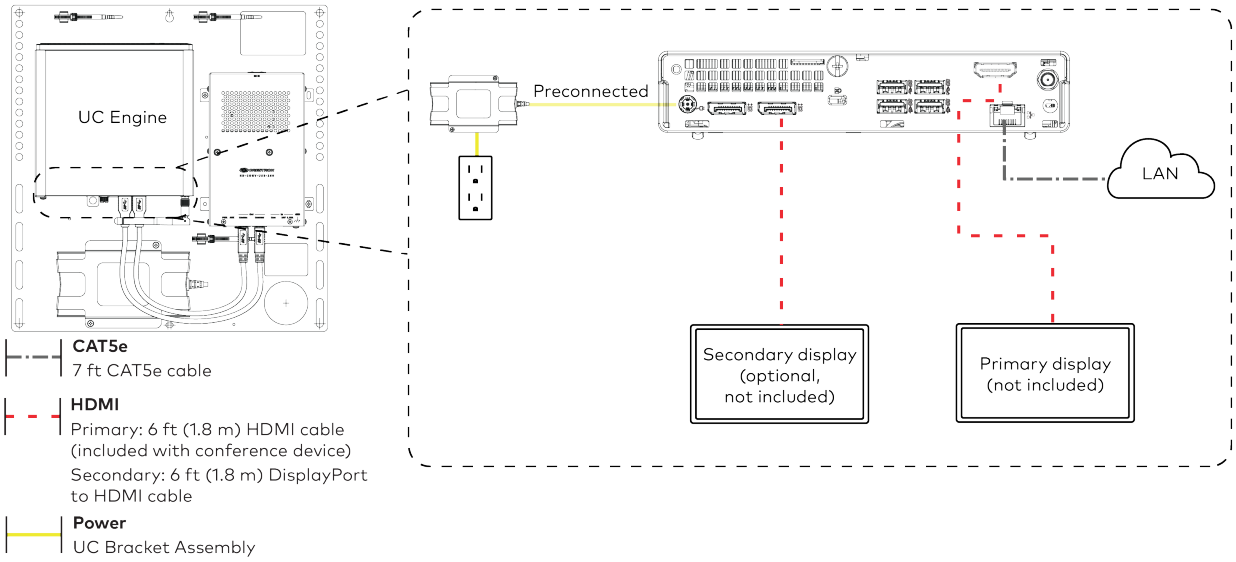

2. Connect the power supply and camera to the bottom of the content ingest device (HD-CONV-USB-260). Connect the power supply to an AC power outlet.

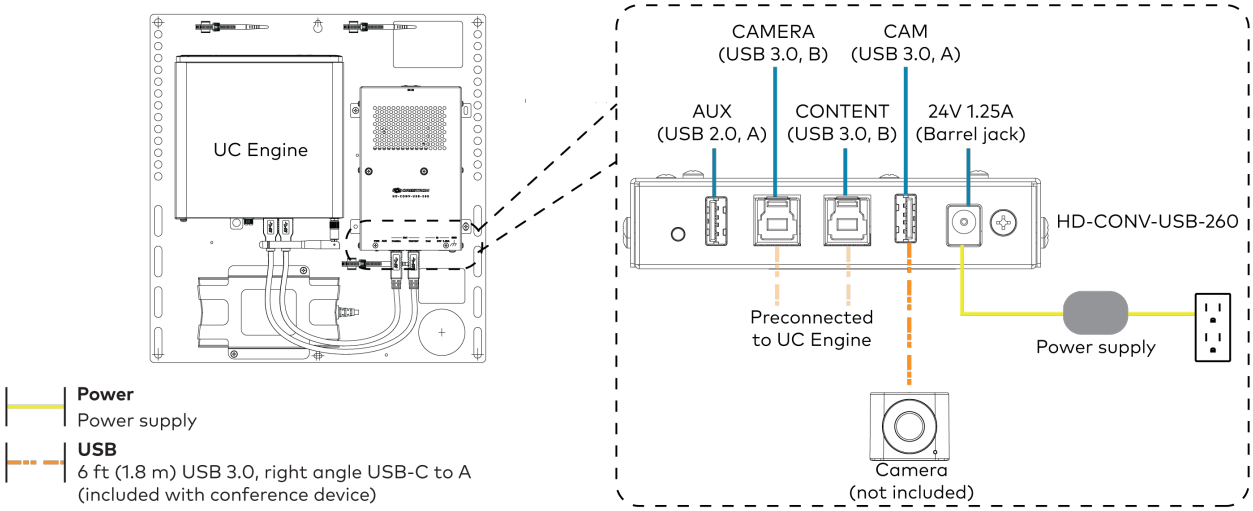

3. Make network, content ingest, laptop, and power connections on the bottom of the conference device. Connect the conference device's power supply to an AC power outlet.

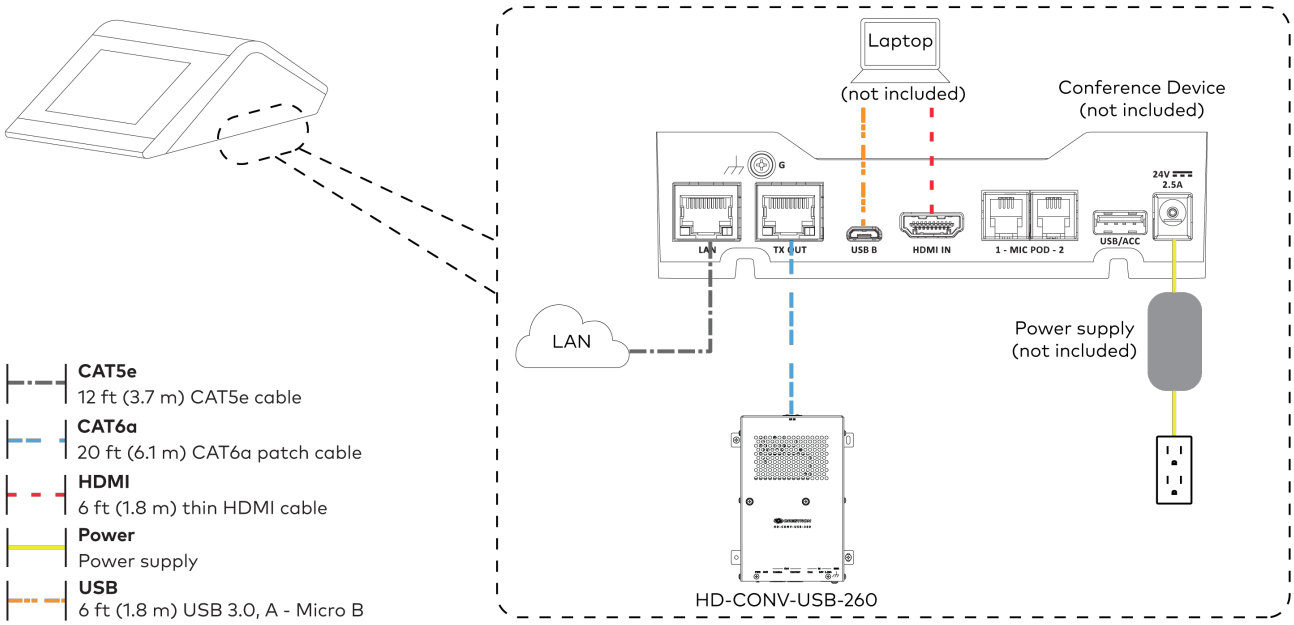

4. Bundle the cables to the bracket assembly with the integrated cable tie wraps. The cable tie wraps are reusable.

Bundle Cables

Bundle the cables together and use a provided tie wrap to secure the bundle to one of the positions on the cable retention plate at the rear of the device. Avoid bundling power and data cables together.

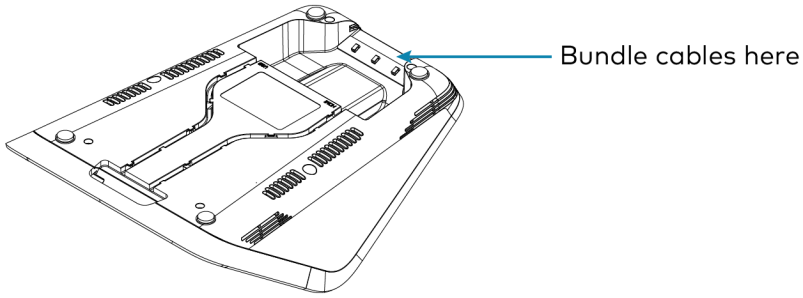

Apply Power

Press the power button on the bottom of the UC Engine and apply power to all of the other devices in the system.

Complete the Conference Device Configuration

1. On a computer, enter the IP address displayed on the conference device into a web browser.

   NOTES:
   - The device and computer must be on the same network switch and VLAN.
   - A login with administrative rights for the device is required.

2. Enter the following information in the appropriate fields:
   - **UC-Engine Address:** Enter the IP address or hostname of the UC Engine.

     NOTE: The hostname is printed on a label affixed to the UC Engine.

   - **UC-Engine Port**: By default, port number 49500 is used. If a different port number has been configured on the UC Engine, enter that port number instead.
   - **UC-Engine Admin Username**: Enter the username for the UC Engine. The default username is "admin".
   - **UC-Engine Admin Password**: Enter the login password for the UC Engine. The default password is "crestron".
3. Select **Save Changes.**
4. On the UC Engine, connect a USB keyboard and mouse (not included) to sign in to the Zoom Rooms service with an activation code or sign-in credentials (email and password).

   NOTE: The Zoom Rooms Video mode allows sign-in only through the UC Engine. Therefore, to view the following instructions, use the conference room display connected to the UC Engine.

   - **Activation Code:**
     a. Select **Enter Activation Code**.
     b. Enter the 16-digit activation code provided by the IT administrator managing the Zoom portal to activate the Zoom Room assigned to the activation code. The Zoom Rooms Conference Room screen is shown on the display.
   - **Sign In:**
     a. Select **Sign In**.
     b. Enter the Zoom Room credentials and tap **Sign In**.
     c. Select the conference room name from the list and tap **Next**. The Zoom Rooms Conference Room screen is shown on the display.
5. Visit the Zoom portal, navigate to **Room Management** > **Zoom Rooms** > **(Room Name)** > **Room Settings** > **Rooms Profile** > **Devices**.

6. Enable the **Use Windows-attached Zoom Rooms Controller with specific Windows Monitor Hardware IDs** setting. Then, copy and paste the following string into the text field: Crestron:TCT009A,Crestron:FUN0216,Crestron:FUN0270

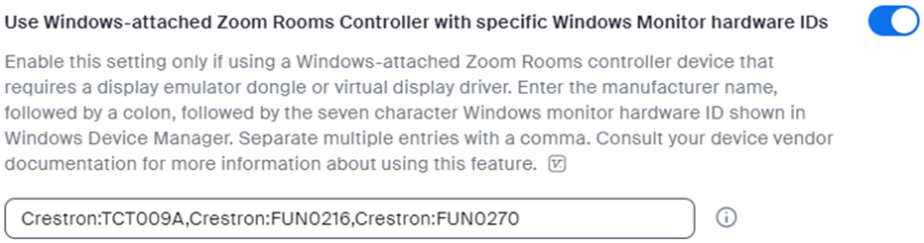

7. On the conference device, tap **Settings**. If a password is required, enter the password (the default password is "1234"). The **Settings** screen is displayed.
8. Tap **Microphone** and select the conference device as the source.
9. Tap **Speaker** and select the conference device as the source.
10. Tap **Home** to exit.

Configure the System

Refer to the Configuration on page 553 section to configure system features.

For detailed information on using Zoom Rooms, refer to the Zoom Rooms Help Center.

UC-ENGINE-BRKT-Z-UPGRD-BRKTX

Minimum Requirements

Ensure that the below requirements are met prior to setting up the system.

- A Zoom Rooms account or activation code (not included).
- A fully functional existing B/MM/C series small or custom room solution with standard bracket assembly.

In The Box

Qty.	Description
	UC Bracket Assembly
1	UC Bracket Assembly with UC Engine and HDMI or AV over CAT5 content ingest (UC-BRKT-260-P-Z-ASSY, 6512692)
1	Power pack (2045870)
2	Anchor, Drywall, Plastic, 3/8 in. x 1/2 in. (9.5 mm x 12.7 mm) (2052565)
1	Key, Anchor (4529654)
2	Screw, 8-AB x 1-1/2 in. (38.1 mm), Pan Head, Combo (2052567)
4	Tie Wrap (2047935)
	UC Presentation Transmitter with Cable Organizer
1	Presentation transmitter (6510936)
1	Cable Organizer
1	Power pack (2056363) with cord (2001134)
1	Bracket, power supply (2056257)
1	Cable, USB to USB, 6.56 ft (2 m) (2056116)
1	Cable, HDMI®, 6.56 ft (2 m) (2056117)
1	Cable, USB 2.0, A to Micro B, 6.56 ft (2 m) (2055504)
8	Screw, 10-9 x 5/8 in. (15.9 mm), Pan Head, Phillips, Black (2054365)
	Additional Items
1	Cable, CAT6a, RJ-45 - RJ-45, 20 ft (6.1 m) (6507640)
1	Cable, DisplayPort™ to HDMI, 6 ft (1.8 m) (6508282)

Mount Devices

Mount the UC Bracket Assembly

Mount the UC Bracket Assembly to VESA® compliant display devices, a wall, or other building structure. Anchors and screws are supplied for installation on walls with 3/8 in. (9.5 mm) to 3/4 in. (19 mm) thickness.

CAUTION: Preinstalled screws may protrude from the back of the UC Bracket Assembly. Exercise caution when handling the UC Bracket Assembly to avoid scratching or damaging surfaces.

NOTE: The integrated cable tie wraps are reusable. Avoid damaging the cable tie wraps.

Mount the UC Presentation Transmitter

Mount the UC Presentation Transmitter to the underside of a table using the supplied screws. The supplied screws support installation on tables with a thickness of 1 in. (25.4 mm) minimum.

Mount the Cable Organizer for the UC-PR

Mount the Cable Organizer according to the Cable Organizer for the UC-PR (Doc. 8966).

Connections

The UC-ENGINE-BRKT-Z-UPGRD-BRKTX kit contains all the items that can be used to upgrade an existing UC-B/C/MM series small or custom room solution to UC-BX/CX/MMX series advanced BYOD solution.

Upgrading a UC-B Series solution

1. Replace the existing standard bracket assembly with the included UC-BRKT-260-P-Z-ASSY bracket assembly.
2. Use the existing components, cables, and the new included cables to make connections as detailed in the following section:
    - UC-BX30-Z and UC-BX30-Z-WM on page 401
    - UC-BX31-Z and UC-BX31-Z-WM on page 415

Upgrading a UC-C Series solution

1. Replace the existing standard bracket assembly with the included UC-BRKT-260-P-T-ASSY bracket assembly.
2. Use the existing components, cables, and the new included cables to make connections as detailed in the following section:
    - UC-CX100-Z and UC-CX100-Z-WM on page 429

Upgrading a UC-MM Series solution

1. Replace the existing standard bracket assembly with the included UC-BRKT-260-P-T-ASSY bracket assembly.

2. Use the existing components, cables, and the new included cables to make connections as detailed in the following sections:
    - UC-MMX30-Z and UC-MMX30-Z-I on page 456
    - UC-MMX30-NC-Z and UC-MMX30-NC-Z-I on page 471

Zoom Rooms with ASUS UC Engine

To install any Crestron Flex solutions listed below, follow the respective link to the Quick Start guide for instructions.

Crestron Flex Solutions	Quick Start Guide
• UC-B30-Z	Quick Start: UC-B30-Z
• UC-BX30-Z	Quick Start: UC-BX30-Z
• UC-B30-Z-WM	Quick Start: UC-B30-Z-WM
• UC-BX30-Z-WM	Quick Start: UC-BX30-Z-WM
• UC-C100-Z	Quick Start: UC-C100-Z
• UC-CX100-Z	Quick Start: UC-CX100-Z
• UC-C100-Z-WM	Quick Start: UC-C100-Z-WM
• UC-CX100-Z-WM	Quick Start: UC-CX100-Z-WM
• UC-MM30-Z • UC-MM30-Z-I	Quick Start: UC-MM30-Z(-I)
• UC-MMX30-Z • UC-MMX30-Z-I	Quick Start: UC-MMX30-Z(-I)
• UC-M50-Z	Quick Start: UC-M50-Z
• UC-M50-Z-UPGRD	Quick Start: UC-M50-Z-UPGRD
• UC-MX50-Z	Quick Start: UC-MX50-Z
• UC-MX50-Z-UPGRD	Quick Start: UC-MX50-Z-UPGRD
• UC-M70-Z	Quick Start: UC-M70-Z
• UC-MX70-Z	Quick Start: UC-MX70-Z

Configuration

This section provides the following information:

Zoom Rooms Software Updates

- **UC Engine Firmware**: Updates for the UC Engine in a Zoom Rooms configuration can be performed through the UC Engine's Windows Update service.
- **Zoom Rooms software**: Receives updates from the Zoom portal or through the Windows Update service.
- **Touch Screen control device**: Receives application updates from the Zoom portal and both application and firmware updates through the Crestron auto-update service.
- **Crestron Mercury control device**: Crestron Mercury control devices in Zoom Rooms Video mode will receive the application update from either the Windows Update service or when the Zoom Rooms software is updated in the Zoom portal. Firmware updates will be delivered through the Crestron auto-update service.

> **NOTE:** A user requires an admin login to update an application or firmware using the Windows Update service.

Crestron Settings App

After setting up Zoom Rooms, use the Crestron Settings app for further configuration. A USB keyboard and mouse are required to use the Crestron Settings app.

> **NOTE:** If a USB port is not available, temporarily disconnect the system's camera.

To open the Crestron Settings App:

1. Connect a USB keyboard and mouse to a USB port on the UC Engine located on the bracket assembly.
2. Press **Ctrl** + **Alt** + **Del** and select **Sign Out**. The login screen is shown.

   Login Screen



3. Use the mouse and keyboard to click **Admin** and enter the administrator password (the default is "crestron"). The Windows desktop is displayed.

Windows Desktop

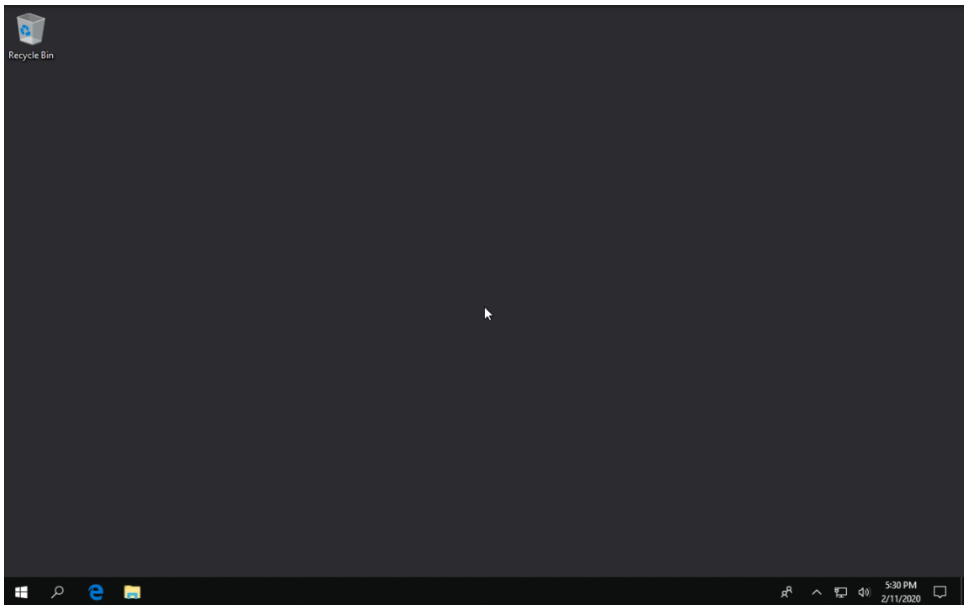

4. Click > **Crestron** folder > **Crestron Settings**. The Crestron Settings app opens.

> **NOTE:** When opening the Crestron Settings app for the first time, you must agree to the CRESTRON UNIFIED COMMUNICATIONS SOFTWARE LICENSE AGREEMENT. Click **I Agree** to continue to the Crestron Settings app.

Crestron Settings App

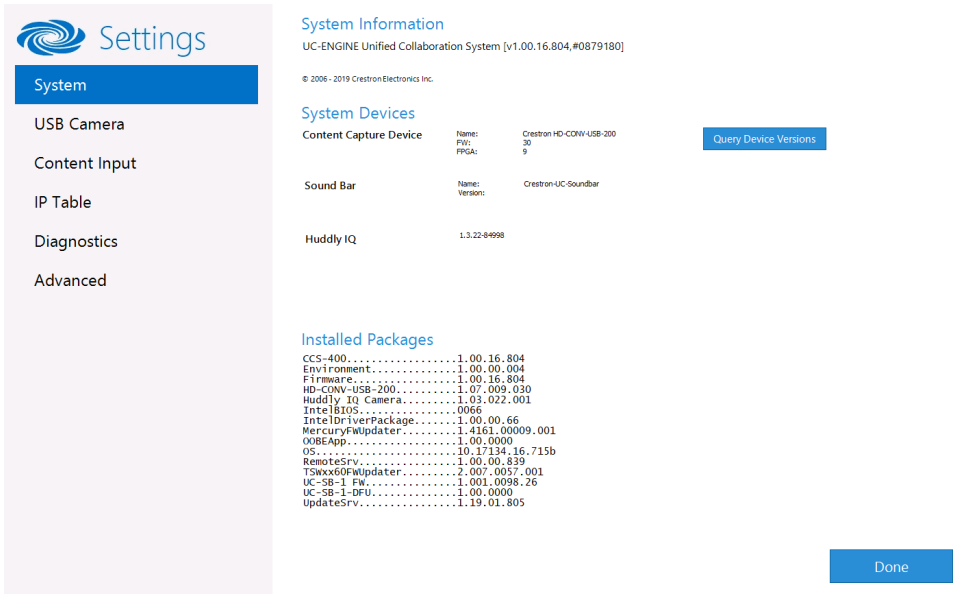

System

Use the **System** menu to view firmware versions of connected system devices and the firmware packages stored on the UC Engine.

System

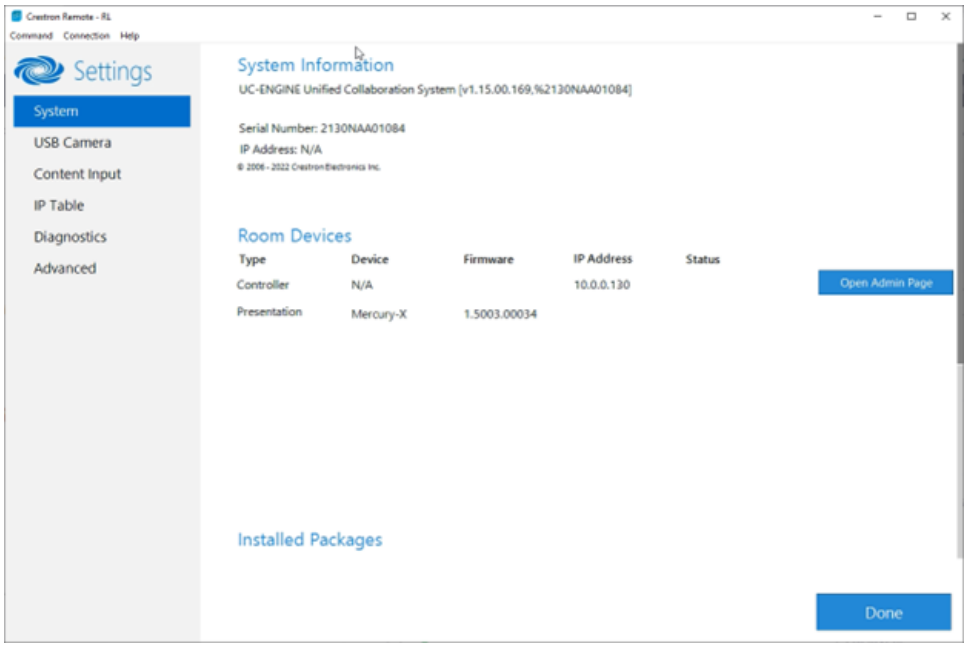

Click **Query Device Versions** to view the firmware versions of the connected system devices.

Click **Done** to exit the Crestron Settings app. The Windows desktop is displayed.

USB Camera

Click **USB Camera** to display the USB Camera menu.
Use the **USB Camera** menu to adjust the zoom, tilt, and pan, recall preset settings, store preset settings, and control the Genius Framing feature (available for specific cameras).

USB Camera

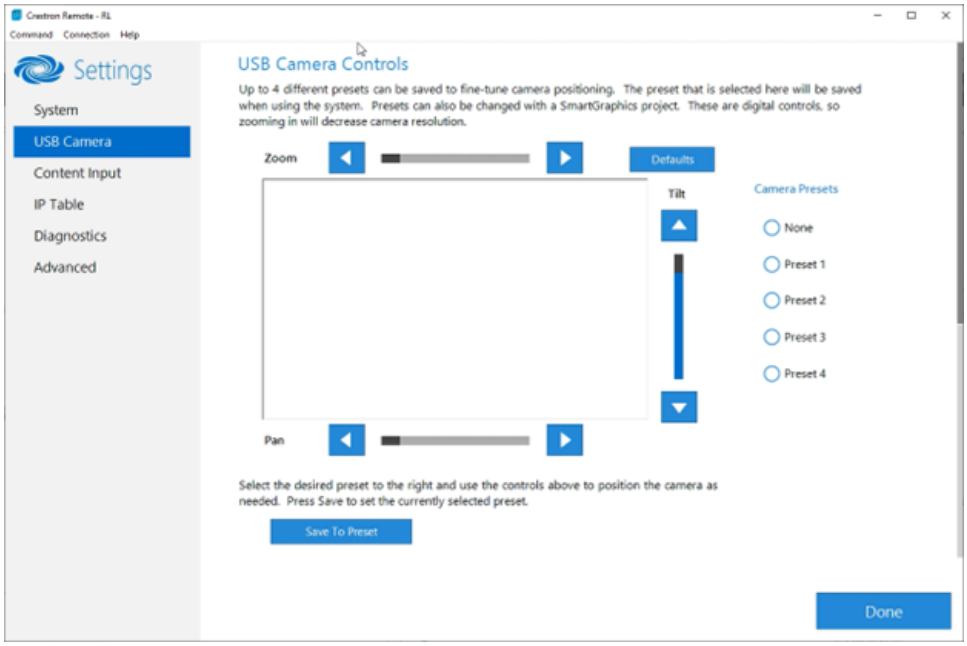

Adjust Tilt, Pan, or Zoom

The tilt, pan, and zoom on a connected camera can be remotely adjusted from the USB Camera screen.

> **NOTE:** Tilt, pan, and zoom settings may not work with all cameras.

To adjust the tilt, pan, or zoom, select a preset and adjust as necessary.

- Click **Zoom I** or **H** to adjust the zoom.
- Click **Pan I** or **H** to adjust the pan.
- Click **Tilt K** or **J** to adjust the camera tilt.
- Click **Defaults** to return the camera to its default settings.

Save a Preset

Tilt, pan, and zoom settings can be saved for recall later. To save a preset setting:

1. Click one of the four available Camera Presets locations on the right side of the display.
2. Adjust the tilt, pan, and zoom as described in Adjust Tilt, Pan, or Zoom on page 558.
3. Click **Save To Preset** to save the settings.

Recall a Preset

Click a Preset on the right side to recall a preset.

Genius Framing (systems with a CCS-CAM-USB-F-400 or UC-SB1-CAM-FLEX)

Crestron Flex solutions that use a CCS-CAM-USB-F-400 Huddly IQ Collaboration Camera or a UC-SB1-CAM-FLEX UC Video Conference Smart Soundbar & Camera can use the camera's built-in Genius Framing feature. Genius Framing automatically detects and frames people in the camera's field of view.

By default, Genius Framing is set to **ON**. Set the switch to **OFF** to disable Genius Framing.

> **NOTE:** Genius Framing can be controlled by the XiO Cloud service if the UC Engine is registered with the service.

Content Input

Click **Content Input** to display information about the HDMI content input.

Content Input

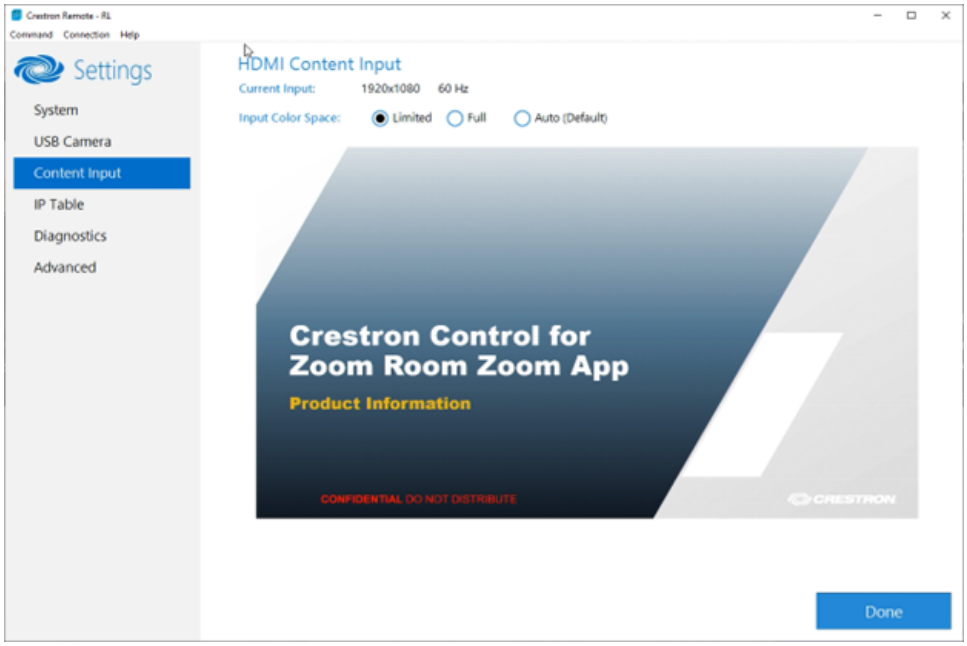

Select one of the following settings of the **Input Color Space** feature:

- **Limited**: Select if the black portion of the image appears washed out.
- **Full**: Select if the shadow detail of the picture appears missing.
- **Auto (Default)**: Default setting (selected by default).

IP Table

Click **IP Table** to display the IP Table menu.
Configure the IP table to allow Crestron Flex to be used as part of a Crestron control system. An IP table is a lookup table used by Crestron Ethernet devices to map between IP IDs and IP addresses. Use the IP Table menu to enable and configure the system for communication with a Crestron control system.

NOTE:

- A Crestron Flex's IP table can also be configured by Crestron Toolbox software. For more information, refer to the Crestron Toolbox help file.
- The touch screen's IP table must contain an entry for the control system. For more information, refer to the TSW-570, TSW-770, and TSW-1070 Product Manual (Doc. 8550) or TS-770 and TS-1070 Product Manual (Doc. 8555).

IP Table

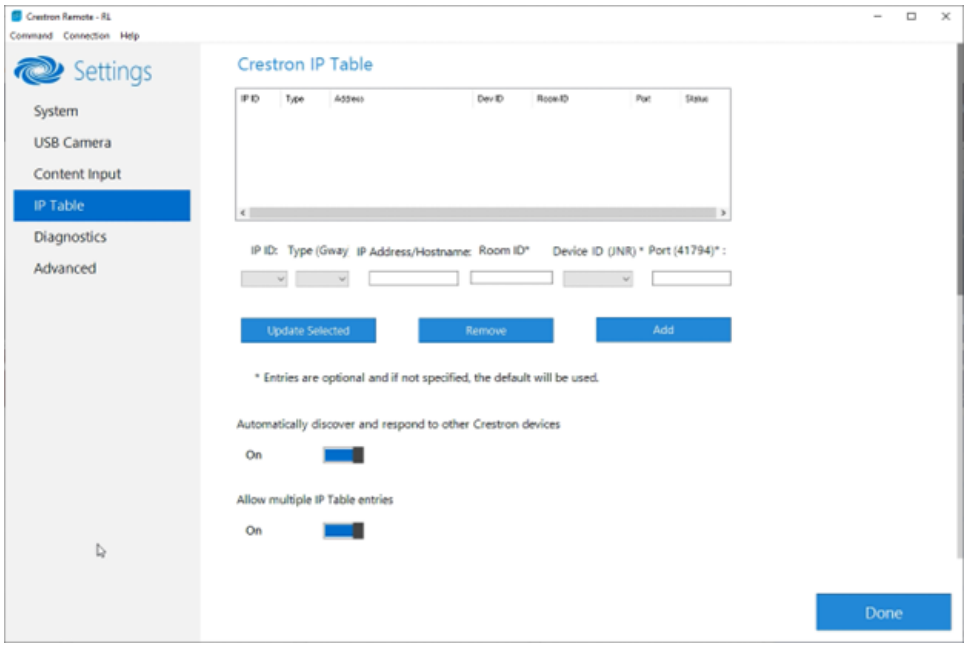

IP Table Entries

Entries in an IP table identify the control system(s) that can control Crestron Flex. Entries can be added, updated, or removed.

- Add an Entry
    a. From the IP ID drop-down list, select the system's IP ID as specified in the control system's program.

    > **NOTE:** The IP ID must match the IP ID specified for the system in the control system's program.

    b. Enter the IP address or hostname in the **IP Address/Hostname** field.
    c. If using a port other than 41794 for communications with the control system, enter it in the **Port (41794)*** field.

    > **NOTE:** This field is optional. If left blank, the default port (41794) is used.

    d. Click **Add**.
- Modify an Entry
    a. Click an entry in the IP table.
    b. Select the new IP ID, address or hostname, and port.
    c. Click **Update Selected**.
- Remove an Entry
    a. Click an entry in the IP table.
    b. Click **Remove**.

Other IP Table Functions

Set the **Automatically discover and respond to other Crestron devices** setting to **Off** to hide the system from being discovered by other devices during Autodiscovery.

Multiple control systems listed on the IP table can be allowed to control the system. Set the **Allow multiple IP Table entries** setting to **Off** to allow only one control system on the IP table.

Crestron SSL

The system can use SSL technology when connecting to a Crestron control system. To configure the system to use SSL for control system communications:

1. Set the **Use SSL for control system connections** setting to **Enabled**.
2. If certificate authentication is used, set the **Certificate Authentication** setting to **On**.
3. Enter the login credentials in the **Username** and **Password** fields.

Diagnostics

Click **Diagnostics** to display the Diagnostics menu.
Use the Diagnostics menu to view and manage system logs.

Diagnostics

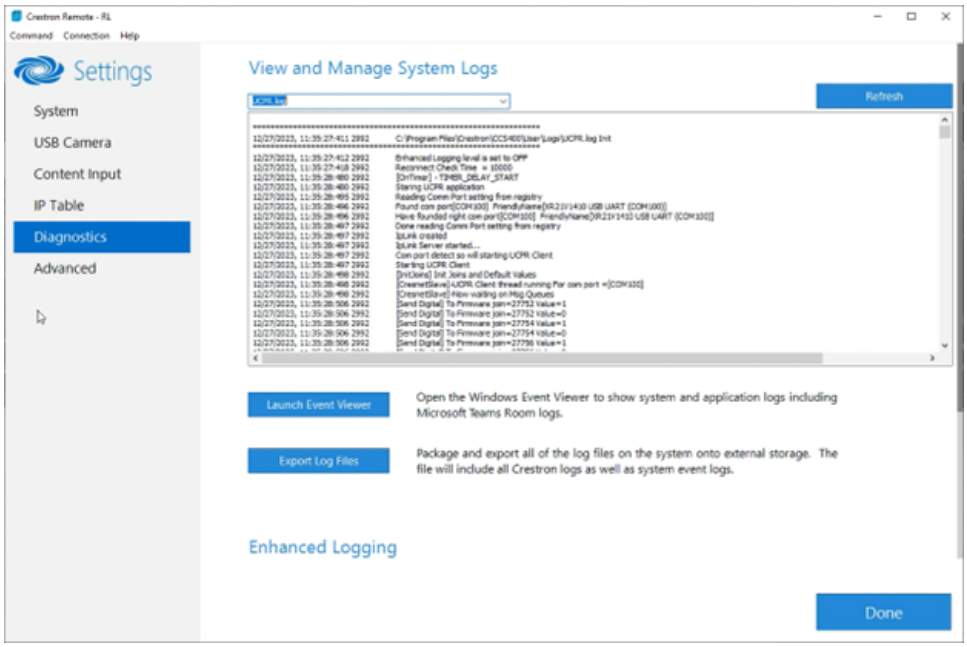

View Logs

When troubleshooting, different logs can be viewed. Select the desired log file from the **View and Manage System Logs** drop-down list to view a specific log type. Then, click **Refresh** to view the latest log data.

Windows Event Viewer

Click **Launch Event Viewer** to open the Windows event viewer that shows system and application logs.

Export Log Files

Click **Export Log Files** to package and export all the log files (including all Crestron logs and system event logs) onto external storage.

Upload Log Files

Click **Upload Log Files** to package and upload all the log files to a Crestron server for delivery to Crestron support personnel.

> **NOTE:** Internet access is required for uploading.

Enhanced Logging

Enable the enhanced logging feature only if instructed by Crestron support for advanced troubleshooting. The enhanced logs are collected during the normal export process. Turn off enhanced logging when troubleshooting is finished.

Advanced

Click **Advanced** to display the Advanced menu.
Use the Advanced menu to configure the system with MyCrestron and Crestron Fusion software in the Cloud, to switch the UC Engine application mode, or to make the Soundbar firmware mode selection (UC-SB1-CAM-FLEX only).

Advanced

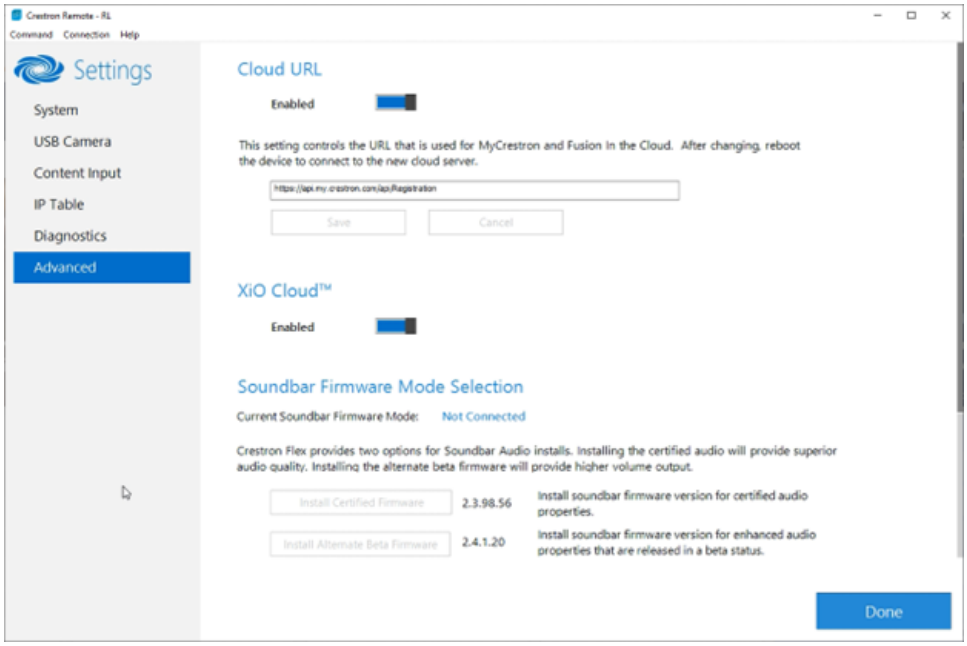

Cloud URL

Enter the URL of the Crestron Fusion server. Upon completion, the system should be brought into Crestron Fusion software as a processor. For more information, refer to the Crestron Fusion software help file.

UC-ENGINE Application Mode

Many Crestron Flex solutions that support dual displays can switch from the Zoom Rooms application to the Microsoft Teams Rooms.

> **NOTE:** This functionality is supported by the ASUS UC engine only.

For more details on switching applications, refer to Switching from Zoom Rooms to Microsoft Teams Rooms on page 566.

Soundbar Firmware Mode Selection (for systems with UC-SB1-CAM-FLEX only)

Crestron Flex with a UC-SB1-CAM-FLEX UC Video Conference Smart Soundbar can be used with firmware that provides superior sound quality or higher volume output.

If a soundbar is connected to the system, click a firmware version to install it.

Return to the Conference System

After all changes have been made, the system should be returned to regular operation. To return to regular operation:

1. Click **Done** to return to the Windows desktop.
2. Click . A menu is displayed.
3. Click , and then click **Sign Out**. The Administrator login screen is displayed.
4. Click **CrestUC**.
5. Click **Sign in**. The Zoom Rooms application will start.

> **NOTE:** If a camera was disconnected from the UC Engine to use a keyboard, disconnect the keyboard and connect the camera to the UC Engine.

Switching from Zoom Rooms to Microsoft Teams Rooms

> **NOTE:** This functionality is supported by the ASUS UC engine only.

Minimum Firmware Requirements

- UC Engine: 1.00.16.715b
- TSW-1060 touch screen: 2.006.0063.001
- TS-1070 touch screen: 1.001.0014.001
- UC-2 Mini Tabletop conference device: 1.0.1.59
- CCS-UC-1-T-V Crestron Mercury Tabletop UC Video Conference System: 1.4906.00015.001
- CCS-UC-1-X Crestron Mercury X Tabletop Conference System: 1.4160.00050.001

Change UC Engine Settings

Use one of the following methods to change the UC Engine settings:

- Crestron Settings App

  > **NOTES:**
  > - Some dual display systems cannot switch from the Zoom Rooms to the Microsoft Teams Rooms application. For example, if the Crestron Settings app does not show the **Change to Teams** button, the system does not support the mode switch function.
  > - If the XiO Cloud service manages the UC Engine, changes made in the Crestron Settings app will revert to the settings established by the XiO Cloud service.
  > - Crestron recommends using a keyboard and mouse connected to the UC Engine when using the Crestron Settings app. If a USB port is not available, temporarily disconnect the system's camera.

  1. Open the Crestron Settings app as described in Crestron Settings App on page 555.
  2. Click **Advanced**.
  3. Click **Change to Teams** and click **Ok** to confirm. The system will reboot.

- XiO Cloud Service

> **NOTE:** Changes made from the XiO Cloud service will override any settings made from the Crestron Settings app.

1. Log in to the XiO Cloud service and select the UC Engine to switch.
2. Click the **Settings** tab.

   XiO Cloud, UC Engine, Settings tab

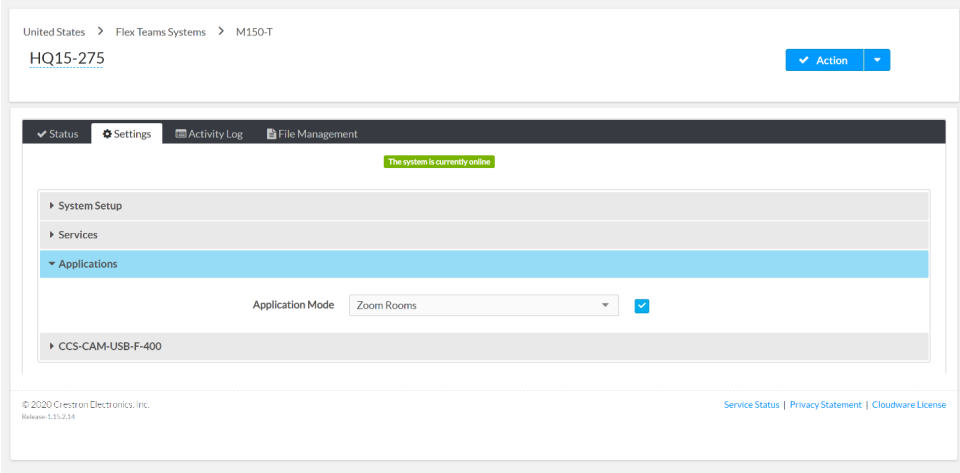

3. Click **Applications**.

> **NOTE:** Some dual display systems cannot switch between the Zoom Rooms and the Microsoft Teams Rooms application. If the **Settings** tab does not contain an **Applications** menu, the system does not support the mode switch function.

4. Click the checkbox next to **Application Mode** to have the XiO Cloud service manage the device
5. Select **Teams Video** from the **Application Mode** drop-down list.

   XiO Cloud, UC Engine, Settings tab, Teams Video selected

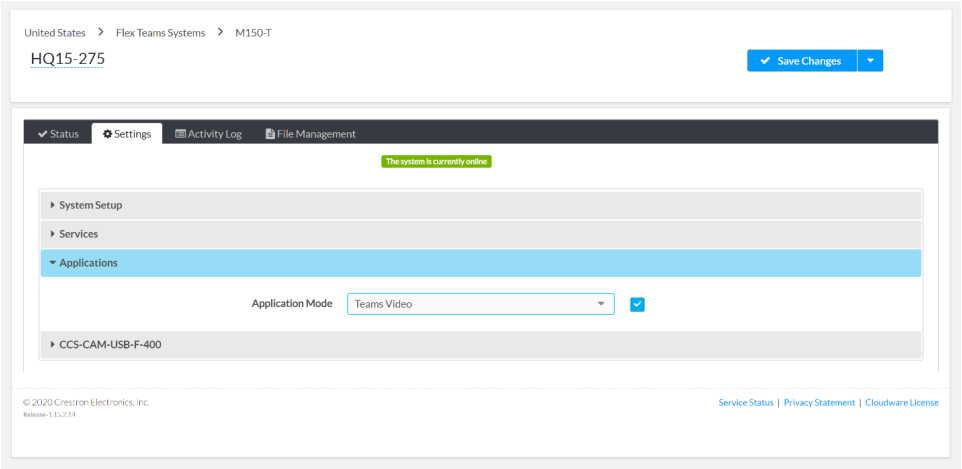

6. Click **Save Changes**. The device will reboot.

Change the Control Device's Application Mode

Set the control device's **Application Mode** to **Teams Video** on:

Crestron Mercury Conference Systems

Use one of the following methods to change the Mercury conference system's application mode.

- Web Browser

> **NOTE:** If the XiO Cloud service manages the Crestron Mercury device, any changes made in the web browser will revert to the settings established by the XiO Cloud service.

1. Use a web browser to display the **DEVICE** screen of the Crestron Mercury device's configuration pages. For more information, refer to the CCS-UC-1 Product Manual (Doc. 7844).

   Web browser, Crestron Mercury Device, Device menu, Applications

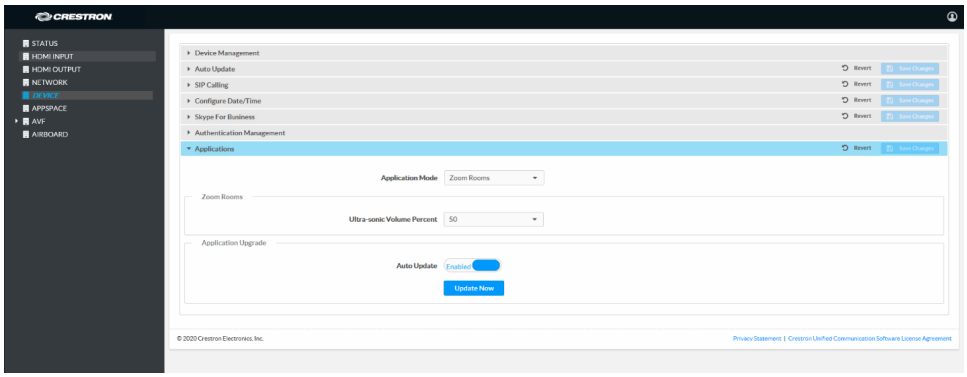

2. Select **Teams Video** from the **Application Mode** drop-down list.

   Web browser, Crestron Mercury Device, Device menu, Applications, Teams Video selected

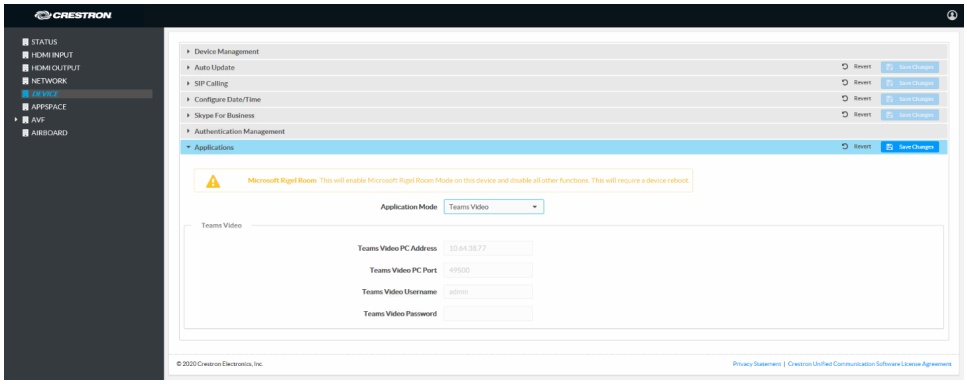

3. Click **Save Changes**. The device will reboot.

4. If the Crestron Mercury device is using a direct Ethernet connection to the UC Engine, continue to Configuration on page 553. Otherwise, log in to the Crestron Mercury device and navigate to **DEVICE** > **Applications**.

   Certain Crestron Flex running Microsoft Teams Rooms can use a direct Ethernet connection between the control device and a USB-to-Ethernet adapter (ADPT USB ENET) connected to the UC Engine to simplify the installation and configuration of the system. This method accelerates deployment, ensures reliability, and provides long-term service while eliminating network setup dependencies related to hardware and security requirements. For more information, refer to the system's quick start guide.

   > **NOTE:** Zoom Rooms systems and some Microsoft Teams Rooms systems do not have the ADPT USB ENET installed. The ADPT-USB-ENET is available for converting a Zoom Rooms system to a Microsoft Teams Rooms system using a direct Ethernet connection between the control device and the UC Engine. The ADPT USB ENET can also be used by those who would like to upgrade an existing Microsoft Teams Rooms system to support a direct Ethernet connection between the control device and the UC Engine.

5. Enter the following information in the appropriate fields.
   - **Teams Video PC Address:** Enter the IP address or hostname of the UC Engine.

     > **NOTE:** The hostname is printed on a label affixed to the UC Engine (mounted on the UC bracket assembly).

   - **Teams Video PC Port:** By default, port number 49500 is used. If a different port number has been configured on the UC Engine, enter that port number instead.
   - **Teams Video Username:** Enter the login username for the UC Engine. (the default is "admin")
   - **Teams Video Password:** Enter the login password for the UC Engine. (the default is "sfb")

   Web browser, Crestron Mercury Device, Device menu, Applications

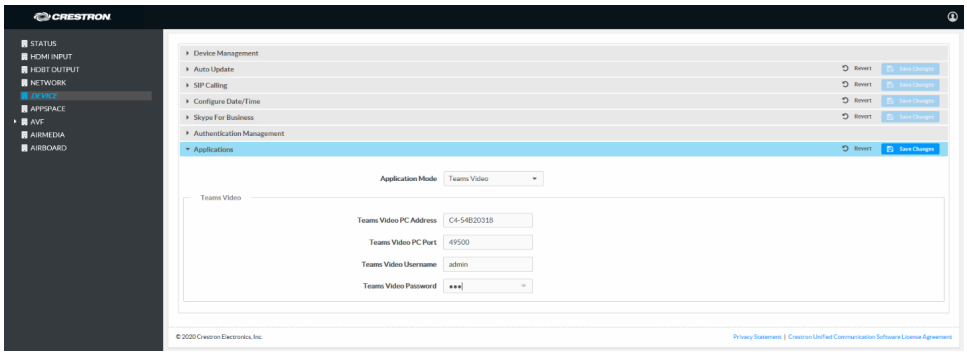

6. Click **Save Changes**.
7. Configure the system as described in Configuration on page 553.

- XiO Cloud Service

> **NOTE:** Changes made from the XiO Cloud service will override any settings made from the device.

1. Log in to the XiO Cloud service and select the Crestron Mercury device to switch.
2. Click the **Settings** tab.
3. Click **Applications**.

XiO Cloud, Crestron Mercury Device, Settings tab

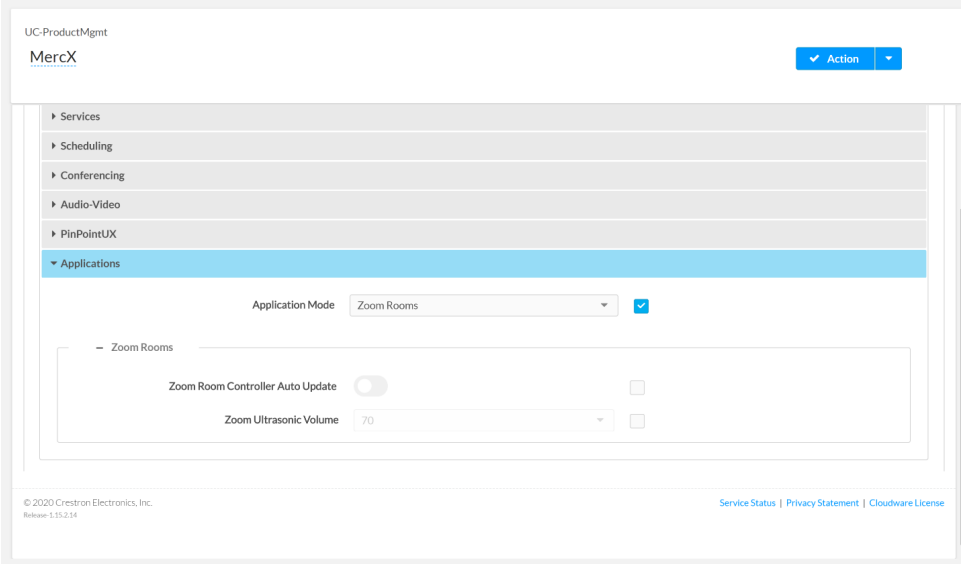

4. Click the checkbox next to **Application Mode** to have the XiO Cloud service manage the device.
5. Select **Teams Video** from the **Application Mode** drop-down list.

XiO Cloud, Crestron Mercury Device, Settings tab, Applications, Teams Video selected

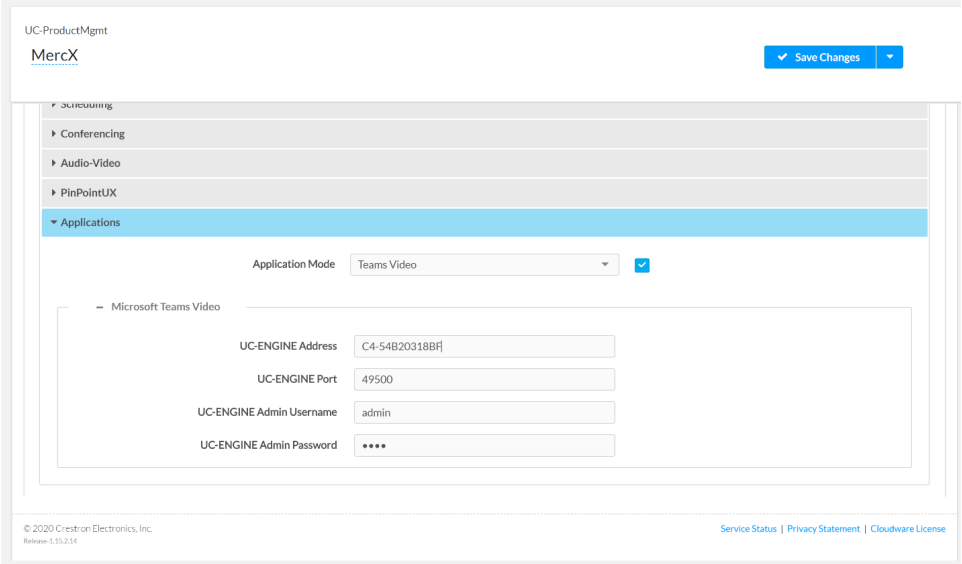

6. Click **Save Changes**. The device will reboot.
7. If the Crestron Mercury device is using a direct Ethernet connection to the UC Engine, continue to step 10. Otherwise, Click **Applications**.
8. Enter the following information in the appropriate fields.
    - **Teams Video PC Address:** Enter the IP address or hostname of the UC Engine.

      > **NOTE:** The hostname is printed on a label affixed to the UC Engine (mounted on the UC bracket assembly).

    - **Teams Video PC Port:** By default, port number 49500 is used. If a different port number has been configured on the UC Engine, enter that port number instead.
    - **Teams Video Username:** Enter the login username for the UC Engine. (the default is "admin")
    - **Teams Video Password:** Enter the login password for the UC Engine. (the default is "sfb")
9. Click **Save Changes**.
10. Configure the system as described in Configuration on page 553.

Touch Screens

Use one of the following methods to change the touch screen's application mode.

- Web Browser

> **NOTE:** If the touch screen is managed by the XiO Cloud service, any changes made in the web browser will revert to the settings established by the XiO Cloud service.

1. Use a web browser to display the Applications settings of the touch screen's configuration pages. For more information, refer to the TSW-570, TSW-770, and TSW-1070 Product Manual (Doc. 8550) or TS-770 and TS-1070 Product Manual (Doc. 8555).

   Web browser, Touch Screen Device, Settings tab, Applications

   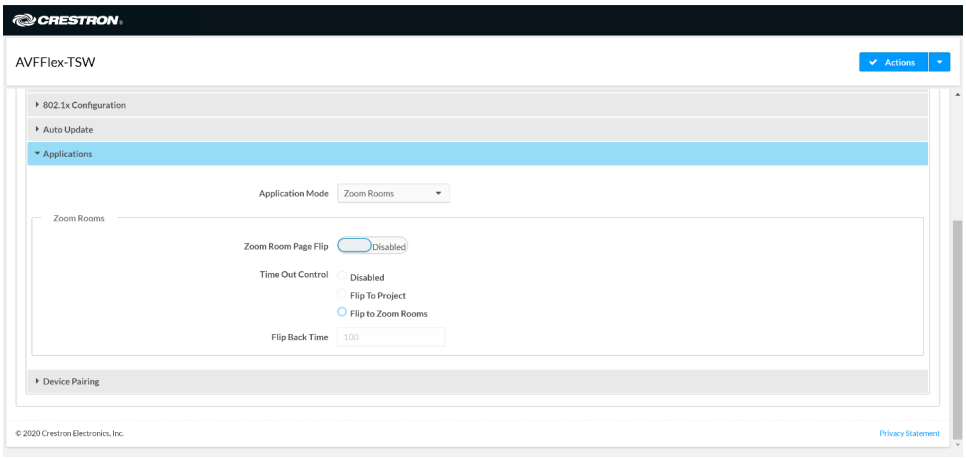

2. Select **Teams Video** from the **Application Mode** drop-down list.

   Web browser, Touch Screen Device, Settings tab, Applications, Teams Video selected

   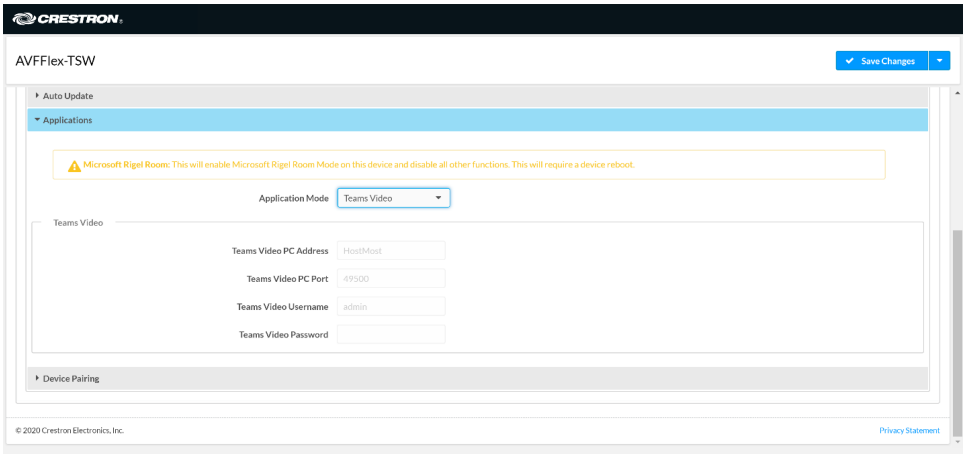

3. Click **Save Changes**. The device will reboot.
4. If the touch screen is directly connected to the UC Engine through a PWE-4803-RU, continue to step 7. Otherwise, log in to the touch screen's configuration pages and navigate to **Settings** > **Applications**.

5. Enter the following information in the appropriate fields.
   - **Teams Video PC Address:** Enter the IP address or hostname of the UC Engine.

     > **NOTE:** The hostname is printed on a label affixed to the UC Engine (mounted on the UC bracket assembly).

   - **Teams Video PC Port:** By default, port number 49500 is used. If a different port number has been configured on the UC Engine, enter that port number instead.
   - **Teams Video Username:** Enter the login username for the UC Engine. (the default is "admin")
   - **Teams Video Password:** Enter the login password for the UC Engine. (T the default is "sfb")

Web browser, Touch Screen Device, Settings tab, Applications

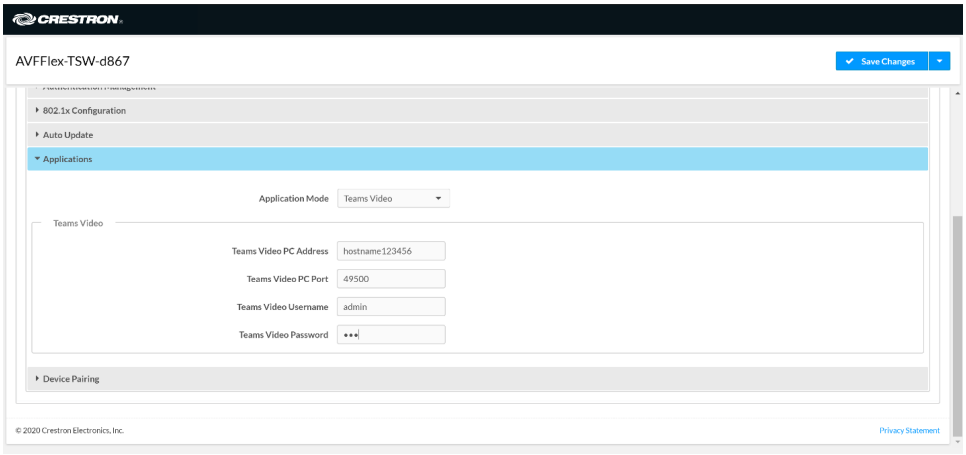

6. Click **Save Changes**.
7. Configure the system as described in Configuration on page 553.

- XiO Cloud Service

> **NOTE:** Changes made from the XiO Cloud service will override any settings made from the device.

1. Log in to the XiO Cloud service and select the touch screen device to switch.
2. Click the **Settings** tab.
3. Click **Applications**.

XiO Cloud, Touch Screen Device, Settings tab

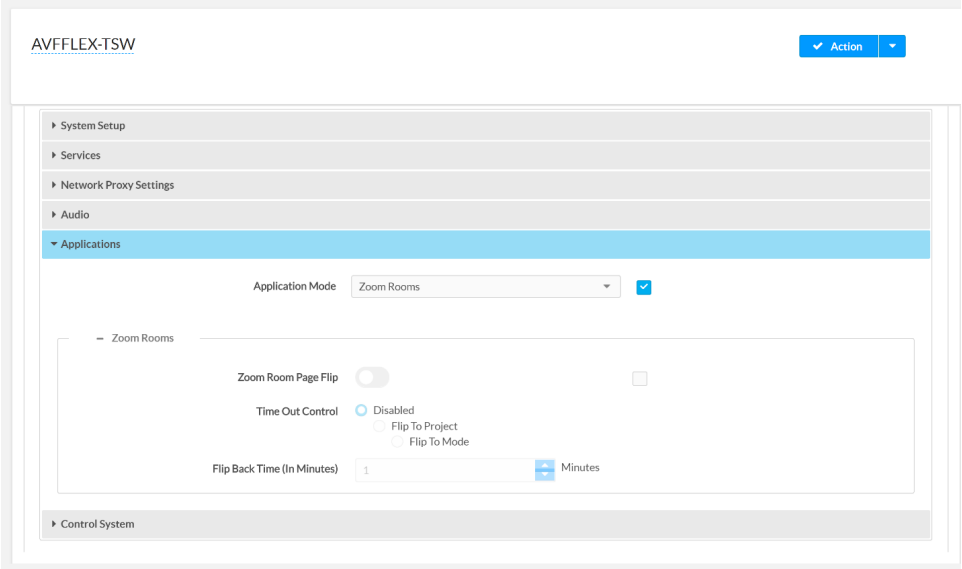

4. Click the checkbox next to **Application Mode** to have the XiO Cloud service manage the device.
5. Select **Teams Video** from the **Application Mode** drop-down list.

XiO Cloud, Touch Screen Device, Settings tab, Teams Video selected

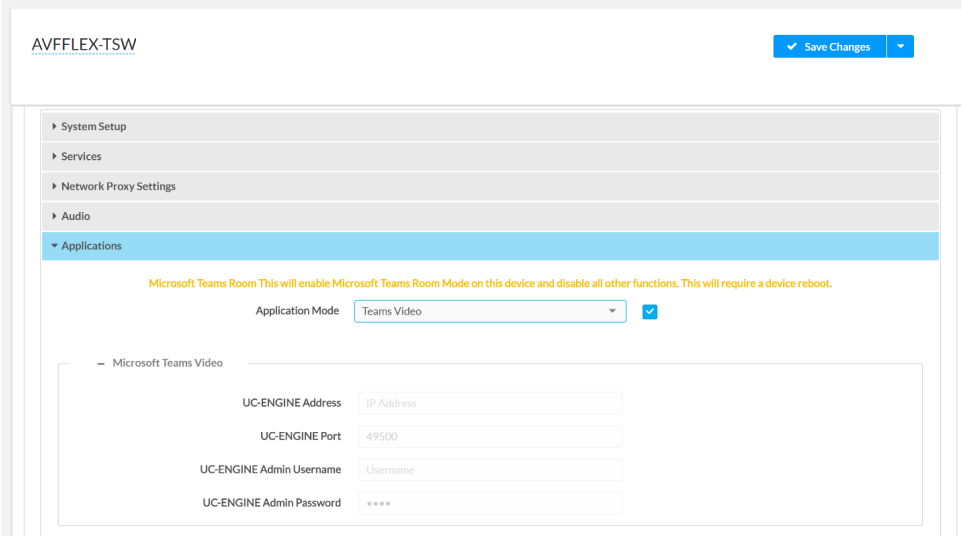

6. Click **Save Changes**. The device will reboot.
7. If the touch screen is directly connected to the UC Engine through a PWE-4803-RU, continue to step 10. Otherwise, log in to the touch screen's configuration pages and navigate to **Settings** > **Applications**.
8. Enter the following information in the appropriate fields.
    - **Teams Video PC Address:** Enter the IP address or hostname of the UC Engine.
    - > **NOTE:** The hostname is printed on a label affixed to the UC Engine (mounted on the UC bracket assembly).
    - **Teams Video PC Port:** By default, port number 49500 is used. If a different port number has been configured on the UC Engine, enter that port number instead.
    - **Teams Video Username:** Enter the login username for the UC Engine. (the default is "admin")
    - **Teams Video Password:** Enter the login password for the UC Engine. (the default is "sfb")
9. Click **Save Changes**. The device will reboot.
10. Configure the system as described in Configuration on page 553.

Custom Controls on a Zoom Rooms System

A Zoom Rooms system with a touch screen can use a touch screen project for customized room control.

> **NOTE:** Zoom Rooms systems with a Crestron Mercury Tabletop UC Video Conference cannot use a touch screen project for customized room control.

Use a web browser to configure the touch screen. For more information, refer to the TSW-570, TSW-770, and TSW-1070 Product Manual (Doc. 8550) or TS-770 and TS-1070 Product Manual (Doc. 8555).

1. On a computer, open a web browser to the IP address of the touch screen.
2. Log in to the device and navigate to **Settings** > **Applications**.

   Web browser, Touch Screen Device, Settings tab, Applications

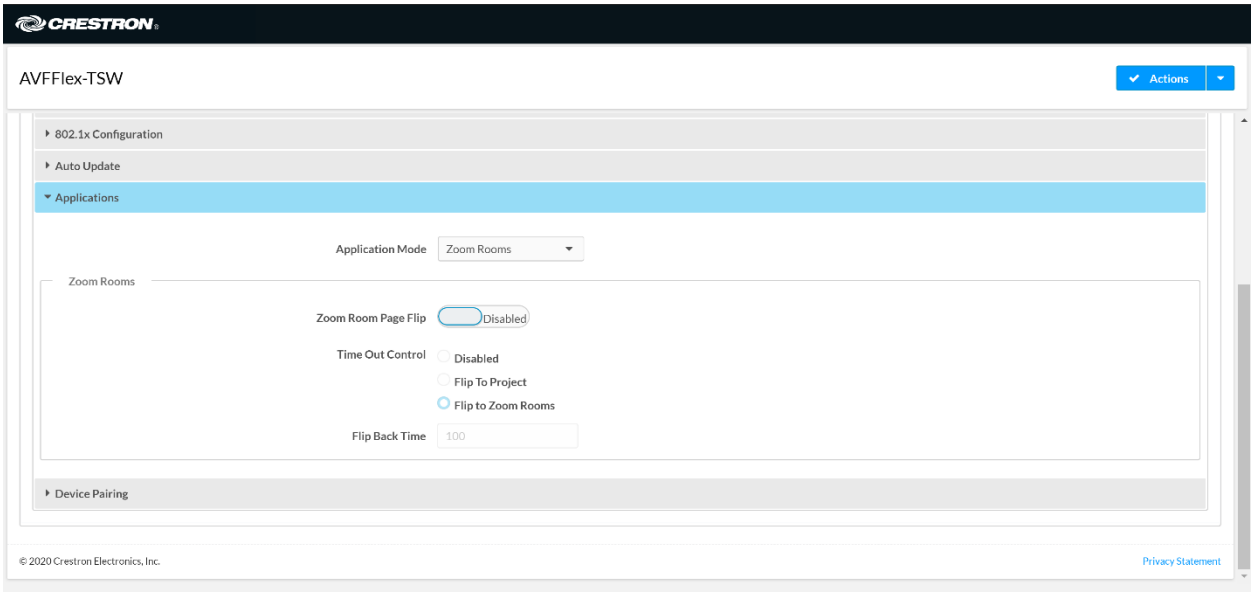

3. Set **Zoom Room Page Flip** to **Enabled**.
4. Set **Time Out Control** to the automatic flip behavior for the Zoom Rooms application.
   - **Disabled:** Automatic flip behavior is disabled.
   - **Flip To Project**: The screen automatically flips to the user project after the **Flip Back Time** duration elapses. Press the home button (second hard key from top right) on the touch screen to flip back to the Zoom Rooms application.
   - **Flip To Mode:** The screen automatically flips to the Zoom Rooms application after the time-out duration elapses. Press the home button on the touch screen to flip back to the user project.

5. Set **Flip Back Time** to a time (1 to 100 minutes) before the automatic flip behavior occurs.

Web browser, Touch Screen Device, Settings tab, Applications, Zoom Rooms selected

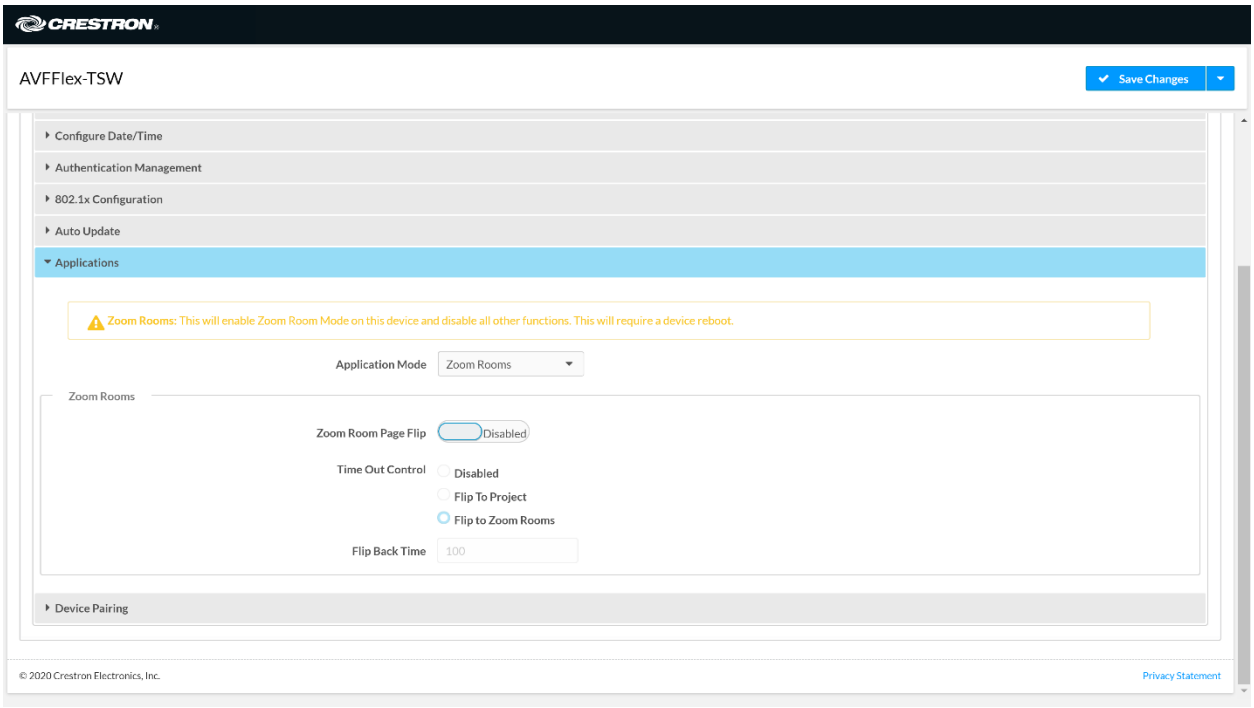

6. Click **Save Changes**. The device will reboot.
7. Load the touch screen project to the touch screen as described in the TSW-570, TSW-770, and TSW-1070 Product Manual (Doc. 8550) or TS-770 and TS-1070 Product Manual (Doc. 8555).

Crestron Control for Zoom Rooms Software

Provides a program that can be loaded to a Crestron control system to enable custom programming and control for the Zoom Rooms controller application. Compatible with all Crestron Flex for Zoom Rooms solutions. For more information, visit Crestron Control for Zoom Rooms Software.

Operation

For instructions on using a Zoom Rooms solution, visit Getting Started with a Zoom Rooms Solution.

Open-Platform Solutions

Crestron Flex Open-platform solutions provide a complete conferencing and collaboration solution for open-platform UC applications. For more details, refer to Crestron Flex BYOD Solutions.

Select the following sections to know about the product features, specifications, and installation for all M50/MX50 and M70/MX70 series Open-platform solutions.

- Features
- Specifications and Dimension Drawings
- Quick Start Guides

Features

Refer to the following sections for more information on the features provided by various Open-platform BYOD conference rooms solutions.

UC-M50-UA Features

The Crestron Flex UC-M50-UA provides an audio conference room solution for open-platform UC applications.



Included Components

- CCS-UC-1
- CBL-USB-A-BMICRO-6
- PW-2420RU

To view the specifications and dimensions of the included components of the selected kit, refer to Specifications and Dimension Drawings.

Key Features

- Tabletop audio conferencing solution for any UC platform
- Simple, intuitive touch screen UX provides a consistent user experience in every room
- Network management and provisioning and system alerts through the XiO Cloud® service
- Easy to specify and install — no custom design, programming, or software installation required
- Enterprise-grade security — connects and communicates securely over any enterprise or SMB network
- Premium-level support with Crestron Flex Care (optional)

Intuitive User Interface with Impressive Audio

With a large 7 in. HD color touch screen and an integrated AEC-enabled USB speakerphone that affords full-duplex wideband audio performance, the Crestron Flex Tabletop Conference device provides a superior conferencing and collaboration experience for meeting rooms, huddle spaces, and executive offices.

Voice Calling & Audio Conferencing

The tabletop conference device is a full-featured VoIP conferencing speakerphone that's fully compatible with major SIP-compliant phone systems. Its advanced design provides highly intelligible, full-duplex communication for every participant around a conference table. Dialing and answering calls is easy and intuitive using the large HD color touch screen. Corporate directory access (LDAP) enables one-touch dialing from the customer's centrally managed directory.

The conference device can pair with a mobile phone using Bluetooth® connectivity to make or join phone calls, or to use as a speaker and/or microphone for an application running on a smartphone. When used for calls, controls for the Bluetooth enabled phone appear on the touch screen, enabling instant connectivity with the press of a button.

The conference device functions like any USB Audio class device, allowing you to connect a laptop computer via USB to improve audio performance for any softphone, multimedia, or audio conferencing application running on the laptop.

Enterprise-Grade Security

Crestron Flex is an enterprise-grade solution that is ideally equipped for mass deployment throughout any sized corporate, university, medical, military, or government facility. Its advanced security features ensure privacy, reliability, and compliance with your organization's IT policies.

Easy Provisioning and Device Management

The XiO Cloud service is an IoT cloud based provisioning service (available separately) that enables installers and IT managers to deploy and manage thousands of devices easily. The XiO Cloud service allows for system alerts, network management and provisioning, and the pairing of a control device to the system's UC Engine. System updates are controlled by Windows software update.

Visit www.crestron.com/xiocloud for additional information.

Premium-Level Support

Crestron Flex Care is an optional subscription service that can be renewed annually for up to 5 years from the ship date. It includes 24/7 live remote technical support, an extended fiveyear warranty on Crestron® hardware, expedited advance replacements, and a discounted rate for on-site support.

Visit www.crestron.com/flexcare for detailed terms and conditions and additional information.

UC-M50-U Features

The Crestron Flex UC-M50-U provides a complete conferencing and collaboration solution for open-platform UC applications. It supports a single video display.



Included Components

- CCS-UC-1-AV
- CCS-CAM-USB-F-400
- UC-CAM-WMK
- STIRP
- PW-2420RU
- Cables

To view the specifications and dimensions of the included components of the selected kit, refer to Specifications and Dimension Drawings.

Key Features

- Tabletop audio and video conferencing solution
- Simple, intuitive touch screen UX provides a consistent user experience in every room
- Present, call, conference, and collaborate using your own UC conference software (BYOD)
- Network management and provisioning and system alerts through the XiO Cloud® service
- Easy to specify and install — no custom design, programming, or software installation required
- Enterprise-grade security — connects and communicates securely over any enterprise or SMB network
- Premium-level support with Crestron Flex Care (optional)

Intuitive User Interface with Impressive Audio

With a large 7 in. HD color touch screen and an integrated AEC-enabled USB speakerphone that affords full-duplex wideband audio performance, the Crestron Flex Tabletop Conference device provides a superior conferencing and collaboration experience for meeting rooms, huddle spaces, and executive offices.

High-Definition Video Conferencing

The included collaboration camera (CCS-CAM-USB-F-400) features an ultra wide-angle 150° diagonal field of view to capture an entire conference room in Full HD 1080p video resolution. High precision aspherical optics, 12 MP CMOS sensor, and advanced video processing ensure a clear video image free from light or noise artifacts. Genius Framing digital autozoom detects the people in the room and frames them for an optimal view.

Voice Calling & Audio Conferencing

The tabletop conference device is a full-featured VoIP conferencing speakerphone that's fully compatible with major SIP-compliant phone systems. Its advanced design provides highly intelligible, full-duplex communication for every participant around a conference table. Dialing and answering calls is easy and intuitive using the large HD color touch screen. Corporate directory access (LDAP) enables one-touch dialing from the customer's centrally managed directory.

The conference device can pair with a mobile phone using Bluetooth® connectivity to make or join phone calls, or to use as a speaker and/or microphone for an application running on a smartphone. When used for calls, controls for the Bluetooth enabled phone appear on the touch screen, enabling instant connectivity with the press of a button.

The conference device functions like any USB Audio class device, allowing you to connect a laptop computer via USB to improve audio performance for any softphone, multimedia, or audio conferencing application running on the laptop.

BYOD Multimedia Presentation

Connect a display device to the CCS-UC-1-AV's HDMI® output port to enable high-definition video presentation from all types of BYOD sources.

Connect an AV source to the HDMI input port to present full-motion HD video content on the room display. Sources with DisplayPort™ or USB Type-C® outputs can also be connected using an optional Crestron video cable system (CBL-MULTI-6 or CBL-MULTI-12, sold separately).

Use the built-in AirMedia® technology for wireless presentation of content from a laptop, smartphone, or tablet device via the room's Wi-Fi® wireless network.

Visit www.crestron.com/airmedia for more information.[1]

Video Conferencing & Web Collaboration

Videoconferencing is enabled by connecting a laptop running a web conferencing or UC application such as Microsoft Teams Rooms, Skype® for Business, Cisco Webex®, GotoMeeting®, Slack®, BlueJeans, or Zoom Rooms. All participants are provided with enhanced bidirectional audio along with a high-definition view of the whole room.

Connect the laptop's HDMI output to allow the whole room to view far-end content and camera images on the main room display. Laptops with DisplayPort or USB Type-C outputs can also be connected using an optional Crestron video cable system (CBL-MULTI-6 or CBL-MULTI-12, sold separately).

Enterprise-Grade Security

Crestron Flex is an enterprise-grade solution that is ideally equipped for mass deployment throughout any sized corporate, university, medical, military, or government facility. Its advanced security features ensure privacy, reliability, and compliance with your organization's IT policies.

Easy Provisioning and Device Management

The XiO Cloud service is an IoT cloud based provisioning service (available separately) that enables installers and IT managers to deploy and manage thousands of devices easily. The XiO Cloud service allows for system alerts, network management and provisioning, and the pairing of a control device to the system's UC Engine. System updates are controlled by Windows software update.

Visit www.crestron.com/xiocloud for additional information.

Premium-Level Support

Crestron Flex Care is an optional subscription service that can be renewed annually for up to 5 years from the ship date. It includes 24/7 live remote technical support, an extended fiveyear warranty on Crestron® hardware, expedited advance replacements, and a discounted rate for on-site support.

Visit www.crestron.com/flexcare for detailed terms and conditions and additional information.

Note:

1. AirMedia wireless presentation requires a wired network connection between the Crestron Mercury® console and an external Wi-Fi wireless access point (not included). Laptops may alternately connect to AirMedia using a wired Ethernet connection. Full-motion video performance is dependent upon the performance of the network and the sending device. Computer client software and mobile device apps are available for download at www.crestron.com/airmedia.

UC-MX50-U Features

The Crestron Flex UC-MX50-U provides a complete conferencing and collaboration solution for open-platform UC applications. It supports a single video display.



Included Components

- CCS-UC-1-X
- CCS-CAM-USB-F-400
- UC-CAM-WMK
- HD-RX-USB-2000-C
- STIRP
- Cables

To view the specifications and dimensions of the included components of the selected kit, refer to Specifications and Dimension Drawings.

Key Features

- Tabletop audio and video conferencing solution
- Simple, intuitive touch screen UX provides a consistent user experience in every room
- Present, call, conference, and collaborate using your own UC conference software (BYOD)
- Network management and provisioning and system alerts through the XiO Cloud® service
- Easy to specify and install — no custom design, programming, or software installation required
- Enterprise-grade security — connects and communicates securely over any enterprise or SMB network
- Premium-level support with Crestron Flex Care (optional)

Intuitive User Interface with Impressive Audio

With a large 7 in. HD color touch screen and an integrated AEC-enabled USB speakerphone that affords full-duplex wideband audio performance, the Crestron Flex Tabletop Conference device provides a superior conferencing and collaboration experience for meeting rooms, huddle spaces, and executive offices.

High-Definition Video Conferencing

The included collaboration camera (CCS-CAM-USB-F-400) features an ultra wide-angle 150° diagonal field of view to capture an entire conference room in Full HD 1080p video resolution. High precision aspherical optics, 12 MP CMOS sensor, and advanced video processing ensure a clear video image free from light or noise artifacts. Genius Framing digital autozoom detects the people in the room and frames them for an optimal view.

Voice Calling & Audio Conferencing

The conference device provides full-duplex conferencing speakerphone capabilities and is compatible with major SIP-compliant phone systems. Dialing and answering calls is easy and intuitive using the large HD color touch screen. Corporate directory access (LDAP) enables one-touch dialing from the customer's centrally-managed directory. Native Skype® for Business VoIP support enables one-touch join capability for scheduled Skype meetings (audio only), or you can place a Skype call using the directory or dial pad.

The conference device can pair with a mobile phone using Bluetooth® connectivity to make or join phone calls, or to use as a speaker and/or microphone for an application running on a smartphone. When used for calls, controls for the Bluetooth-enabled phone appear on the touch screen, enabling instant connectivity with the press of a button.

The conference device functions like any USB Audio Class device, allowing you to connect a laptop computer via USB to improve audio performance for any softphone, multimedia, or audio conferencing application running on the laptop.

BYOD Multimedia Presentation

Connect a display device to the HD-RX-USB-2000-C's HDMI output port to enable high-definition video presentation from all types of BYOD sources.

Connect an AV source to the CCS-UC-1-X's HDMI input port to present full-motion HD video content on the room display. Sources with DisplayPort™ or USB Type-C® outputs can also be connected using an optional Crestron video cable system (CBL-MULTI-6 or CBL-MULTI-12, sold separately).

Use the built-in AirMedia® technology for wireless presentation of content from a laptop, smartphone, or tablet device via the room's Wi-Fi® wireless network.

Visit www.crestron.com/airmedia for more information.[1]

Video Conferencing & Web Collaboration

Videoconferencing is enabled by connecting a laptop running a web conferencing or UC application such as Microsoft Teams Rooms, Skype® for Business, Cisco Webex®, GotoMeeting®, Slack®, BlueJeans, or Zoom Rooms. All participants are provided with enhanced bidirectional audio along with a high-definition view of the whole room.

Connect the laptop's HDMI output to allow the whole room to view far-end content and camera images on the main room display. Laptops with DisplayPort or USB Type-C outputs can also be connected using an optional Crestron video cable system (CBL-MULTI-6 or CBL-MULTI-12, sold separately).

HDMI over CATx Receiver

The HDMI over CATx Receiver (HD-RX-USB-2000-C) receives uncompressed HDMI, CEC, RS-232, Ethernet, and IR signals sent from a Crestron Flex tabletop conference device (CCS-UC-1-X) through a single CAT type[2] cable. Signals are broken out to relevant output ports for connection to the front-of-room display.

Enterprise-Grade Security

Crestron Flex is an enterprise-grade solution that is ideally equipped for mass deployment throughout any sized corporate, university, medical, military, or government facility. Its advanced security features ensure privacy, reliability, and compliance with your organization's IT policies.

Easy Provisioning and Device Management

The XiO Cloud service is an IoT cloud based provisioning service (available separately) that enables installers and IT managers to deploy and manage thousands of devices easily. The XiO Cloud service allows for system alerts, network management and provisioning, and the pairing of a control device to the system's UC Engine. System updates are controlled by Windows software update.

Visit www.crestron.com/xiocloud for additional information.

Premium-Level Support

Crestron Flex Care is an optional subscription service that can be renewed annually for up to 5 years from the ship date. It includes 24/7 live remote technical support, an extended fiveyear warranty on Crestron® hardware, expedited advance replacements, and a discounted rate for on-site support.

Visit www.crestron.com/flexcare for detailed terms and conditions and additional information.

Notes:

1. AirMedia wireless presentation requires a wired network connection between the Crestron Mercury® console and an external Wi-Fi wireless access point (not included). Laptops may alternately connect to AirMedia using a wired Ethernet connection. Full-motion video performance is dependent upon the performance of the network and the sending device. Computer client software and mobile device apps are available for download at www.crestron.com/airmedia.
2. CAT5e or better.

UC-M70-UA Features

The Crestron Flex UC-M70-UA provides an audio conference room solution for open-platform UC applications.



Included Components

- CCS-UC-1
- CCS-UCA-MIC
- CBL-USB-A-BMICRO-6
- PW-2420RU

To view the specifications and dimensions of the included components of the selected kit, refer to Specifications and Dimension Drawings.

Key Features

- Tabletop audio conferencing solution for any UC platform
- Simple, intuitive touch screen UX provides a consistent user experience in every room
- Network management and provisioning and system alerts through the XiO Cloud® service
- Easy to specify and install — no custom design, programming, or software installation required
- Enterprise-grade security — connects and communicates securely over any enterprise or SMB network
- Premium-level support with Crestron Flex Care (optional)

Intuitive User Interface with Impressive Audio

With a large 7 in. HD color touch screen and an integrated AEC-enabled USB speakerphone that affords full-duplex wideband audio performance, the Crestron Flex Tabletop Conference device provides a superior conferencing and collaboration experience for meeting rooms, huddle spaces, and executive offices.

Voice Calling & Audio Conferencing

The tabletop conference device is a full-featured VoIP conferencing speakerphone that's fully compatible with major SIP-compliant phone systems. Its advanced design provides highly intelligible, full-duplex communication for every participant around a conference table. Dialing and answering calls is easy and intuitive using the large HD color touch screen. Corporate directory access (LDAP) enables one-touch dialing from the customer's centrally managed directory.

The conference device can pair with a mobile phone using Bluetooth® connectivity to make or join phone calls, or to use as a speaker and/or microphone for an application running on a smartphone. When used for calls, controls for the Bluetooth enabled phone appear on the touch screen, enabling instant connectivity with the press of a button.

The conference device functions like any USB Audio class device, allowing you to connect a laptop computer via USB to improve audio performance for any softphone, multimedia, or audio conferencing application running on the laptop.

Enterprise-Grade Security

Crestron Flex is an enterprise-grade solution that is ideally equipped for mass deployment throughout any sized corporate, university, medical, military, or government facility. Its advanced security features ensure privacy, reliability, and compliance with your organization's IT policies.

Easy Provisioning and Device Management

The XiO Cloud service is an IoT cloud based provisioning service (available separately) that enables installers and IT managers to deploy and manage thousands of devices easily. The XiO Cloud service allows for system alerts, network management and provisioning, and the pairing of a control device to the system's UC Engine. System updates are controlled by Windows software update.

Visit www.crestron.com/xiocloud for additional information.

Premium-Level Support

Crestron Flex Care is an optional subscription service that can be renewed annually for up to 5 years from the ship date. It includes 24/7 live remote technical support, an extended fiveyear warranty on Crestron® hardware, expedited advance replacements, and a discounted rate for on-site support.

Visit www.crestron.com/flexcare for detailed terms and conditions and additional information.

UC-M70-U Features

The Crestron Flex UC-M70-U provides a complete conferencing and collaboration solution for open-platform UC applications. It supports a single video display.



Included Components

- CCS-UC-1-AV
- UC-CAM-L1
- CCS-UCA-MIC
- STIRP
- PW-2420RU
- Cables

To view the specifications and dimensions of the included components of the selected kit, refer to Specifications and Dimension Drawings.

Key Features

- Tabletop audio and video conferencing solution
- Simple, intuitive touch screen UX provides a consistent user experience in every room
- Present, call, conference, and collaborate using your own UC conference software (BYOD)
- Network management and provisioning and system alerts through the XiO Cloud® service
- Easy to specify and install — no custom design, programming, or software installation required
- Enterprise-grade security — connects and communicates securely over any enterprise or SMB network
- Premium-level support with Crestron Flex Care (optional)

Intuitive User Interface with Impressive Audio

With a large 7 in. HD color touch screen and an integrated AEC-enabled USB speakerphone that affords full-duplex wideband audio performance, the Crestron Flex Tabletop Conference device provides a superior conferencing and collaboration experience for meeting rooms, huddle spaces, and executive offices.

High-Definition Video Conferencing

The included AI collaboration camera (UC-CAM-L1)[1] features a wide-angle 103° diagonal field of view to capture an entire conference room in Full HD 1080p video resolution. High precision aspherical optics, 20.30 MP CMOS sensor, and advanced video processing ensure a clear video image free from light or noise artifacts. Genius Framing digital autozoom intelligently detects the people in the room and frames them for an optimal view.

Voice Calling & Audio Conferencing

The tabletop conference device is a full-featured VoIP conferencing speakerphone that's fully compatible with major SIP-compliant phone systems. Its advanced design provides highly intelligible, full-duplex communication for every participant around a conference table. Dialing and answering calls is easy and intuitive using the large HD color touch screen. Corporate directory access (LDAP) enables one-touch dialing from the customer's centrally managed directory.

The conference device can pair with a mobile phone using Bluetooth® connectivity to make or join phone calls, or to use as a speaker and/or microphone for an application running on a smartphone. When used for calls, controls for the Bluetooth enabled phone appear on the touch screen, enabling instant connectivity with the press of a button.

The conference device functions like any USB Audio class device, allowing you to connect a laptop computer via USB to improve audio performance for any softphone, multimedia, or audio conferencing application running on the laptop.

BYOD Multimedia Presentation

Connect a display device to the CCS-UC-1-AV's HDMI® output port to enable high-definition video presentation from all types of BYOD sources.

Connect an AV source to the HDMI input port to present full-motion HD video content on the room display. Sources with DisplayPort™ or USB Type-C® outputs can also be connected using an optional Crestron video cable system (CBL-MULTI-6 or CBL-MULTI-12, sold separately).

Use the built-in AirMedia® technology for wireless presentation of content from a laptop, smartphone, or tablet device via the room's Wi-Fi® wireless network.

Visit www.crestron.com/airmedia for more information.[2]

Video Conferencing & Web Collaboration

Videoconferencing is enabled by connecting a laptop running a web conferencing or UC application such as Microsoft Teams Rooms, Skype® for Business, Cisco Webex®, GotoMeeting®, Slack®, BlueJeans, or Zoom Rooms. All participants are provided with enhanced bidirectional audio along with a high-definition view of the whole room.

Connect the laptop's HDMI output to allow the whole room to view far-end content and camera images on the main room display. Laptops with DisplayPort or USB Type-C outputs can also be connected using an optional Crestron video cable system (CBL-MULTI-6 or CBL-MULTI-12, sold separately).

Enterprise-Grade Security

Crestron Flex is an enterprise-grade solution that is ideally equipped for mass deployment throughout any sized corporate, university, medical, military, or government facility. Its advanced security features ensure privacy, reliability, and compliance with your organization's IT policies.

Easy Provisioning and Device Management

The XiO Cloud service is an IoT cloud based provisioning service (available separately) that enables installers and IT managers to deploy and manage thousands of devices easily. The XiO Cloud service allows for system alerts, network management and provisioning, and the pairing of a control device to the system's UC Engine. System updates are controlled by Windows software update.

Visit www.crestron.com/xiocloud for additional information.

Premium-Level Support

Crestron Flex Care is an optional subscription service that can be renewed annually for up to 5 years from the ship date. It includes 24/7 live remote technical support, an extended fiveyear warranty on Crestron® hardware, expedited advance replacements, and a discounted rate for on-site support.

Visit www.crestron.com/flexcare for detailed terms and conditions and additional information.

Notes:

1. The UC-CAM-L1 with network adapter requires driver installation on the connected laptop. A USB plug-and-play adapter, UC-CAMA-ADPT-ENET-USB, can be purchased separately to avoid driver installation.
2. AirMedia wireless presentation requires a wired network connection between the Crestron Mercury® console and an external Wi-Fi wireless access point (not included). Laptops may alternately connect to AirMedia using a wired Ethernet connection. Full-motion video performance is dependent upon the performance of the network and the sending device. Computer client software and mobile device apps are available for download at www.crestron.com/airmedia.

UC-MX70-U Features

The Crestron Flex UC-MX70-U provides a complete conferencing and collaboration solution for open-platform UC applications. It supports a single video display.



Included Components

- CCS-UC-1-X
- UC-CAM-L1
- CCS-UCA-MIC
- HD-RX-USB-2000-C
- STIRP
- Cables

To view the specifications and dimensions of the included components of the selected kit, refer to Specifications and Dimension Drawings.

Key Features

- Tabletop audio and video conferencing solution
- Simple, intuitive touch screen UX provides a consistent user experience in every room
- Present, call, conference, and collaborate using your own UC conference software (BYOD)
- Network management and provisioning and system alerts through the XiO Cloud® service
- Easy to specify and install — no custom design, programming, or software installation required
- Enterprise-grade security — connects and communicates securely over any enterprise or SMB network

- Premium-level support with Crestron Flex Care (optional)

Intuitive User Interface with Impressive Audio

With a large 7 in. HD color touch screen and an integrated AEC-enabled USB speakerphone that affords full-duplex wideband audio performance, the Crestron Flex Tabletop Conference device provides a superior conferencing and collaboration experience for meeting rooms, huddle spaces, and executive offices.

High-Definition Video Conferencing

The included AI collaboration camera (UC-CAM-L1)[1] features a wide-angle 103° diagonal field of view to capture an entire conference room in Full HD 1080p video resolution. High precision aspherical optics, 20.30 MP CMOS sensor, and advanced video processing ensure a clear video image free from light or noise artifacts. Genius Framing digital autozoom intelligently detects the people in the room and frames them for an optimal view.

Voice Calling & Audio Conferencing

The conference device provides full-duplex conferencing speakerphone capabilities and is compatible with major SIP-compliant phone systems. Dialing and answering calls is easy and intuitive using the large HD color touch screen. Corporate directory access (LDAP) enables one-touch dialing from the customer's centrally-managed directory. Native Skype® for Business VoIP support enables one-touch join capability for scheduled Skype meetings (audio only), or you can place a Skype call using the directory or dial pad.

The conference device can pair with a mobile phone using Bluetooth® connectivity to make or join phone calls, or to use as a speaker and/or microphone for an application running on a smartphone. When used for calls, controls for the Bluetooth-enabled phone appear on the touch screen, enabling instant connectivity with the press of a button.

The conference device functions like any USB Audio Class device, allowing you to connect a laptop computer via USB to improve audio performance for any softphone, multimedia, or audio conferencing application running on the laptop.

BYOD Multimedia Presentation

Connect a display device to the HD-RX-USB-2000-C's HDMI output port to enable high-definition video presentation from all types of BYOD sources.

Connect an AV source to the CCS-UC-1-X's HDMI input port to present full-motion HD video content on the room display. Sources with DisplayPort™ or USB Type-C® outputs can also be connected using an optional Crestron video cable system (CBL-MULTI-6 or CBL-MULTI-12, sold separately).

Use the built-in AirMedia® technology for wireless presentation of content from a laptop, smartphone, or tablet device via the room's Wi-Fi® wireless network.

Visit www.crestron.com/airmedia for more information.[2]

Video Conferencing & Web Collaboration

Videoconferencing is enabled by connecting a laptop running a web conferencing or UC application such as Microsoft Teams Rooms, Skype® for Business, Cisco Webex®, GotoMeeting®, Slack®, BlueJeans, or Zoom Rooms. All participants are provided with enhanced bidirectional audio along with a high-definition view of the whole room.

Connect the laptop's HDMI output to allow the whole room to view far-end content and camera images on the main room display. Laptops with DisplayPort or USB Type-C outputs can also be connected using an optional Crestron video cable system (CBL-MULTI-6 or CBL-MULTI-12, sold separately).

HDMI over CATx Receiver

The HDMI over CATx Receiver (HD-RX-USB-2000-C) receives uncompressed HDMI, CEC, RS-232, Ethernet, and IR signals sent from a Crestron Flex tabletop conference device (CCS-UC-1-X) through a single CAT type[3] cable. Signals are broken out to relevant output ports for connection to the front-of-room display.

Enterprise-Grade Security

Crestron Flex is an enterprise-grade solution that is ideally equipped for mass deployment throughout any sized corporate, university, medical, military, or government facility. Its advanced security features ensure privacy, reliability, and compliance with your organization's IT policies.

Easy Provisioning and Device Management

The XiO Cloud service is an IoT cloud based provisioning service (available separately) that enables installers and IT managers to deploy and manage thousands of devices easily. The XiO Cloud service allows for system alerts, network management and provisioning, and the pairing of a control device to the system's UC Engine. System updates are controlled by Windows software update.

Visit www.crestron.com/xiocloud for additional information.

Premium-Level Support

Crestron Flex Care is an optional subscription service that can be renewed annually for up to 5 years from the ship date. It includes 24/7 live remote technical support, an extended fiveyear warranty on Crestron® hardware, expedited advance replacements, and a discounted rate for on-site support.

Visit www.crestron.com/flexcare for detailed terms and conditions and additional information.

Notes:

1. The UC-CAM-L1 with network adapter requires driver installation on the connected laptop. A USB plug-and-play adapter, UC-CAMA-ADPT-ENET-USB, can be purchased separately to avoid driver installation.
2. AirMedia wireless presentation requires a wired network connection between the Crestron Mercury® console and an external Wi-Fi wireless access point (not included). Laptops may alternately connect to AirMedia using a wired Ethernet connection. Full-motion video performance is dependent upon the performance of the network and the sending device. Computer client software and mobile device apps are available for download at www.crestron.com/airmedia.
3. CAT5e or better.

Specifications and Dimension Drawings

Refer to the following sections for more information regarding the specifications and dimensions of the following devices.

Tabletop Conferencing Device Specifications

Device name: CCS-UC-1 / CCS-UC-1-AV / CCS-UC-1-X

Touch Screen	7 in. (178 mm) diagonal capacitive multi-touch TFT active matrix color LCD, 1280 x 800 pixels
Mic Mute Symbol and Light Bar	(2) Capacitive buttons with bi-color LEDs, either button toggles between mute and unmute
AEC	Limes Audio TrueVoice® acoustic echo cancellation, automatic mic mixing, automatic gain control, and dynamic noise reduction, full-duplex IEEE 1329 Type 1 compliant
Speaker	Full range speaker; Amplifier Power: 11 W; 95 dB SPL at 0.5 m maximum output; Frequency Response: 90 Hz to 22 kHz
Microphones	360° quad mic array; Pickup Range (typical): 20 ft (6 m)
Extension Microphones	Supports two mic pods, model CCS-UCA-MIC (sold separately)
Occupancy Sensor	6 ft (1.83 m) PIR range in front of touch screen
Ethernet (CCS-UC-1, CCS-UC-1-AV)	Dual-port 100 Mbps, auto-switching, auto-negotiating, auto-discovery, full/half duplex, DHCP, TCP/IP, UDP/IP, CIP, SSL, TLS, SSH, SFTP (SSH File Transfer Protocol), SRTP, IEEE 802.1X, Active Directory® authentication, LDAP, Kerberos, digest access authentication, password login, HTTPS secure provisioning, XiO Cloud client, primary port is IEEE 802.3at Type 2 PoE+ compliant
Ethernet (CCS-UC-1-X)	100 Mbps, auto-switching, autonegotiating, autodiscovery, full/half duplex, DHCP, TCP/IP, UDP/IP, CIP, SSL, TLS, SSH, SFTP (SSH File Transfer Protocol), SRTP, IEEE 802.1X, Active Directory authentication, digest access authentication, password login, XiO Cloud service, Microsoft Intune® client
USB	USB 2.0 micro Type B device port, supports UAC for audio interface to UC Engine (cable included)
Power Options (CCS-UC-1, CCS-UC-1-AV)	PoE+: IEEE 802.3at Type 2, Class 4 (25.5 W) PoE+ Powered Device **NOTE:** If the additional mic pod (CCS-UCA-MIC) is used, PoE+ cannot be used to power the device. 24VDC: 24VDC via external 100-240VAC, 50/60 Hz power pack, model PW-2420RU
Power (CCS-UC-1-X)	24VDC via external 100-240VAC, 50/60 Hz power pack, model PW-2420RU **NOTE:** The CCS-UC-1-X cannot be powered by Power over Ethernet or PoE+.
Dimensions	Height: 4.11 in. (104 mm) Width: 8.92 in. (227 mm) Depth: 12.74 in. (324 mm)
Weight	5.5 lb (2.5 kg)

Tabletop Conferencing Device Dimension Drawing

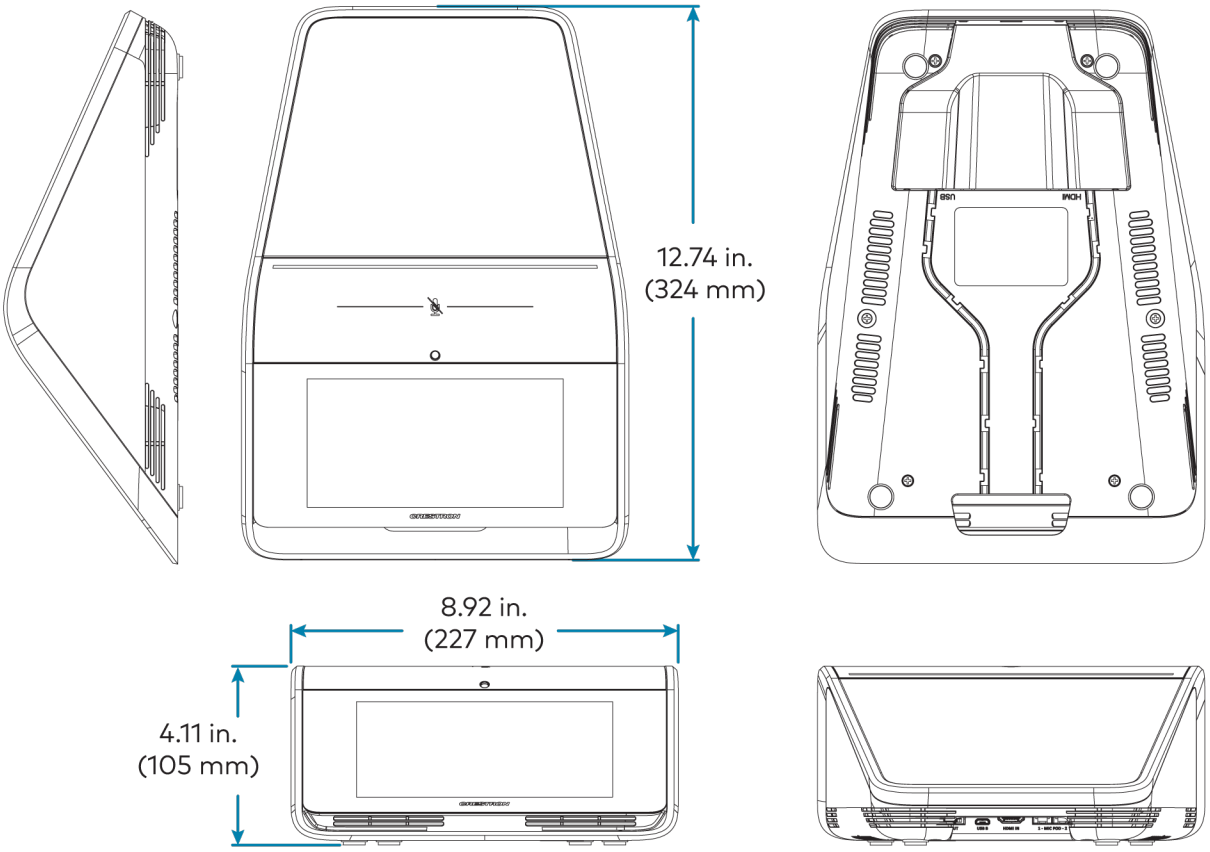

Camera Specifications

CCS-CAM-USB-F-400

Image Sensor	12 Megapixel 1/2.3 CMOS sensor
Lens	High precision, ultra wide angle, six element aspherical glass lens
Field of View	150° diagonal, 120° horizontal, 90° vertical
Aperture	f/2.8
Autozoom	Genius Framing automatic lossless digital zoom intelligently frames around people in the room
Connectivity	Plug-and-play USB 3.1
Resolution/FPS	HD 1080p @ 30 fps
Dimensions	Height: 1.40 in. (36 mm) Width: 1.60 in. (41 mm) Depth: 2.82 in. (72 mm)
Weight	4.2 oz (120 g)

UC-CAM-L1

Image Sensor	20.30 Megapixels 1 in. CMOS Sensor
Lens	High precision, wide angle, aspherical glass lens
Field of View	103° diagonal, 92° horizontal, 65° vertical
Aperture	f/2.9
Autozoom	Genius Framing automatic lossless digital zoom intelligently frames around people in the room
Connectivity	USB 3.0 port (via USB to PoE Adapter)
Power	5VDC power adapter
Resolution/FPS	HD 1080p @ 30 fps
Dimensions	Height: 2.1 in. (53 mm) Width: 4.8 in. (122 mm) Depth: 3.5 in. (89 mm)
Weight	1.3 lb (0.6 kg)

Microphone Pod Specifications

Model	CCS-UCA-MIC
Communications	A2B bus protocol, slave, synchronous data, multichannel I2S/TDM to I2S/TDM
Microphone	Triple mic array with (3) cardioid electret elements
Pickup Range	20 ft (6 m) typical, 360°
Mic Mute	(1) Capacitive button with bi-color LED, toggles between mute and unmute (affects all system mics)
Connectors	(2) RJ9 4P4C connector, female
Power	Powered via the conference device through the A2B bus
Dimensions	Height: 0.97 in (25 mm) Width: 3.81 in (97 mm) Depth: 3.42 in (87 mm)

Microphone Pod Dimension Drawing

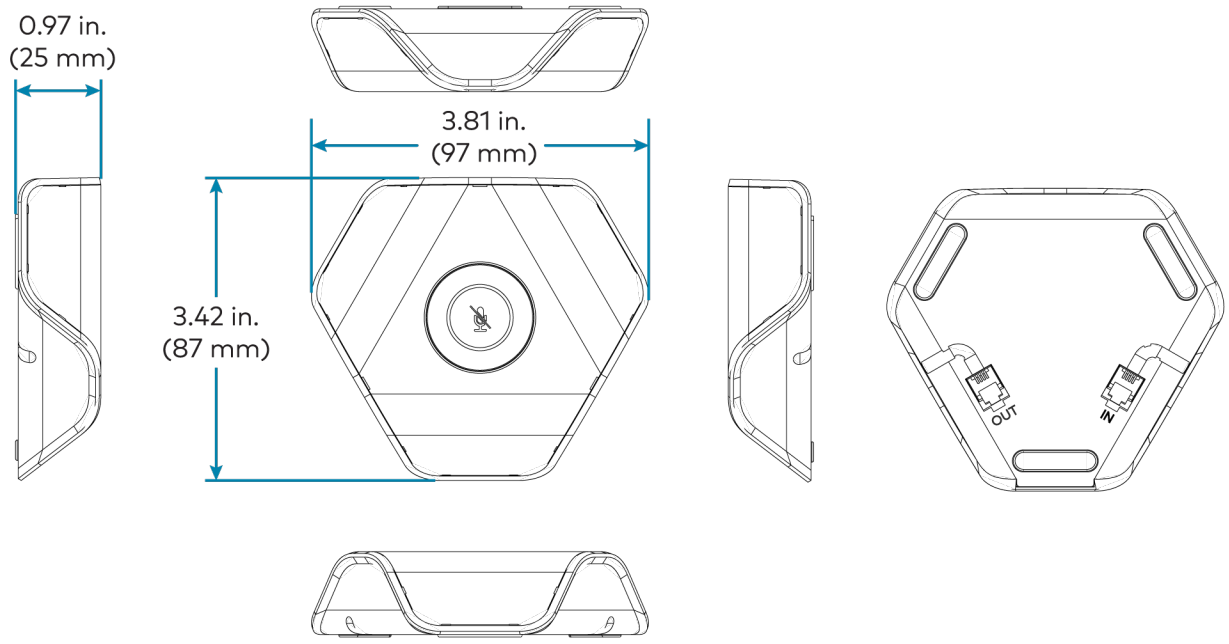

HDMI over CATx Receiver Specifications

Device name: HD-RX-USB-2000-C

Video Output Signal Types	HDMI (DVI-compatible*) * Requires CBL-HD-DVI interface cable (sold separately)
Audio Output Signal Types	HDMI
Communications	Ethernet: 100 Mbps pass-through; USB: USB 2.0 pass-through for camera; RS-232: 2-way serial pass-through up to 115.2k baud (Transmit Data/Receive Data only); IR: IR signal pass-through up to 60 kHz; HDMI: HDCP 2.2, EDID, CEC pass-through HDMI over CATx*: HDCP 2.2, EDID, Ethernet, CEC/IR/RS-232 *CAT5e or better
Power Pack (included)	Input: 0.8 A (maximum) @ 100-240 VAC, 50/60 Hz; Output: 1.25 A @ 24 VDC; Model: PW-2412WU
Dimensions	Height: 4.47 in. (114 mm) Width: 9.61 in. (244 mm) Depth: 0.99 in. (25 mm)
Weight	1.71 lb (776 g)

HDMI over CATx Receiver Dimension Drawing

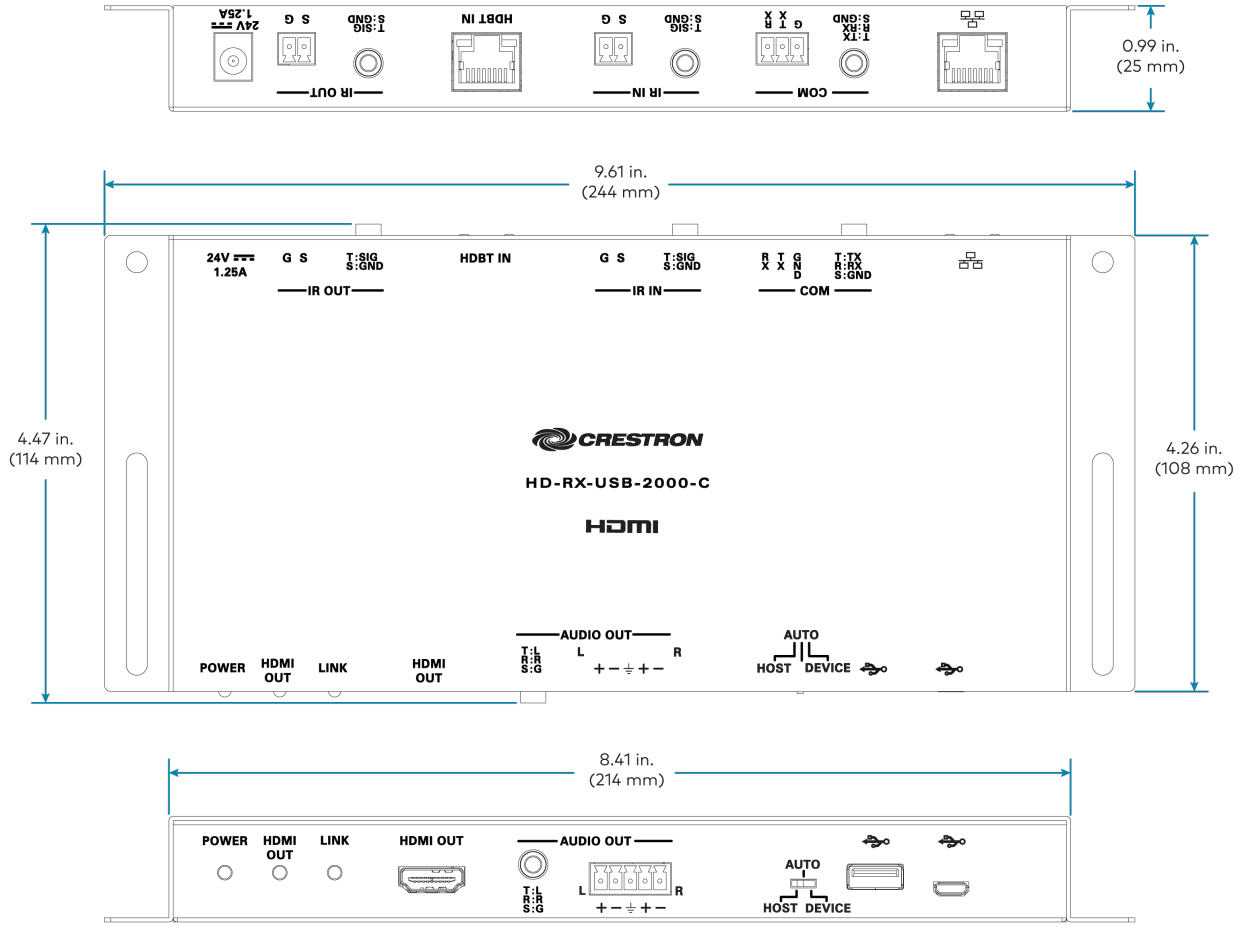

Quick Start Guides

This section provides the following information:

UC-M50-UA

In The Box

Qty.	Description
	Mercury Tabletop Conference Device
1	Tabletop Conference Device (6508227)
1	Cable, CAT5e, RJ-45 - RJ-45, 12 ft (3.7 m) (2033988)
1	Cable Retention Plate (2047908)
3	Tie Wrap (2047935)
	Additional Items
1	Cable, USB 2.0, A - Micro-B, 6 ft (1.8 m) (6510947)
1	Power supply (6500187)

Mount Devices

Mount the Tabletop Conference Device

The tabletop conference device can be placed on any flat surface or secured on a table using the CCS-UCA-SMK tabletop swivel mount kit (sold separately).

Install the Cable Retention Plate

The included cable retention plate provides tie-down points for cables that connect to the Crestron® conference device.

Remove the adhesive backing from the cable retention plate and install the plate on the underside of the conference device as shown in the following diagram. Ensure the cable retention plate is firmly attached before securing cables.

CAUTION: When turning over the device, place the device on a soft surface to avoid damage.

NOTE: If a swivel mount kit (CCS-UCA-SMK) is to be used, use the cable retention bracket included with the swivel mount kit as described in the CCS-UCA-SMK DO Guide (Doc. 7882).

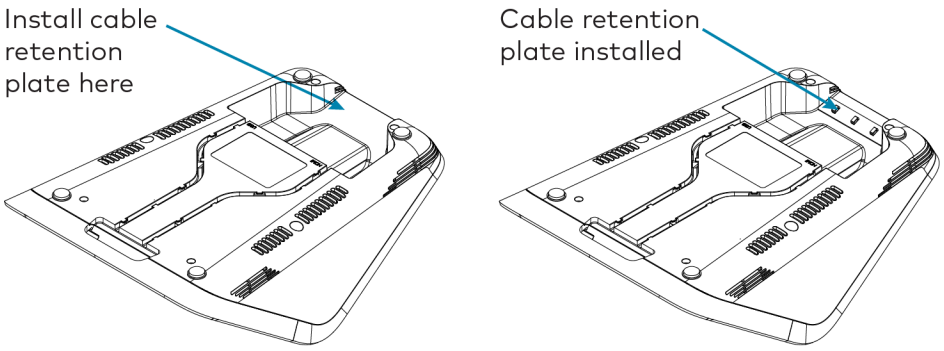

Connect

Make system connections as shown below:

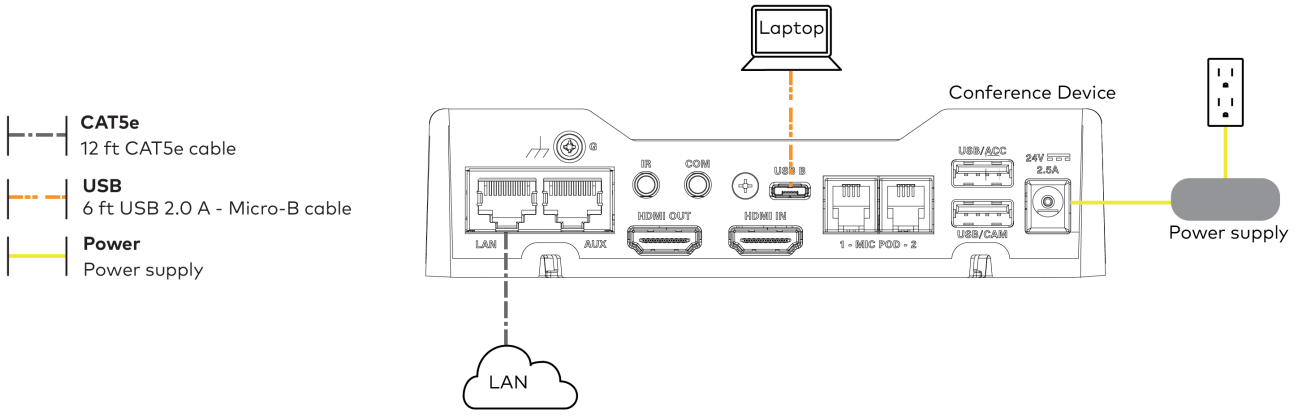

Bundle Cables

Bundle the cables together and use a provided tie wrap to secure the bundle to one of the positions on the cable retention plate at the rear of the device. Avoid bundling power and data cables together.

Insert the included USB cable into the respective cable channel as labeled on the underside of the conference device and as shown in the following image.

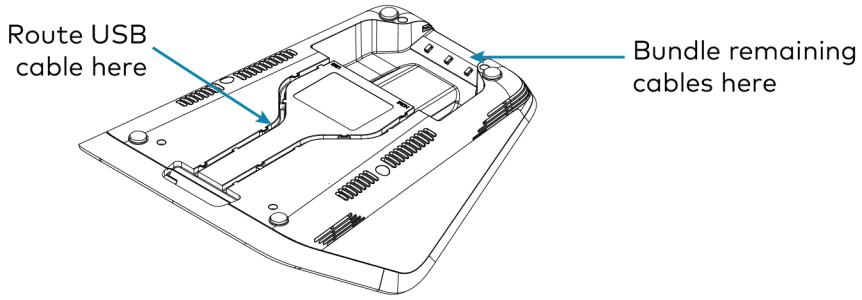

NOTES:

- When routing the USB cable through the channel out of the front of the device, the cable does not need to be bundled. If the system design requires routing the USB cable through the rear of the device, the cable should be bundled and secured to the cable retention plate.
- When using a swivel mount kit, do not route the USB cable through the swivel tube.

Configure

Configure the device using the web interface. To access the web interface, enter the device's IP address into a web browser. Select the gear icon in the upper right-hand corner of the screen and enter the username ("admin") and password ("admin") when prompted.

> **NOTE:** To find the device's IP address, tap the information icon on the device's home screen.

For detailed configuration information, refer to the CCS-UC-1 Product Manual (Doc. 7844).

UC-M50-U

In The Box

Qty.	Description
	Mercury Tabletop Conference Device
1	Tabletop Conference Device (6508083)
1	Cable, CAT5e, RJ-45 - RJ-45, 12 ft (3.7 m) (2033988)
1	Cable Retention Plate (2047908)
3	Tie Wrap (2047935)
	CCS-CAM-USB-F-400 Collaboration Camera
1	Collaboration camera (6510482)
1	Camera wall mount kit (6510998)
	Additional Items
1	Cable, USB 2.0, A - Micro-B, 6 ft (1.8 m) (6510947)
1	Power supply (6500187)
1	Cable, USB 3.0, USB-C® Right Angle - A, 6 ft (1.8 m) (6511591)
1	Cable, thin HDMI®, 6 ft (1.8 m) (6510946)
1	Cable, HDMI, 20 ft (6.1 m) (6503567)
1	Cable, USB Extension, USB Type A Male-to-Female, 15 ft (4.6 m) (6508260)
1	IR Emitter Probe (6500940)

Mount Devices

Mount the Camera

Mount the included camera according to the UC-CAM-WMK Quick Start (Doc. 8257).

Mount the Tabletop Conference Device

The tabletop conference device can be placed on any flat surface or secured on a table using the CCS-UCA-SMK tabletop swivel mount kit (sold separately).

Install the Cable Retention Plate

The included cable retention plate provides tie-down points for cables that connect to the Crestron® conference device.

Remove the adhesive backing from the cable retention plate and install the plate on the underside of the conference device as shown in the following diagram. Ensure the cable retention plate is firmly attached before securing cables.

> **CAUTION:** When turning over the device, place the device on a soft surface to avoid damage.

NOTE: If a swivel mount kit (CCS-UCA-SMK) is to be used, use the cable retention bracket included with the swivel mount kit as described in the CCS-UCA-SMK DO Guide (Doc. 7882).

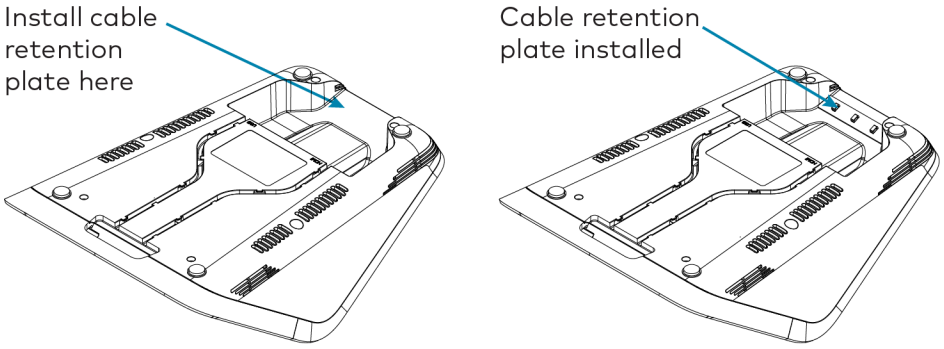

Connect

Make system connections as shown below:

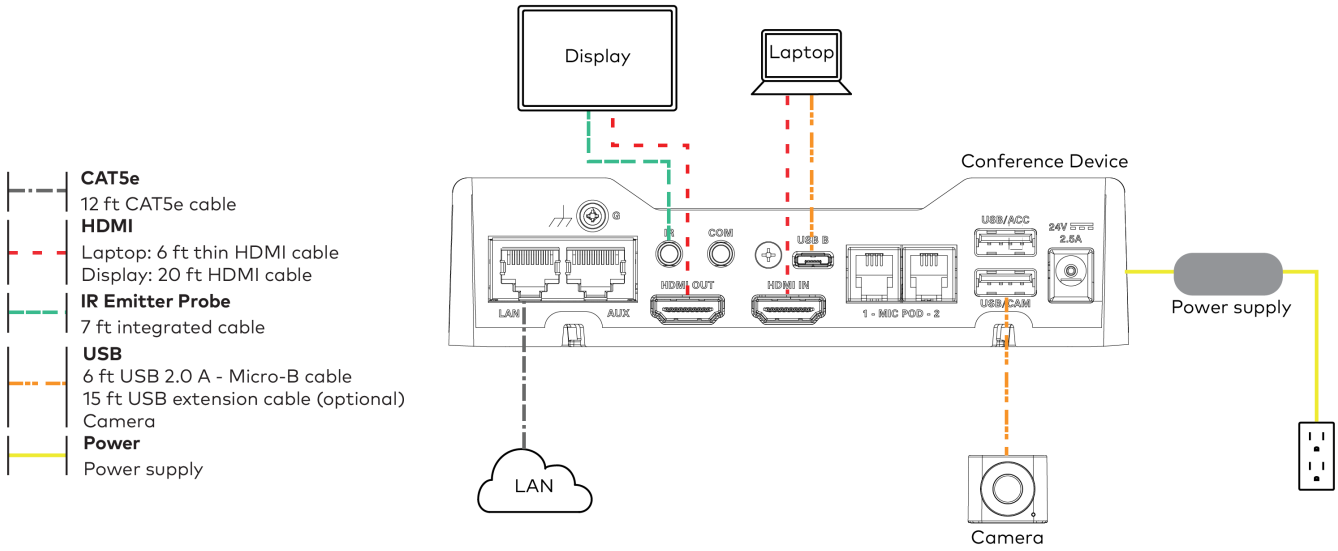

Bundle Cables

Bundle the cables together and use a provided tie wrap to secure the bundle to one of the positions on the cable retention plate at the rear of the device. Avoid bundling power and data cables together.

Insert the included USB and HDMI cables into their respective cable channels as labeled on the underside of the conference device and as shown in the following image.

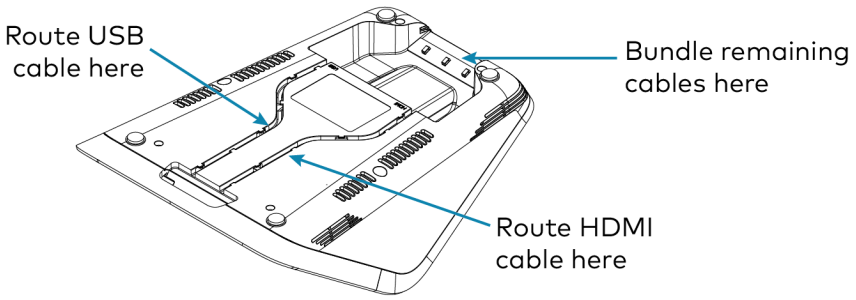

NOTES:

- When routing the USB and HDMI cables through the channels out of the front of the device, the cables do not need to be bundled. If the system design requires routing the USB and HDMI cables through the rear of the device, the cables should be bundled and secured to the cable retention plate.
- When using a swivel mount kit, do not route the USB and HDMI cables through the swivel tube.

Configure

Configure the device using the web interface. To access the web interface, enter the device's IP address into a web browser. Select the gear icon in the upper right-hand corner of the screen and enter the username ("admin") and password ("admin") when prompted.

NOTE: To find the device's IP address, tap the information icon on the device's home screen.

For detailed configuration information, refer to the CCS-UC-1 Product Manual (Doc. 7844).

UC-MX50-U

In The Box

Qty.	Description
	Mercury Tabletop Conference Device
1	Tabletop Conference Device (6510610)
1	Cable, CAT5e, RJ-45 - RJ-45, 12 ft (3.7 m) (2033988)
1	Power supply (2045873) with cord (2042043)
1	Cable Retention Plate (2047908)
3	Tie Wrap (2047935)
	CCS-CAM-USB-F-400 Collaboration Camera
1	Collaboration camera (6510482)
1	Camera wall mount kit (6510998)
	Additional Items
1	Cable, USB 2.0, A - Micro-B, 6 ft (1.8 m) (6510947)
1	Cable, USB 3.0, USB-C® Right Angle - A, 6 ft (1.8 m) (6511591)
1	Cable, thin HDMI®, 6 ft (1.8 m) (6510946)
1	IR Emitter Probe (6500940)
1	Cable, CAT6a, RJ-45 - RJ-45, 20 ft (6.1 m) (6507640)
1	Cable, HDMI 2.1, 6 ft (1.8 m) (6512150)

Mount Devices

Mount the Camera

Mount the included camera according to the UC-CAM-WMK Quick Start (Doc. 8257).

Mount the Tabletop Conference Device

The tabletop conference device can be placed on any flat surface or secured on a table using the CCS-UCA-SMK tabletop swivel mount kit (sold separately).

Install the Cable Retention Plate

The included cable retention plate provides tie-down points for cables that connect to the Crestron® conference device.

Remove the adhesive backing from the cable retention plate and install the plate on the underside of the conference device as shown in the following diagram. Ensure the cable retention plate is firmly attached before securing cables.

> **CAUTION:** When turning over the device, place the device on a soft surface to avoid damage.

NOTE: If a swivel mount kit (CCS-UCA-SMK) is to be used, use the cable retention bracket included with the swivel mount kit as described in the CCS-UCA-SMK DO Guide (Doc. 7882).

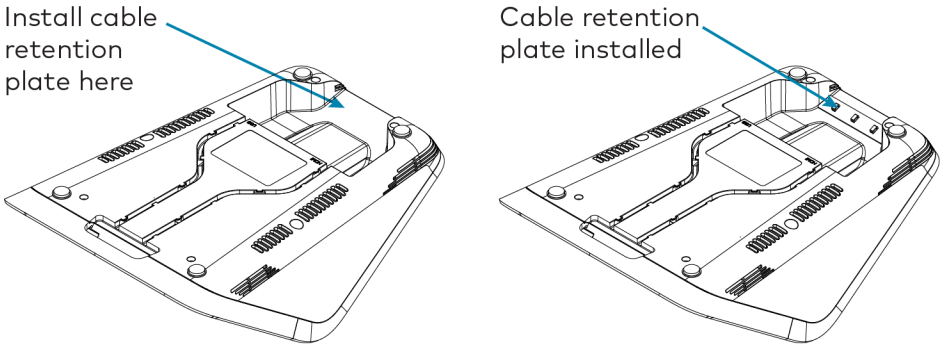

Connect

Make system connections as shown below:

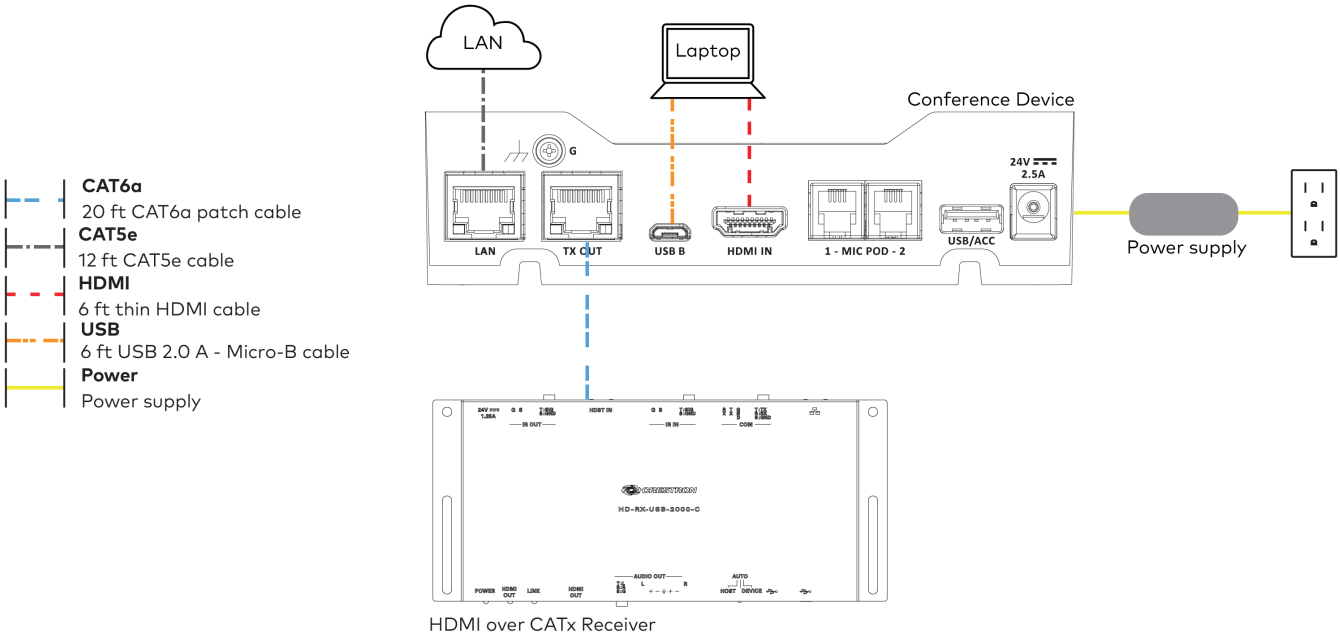

HDMI over CATx Receiver

Make the remaining system connections as shown below:

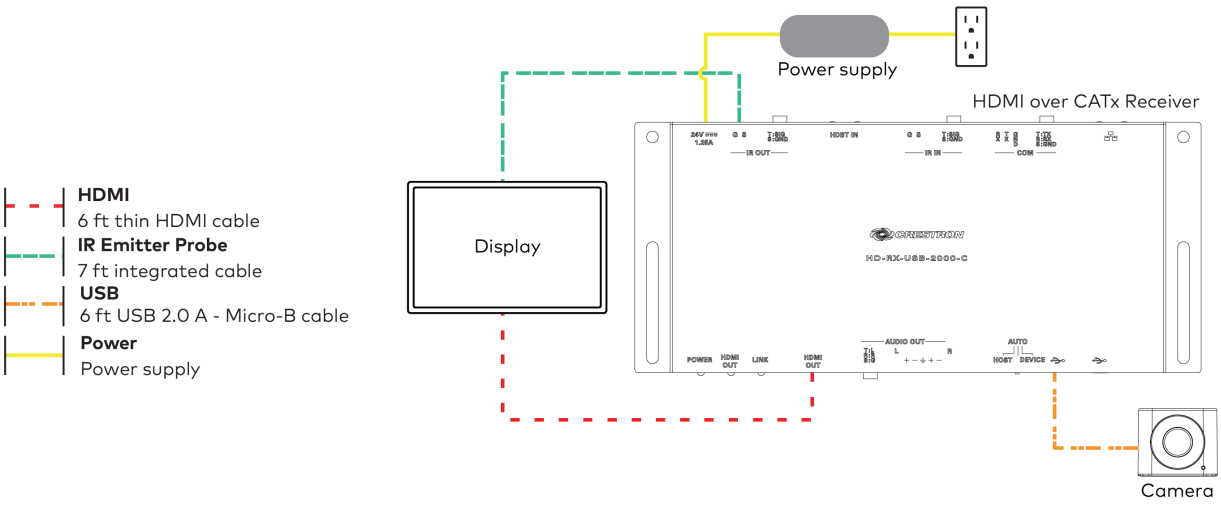

Bundle Cables

Bundle the cables together and use a provided tie wrap to secure the bundle to one of the positions on the cable retention plate at the rear of the device. Avoid bundling power and data cables together.

Insert the included USB and HDMI cables into their respective cable channels as labeled on the underside of the conference device and as shown in the following image.

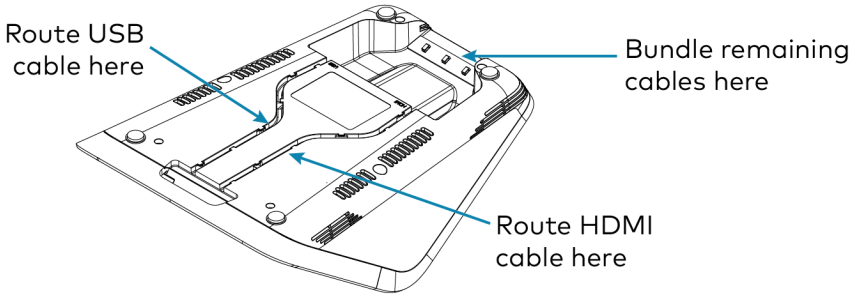

NOTES:

- When routing the USB and HDMI cables through the channels out of the front of the device, the cables do not need to be bundled. If the system design requires routing the USB and HDMI cables through the rear of the device, the cables should be bundled and secured to the cable retention plate.
- When using a swivel mount kit, do not route the USB and HDMI cables through the swivel tube.

Configure

Configure the device using the web interface. To access the web interface, enter the device's IP address into a web browser. Select the gear icon in the upper right-hand corner of the screen and enter the username ("admin") and password ("admin") when prompted.

> **NOTE:** To find the device's IP address, tap the information icon on the device's home screen.

For detailed configuration information, refer to the CCS-UC-1 Product Manual (Doc. 7844).

UC-M70-UA

In The Box

Qty.	Description
	Mercury Tabletop Conference Device
1	Tabletop Conference Device (6508227)
1	Cable, CAT5e, RJ-45 - RJ-45, 12 ft (3.7 m) (2033988)
1	Cable Retention Plate (2047908)
3	Tie Wrap (2047935)
	Microphone Pod
1	Extension Microphone Pod (6508084)
	Additional Items
1	Cable, USB 2.0, A - Micro-B, 6 ft (1.8 m) (6510947)
1	Power supply (6500187)

Mount Devices

Mount the Tabletop Conference Device

The tabletop conference device can be placed on any flat surface or secured on a table using the CCS-UCA-SMK tabletop swivel mount kit (sold separately).

Install the Cable Retention Plate

The included cable retention plate provides tie-down points for cables that connect to the Crestron® conference device.

Remove the adhesive backing from the cable retention plate and install the plate on the underside of the conference device as shown in the following diagram. Ensure the cable retention plate is firmly attached before securing cables.

> **CAUTION:** When turning over the device, place the device on a soft surface to avoid damage.

> **NOTE:** If a swivel mount kit (CCS-UCA-SMK) is to be used, use the cable retention bracket included with the swivel mount kit as described in the CCS-UCA-SMK DO Guide (Doc. 7882).

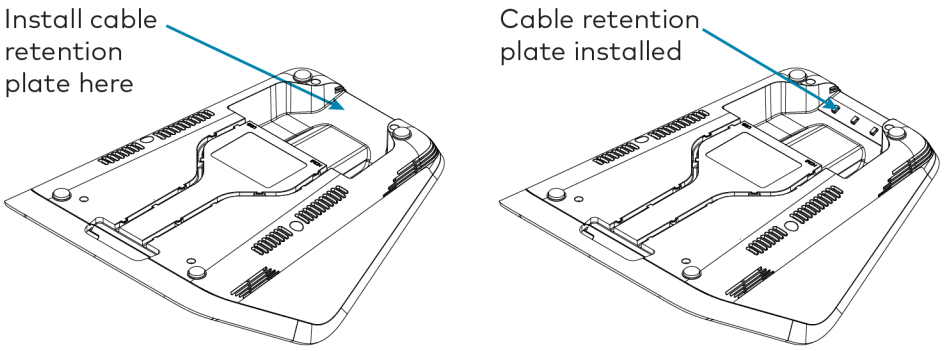

Connect

Make system connections as shown below:

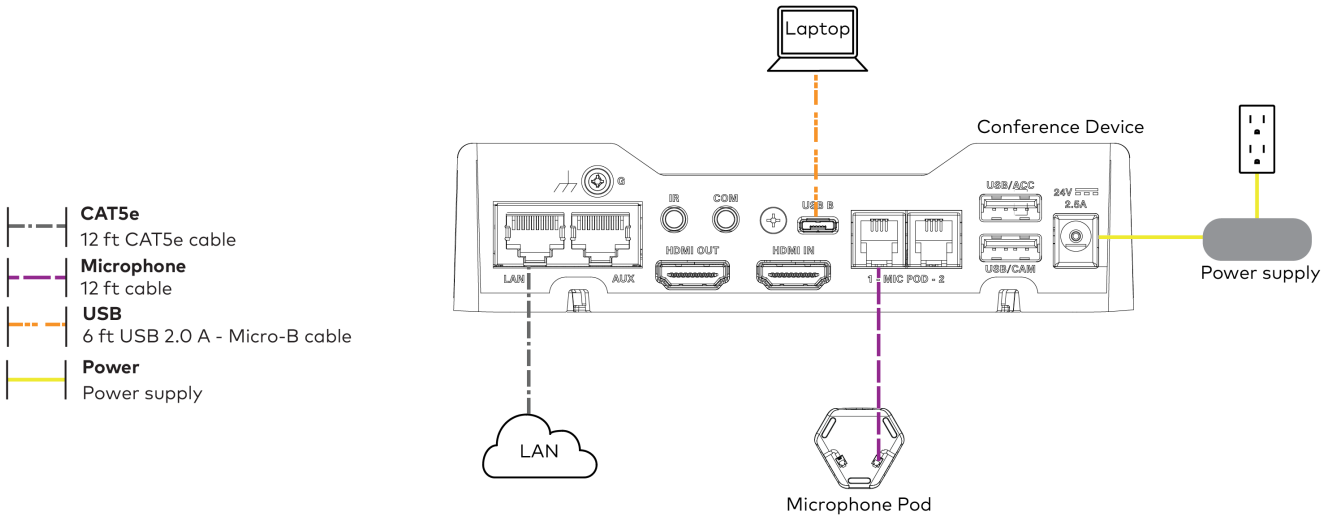

Bundle Cables

Bundle the cables together and use a provided tie wrap to secure the bundle to one of the positions on the cable retention plate at the rear of the device. Avoid bundling power and data cables together.

Insert the included USB cable into the respective cable channel as labeled on the underside of the conference device and as shown in the following image.

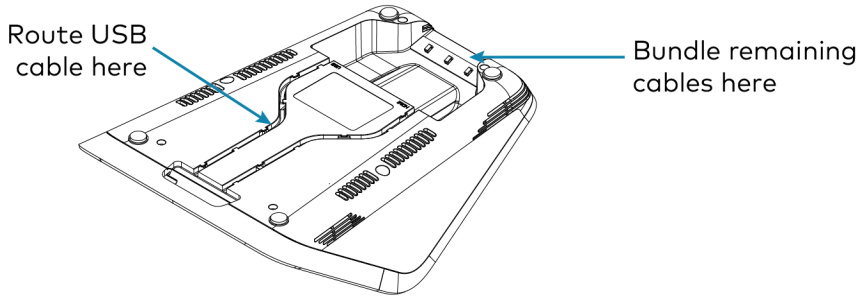

NOTES:

- When routing the USB cable through the channel out of the front of the device, the cable does not need to be bundled. If the system design requires routing the USB cable through the rear of the device, the cable should be bundled and secured to the cable retention plate.
- When using a swivel mount kit, do not route the USB cable through the swivel tube.

Configure

Configure the device using the web interface. To access the web interface, enter the device's IP address into a web browser. Select the gear icon in the upper right-hand corner of the screen and enter the username ("admin") and password ("admin") when prompted.

NOTE: To find the device's IP address, tap the information icon on the device's home screen.

For detailed configuration information, refer to the CCS-UC-1 Product Manual (Doc. 7844).

UC-M70-U

In The Box

Qty.	Description
	Mercury Tabletop Conference Device
1	Tabletop Conference Device (6508083)
1	Cable, CAT5e, RJ-45 - RJ-45, 12 ft (3.7 m) (2033988)
1	Cable Retention Plate (2047908)
3	Tie Wrap (2047935)
	CCS-CAM-L1 AI Collaboration Camera
1	AI collaboration camera (6512296)
	Microphone Pod
1	Extension Microphone Pod (6508084)
	Additional Items
1	Cable, USB 2.0, A - Micro-B, 6 ft (1.8 m) (6510947)
1	Power supply (6500187)
1	Cable, thin HDMI®, 6 ft (1.8 m) (6510946)
1	Cable, HDMI, 20 ft (6.1 m) (6503567)
1	Cable, USB Extension, USB Type A Male-to-Female, 15 ft (4.6 m) (6508260)
1	IR Emitter Probe (6500940)

Mount Devices

Mount the Camera

Mount the included camera according to its documentation.

Mount the Tabletop Conference Device

The tabletop conference device can be placed on any flat surface or secured on a table using the CCS-UCA-SMK tabletop swivel mount kit (sold separately).

Install the Cable Retention Plate

The included cable retention plate provides tie-down points for cables that connect to the Crestron® conference device.

Remove the adhesive backing from the cable retention plate and install the plate on the underside of the conference device as shown in the following diagram. Ensure the cable retention plate is firmly attached before securing cables.

> **CAUTION:** When turning over the device, place the device on a soft surface to avoid damage.

NOTE: If a swivel mount kit (CCS-UCA-SMK) is to be used, use the cable retention bracket included with the swivel mount kit as described in the CCS-UCA-SMK DO Guide (Doc. 7882).

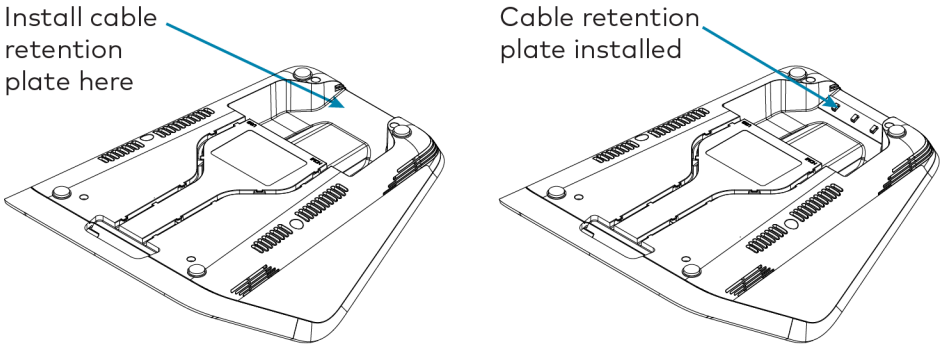

Connect

Make system connections as shown below:

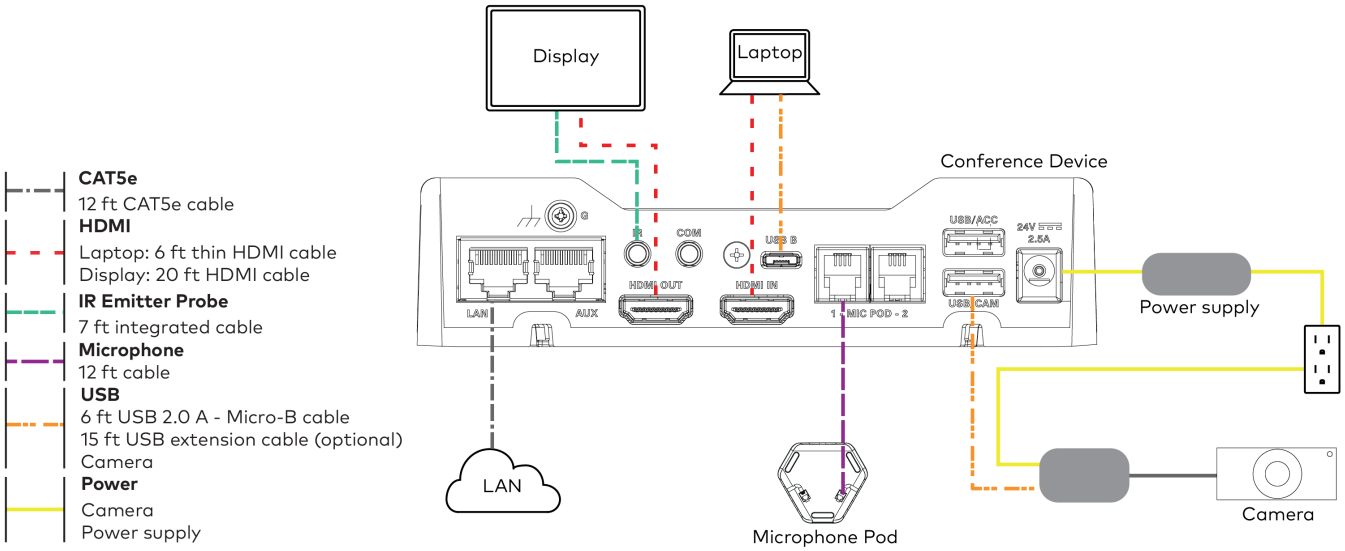

Bundle Cables

Bundle the cables together and use a provided tie wrap to secure the bundle to one of the positions on the cable retention plate at the rear of the device. Avoid bundling power and data cables together.

Insert the included USB and HDMI cables into their respective cable channels as labeled on the underside of the conference device and as shown in the following image.

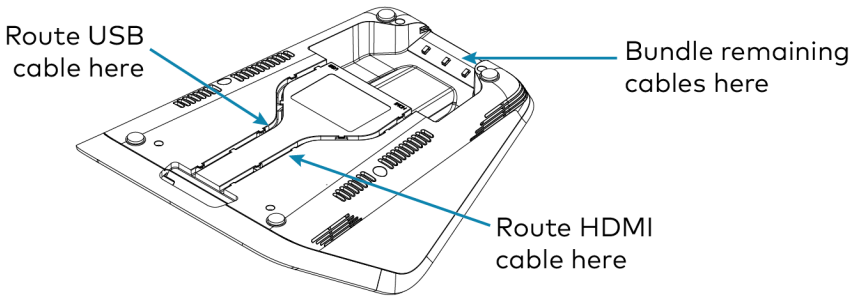

NOTES:

- When routing the USB and HDMI cables through the channels out of the front of the device, the cables do not need to be bundled. If the system design requires routing the USB and HDMI cables through the rear of the device, the cables should be bundled and secured to the cable retention plate.
- When using a swivel mount kit, do not route the USB and HDMI cables through the swivel tube.

Configure

Configure the device using the web interface. To access the web interface, enter the device's IP address into a web browser. Select the gear icon in the upper right-hand corner of the screen and enter the username ("admin") and password ("admin") when prompted.

NOTE: To find the device's IP address, tap the information icon on the device's home screen.

For detailed configuration information, refer to the CCS-UC-1 Product Manual (Doc. 7844).

UC-MX70-U

In The Box

Qty.	Description
	Mercury Tabletop Conference Device
1	Tabletop Conference Device (6510610)
1	Cable, CAT5e, RJ-45 - RJ-45, 12 ft (3.7 m) (2033988)
1	Power supply (2045873) with cord (2042043)
1	Cable Retention Plate (2047908)
3	Tie Wrap (2047935)
	CCS-CAM-L1 AI Collaboration Camera
1	AI collaboration camera (6512296)
	Microphone Pod
1	Extension Microphone Pod (6508084)
	Additional Items
1	Cable, USB 2.0, A - Micro-B, 6 ft (1.8 m) (6510947)
1	Cable, thin HDMI®, 6 ft (1.8 m) (6510946)
1	IR Emitter Probe (6500940)
1	Cable, CAT6a, RJ-45 - RJ-45, 20 ft (6.1 m) (6507640)
1	Cable, HDMI 2.1, 6 ft (1.8 m) (6512150)

Mount Devices

Mount the Camera

Mount the included camera according to its documentation.

Mount the Tabletop Conference Device

The tabletop conference device can be placed on any flat surface or secured on a table using the CCS-UCA-SMK tabletop swivel mount kit (sold separately).

Install the Cable Retention Plate

The included cable retention plate provides tie-down points for cables that connect to the Crestron® conference device.

Remove the adhesive backing from the cable retention plate and install the plate on the underside of the conference device as shown in the following diagram. Ensure the cable retention plate is firmly attached before securing cables.

> **CAUTION:** When turning over the device, place the device on a soft surface to avoid damage.

NOTE: If a swivel mount kit (CCS-UCA-SMK) is to be used, use the cable retention bracket included with the swivel mount kit as described in the CCS-UCA-SMK DO Guide (Doc. 7882).

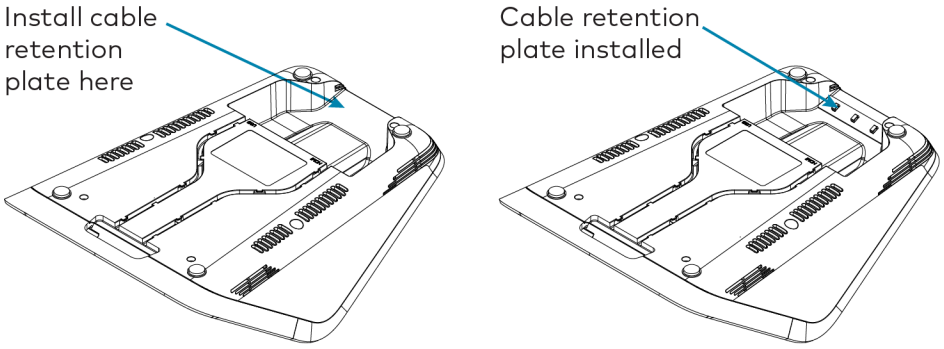

Connect

Make system connections as shown below:

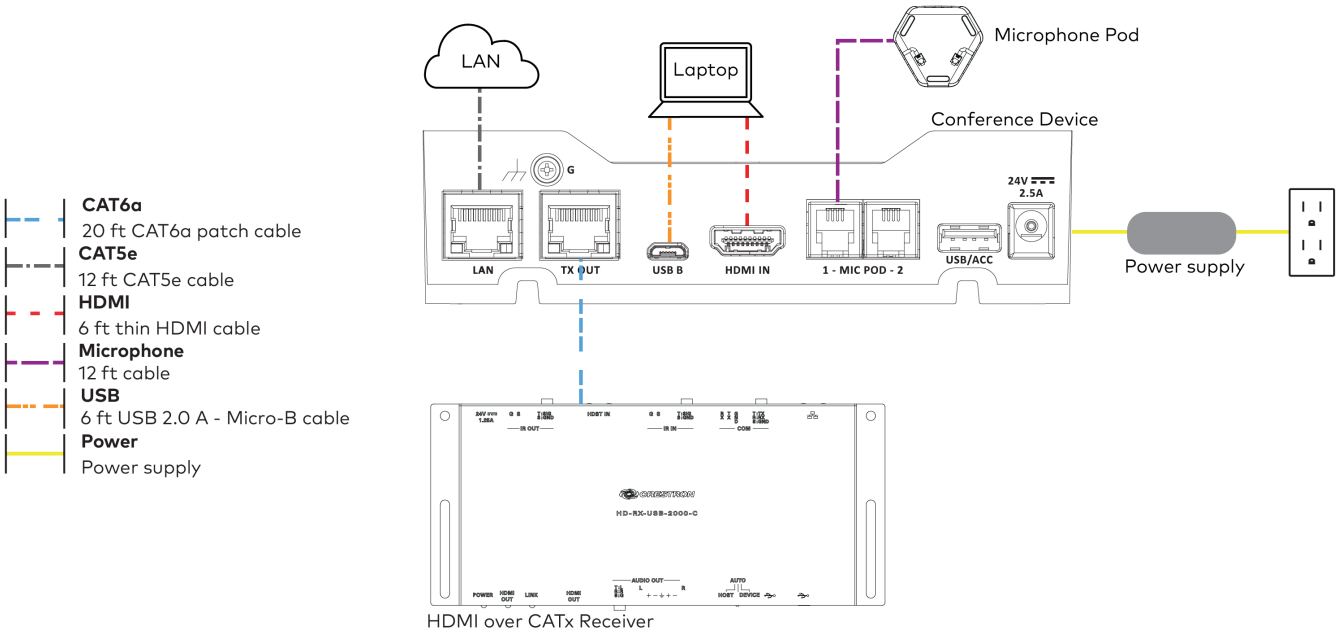

Make the remaining system connections as shown below:

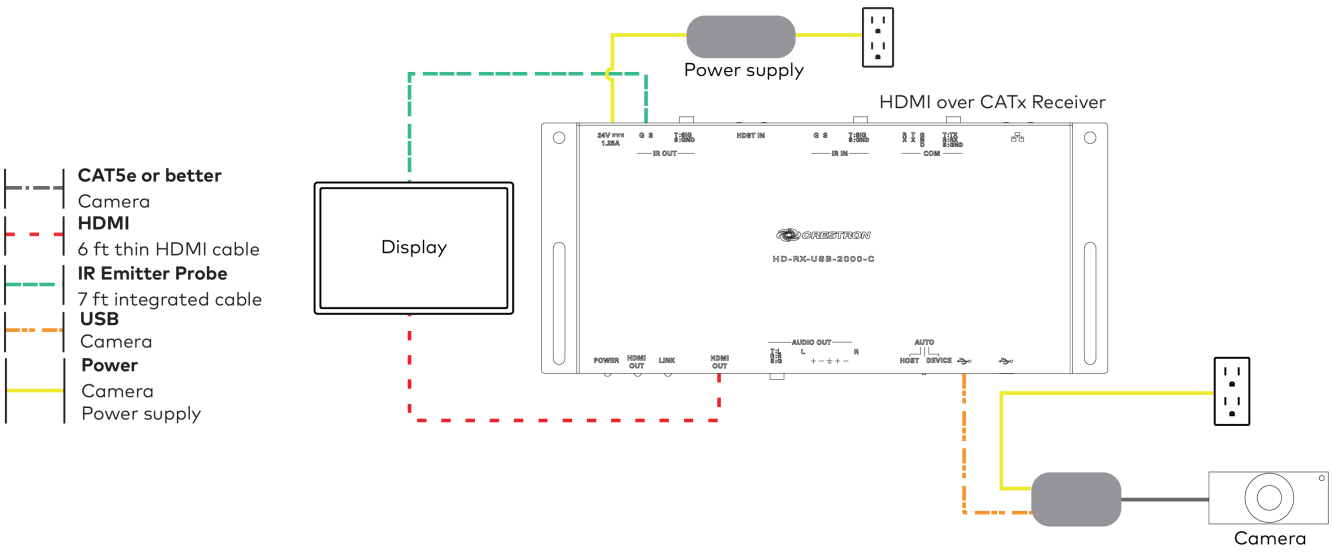

Bundle Cables

Bundle the cables together and use a provided tie wrap to secure the bundle to one of the positions on the cable retention plate at the rear of the device. Avoid bundling power and data cables together.

Insert the included USB and HDMI cables into their respective cable channels as labeled on the underside of the conference device and as shown in the following image.

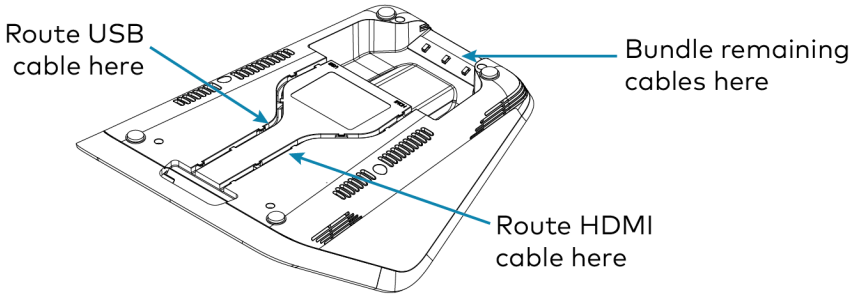

NOTES:

- When routing the USB and HDMI cables through the channels out of the front of the device, the cables do not need to be bundled. If the system design requires routing the USB and HDMI cables through the rear of the device, the cables should be bundled and secured to the cable retention plate.
- When using a swivel mount kit, do not route the USB and HDMI cables through the swivel tube.

Configure

Configure the device using the web interface. To access the web interface, enter the device's IP address into a web browser. Select the gear icon in the upper right-hand corner of the screen and enter the username ("admin") and password ("admin") when prompted.

> **NOTE:** To find the device's IP address, tap the information icon on the device's home screen.

For detailed configuration information, refer to the CCS-UC-1 Product Manual (Doc. 7844).

Crestron Flex Accessories

This section lists available accessories for the select Crestron Flex products. For pricing and other details, refer to the product pages of the selected accessory.

- ADPT-USB3.0-GBENET
- ADPT-USB-ENET
- CCS-UCA-MIC
- CCS-UCA-SMK
- UC-CAMA-ADPT-ENET-USB
- Specifications
- UCA-PWE-UC-2/UC-P8/P10
- UCA-RMK-1U
- UCA-SMK-UC2 and UCA-SMKR-UC2-3
- Installing UCA-SMK-UC2 and UCA-SMKR-UC2-3
- UC-SB2-DMK
- UC-SB2-TTK

ADPT-USB3.0-GBENET

The ADPT-USB3.0-GBENET is a USB-to-Ethernet Audio-over-IP (AoIP) isolation adapter for use with the UC-C100-T and UC-C100-T-WM kits. It isolates the AoIP traffic generated by in-room AoIP devices and the Shure® IntelliMix® Room digital signal processing (DSP) software from the rest of the network traffic on the UC-C100-T and UC-C100-T-WM kits.

The ADPT-USB3.0-GBENET supports up to 1000 Mbps transfer speed for reliable data transmission in a Crestron Flex system. LED indicators provide diagnostic information on the connection and data transfer.

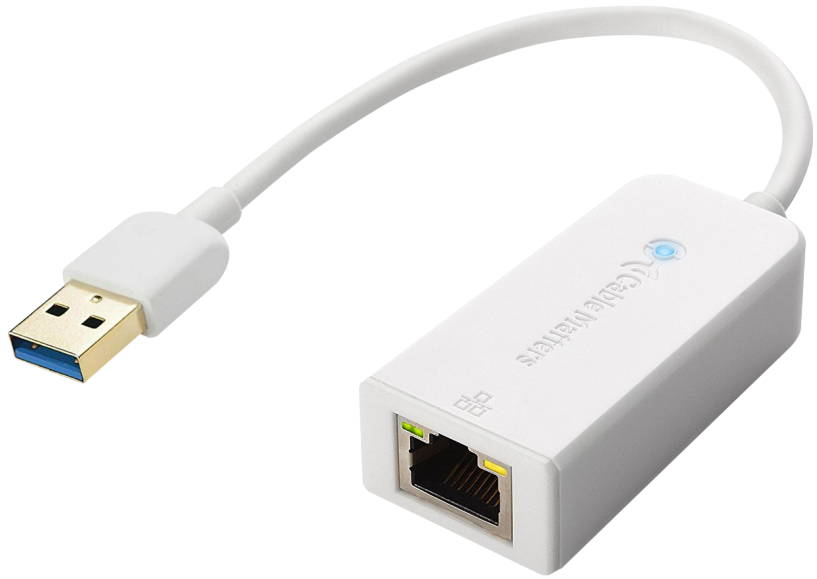

Connecting ADPT-USB3.0-GBENET

In the Box

Qty.	Description
1	USB-to-Ethernet audio isolation adapter (6512671)

Connections

To connect the ADPT-USB3.0-GBENET adapter to the UC-C100-T or UC-C100-T-WM:

1. Make the UC-C100-T or UC-C100-T-WM kit connections. For detailed connection instructions, refer to the UC-C100-T and UC-C100-T-WM Connections section.

2. After making the kit connections, connect the adapter to the UC Engine, as shown in the following illustration.

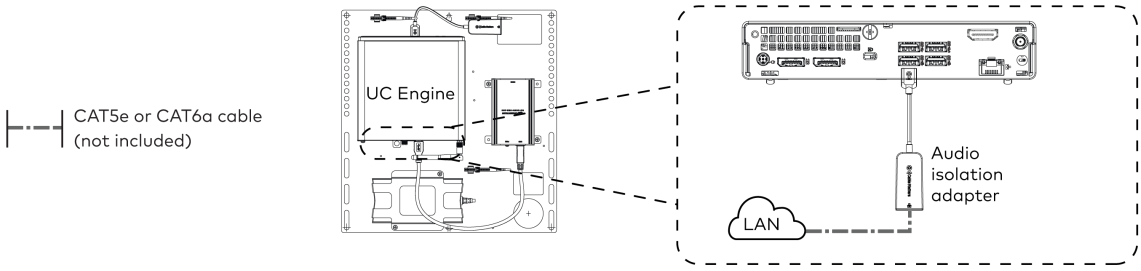

> **NOTE:** The USB port used to connect the ADPT-USB3.0-GBENET audio isolation adapter (shown in the above diagram) can also be used to connect a USB Audio device (as shown in the UC-C100-T and UC-C100-T-WM quick start guides), however, you can connect only one USB device at a time.

Configuring ADPT-USB3.0-GBENET

Set the IP Address

1. Log into the UC-Engine Windows administrator account using the Crestron Remote application.
2. Open **Control Panel** > **Network and Internet** > **Network and Sharing Center** and click **Ethernet 2** > **Properties**.
3. Double click **Internet Protocol Version 4 (TCP /IPv4)** to open its properties.

4. The TCP /IPv4 settings can be set automatically or manually.

   To specify the setting automatically:

   a. Select **Obtain an IP address automatically**.

   b. Select **Obtain DNS server address automatically**.

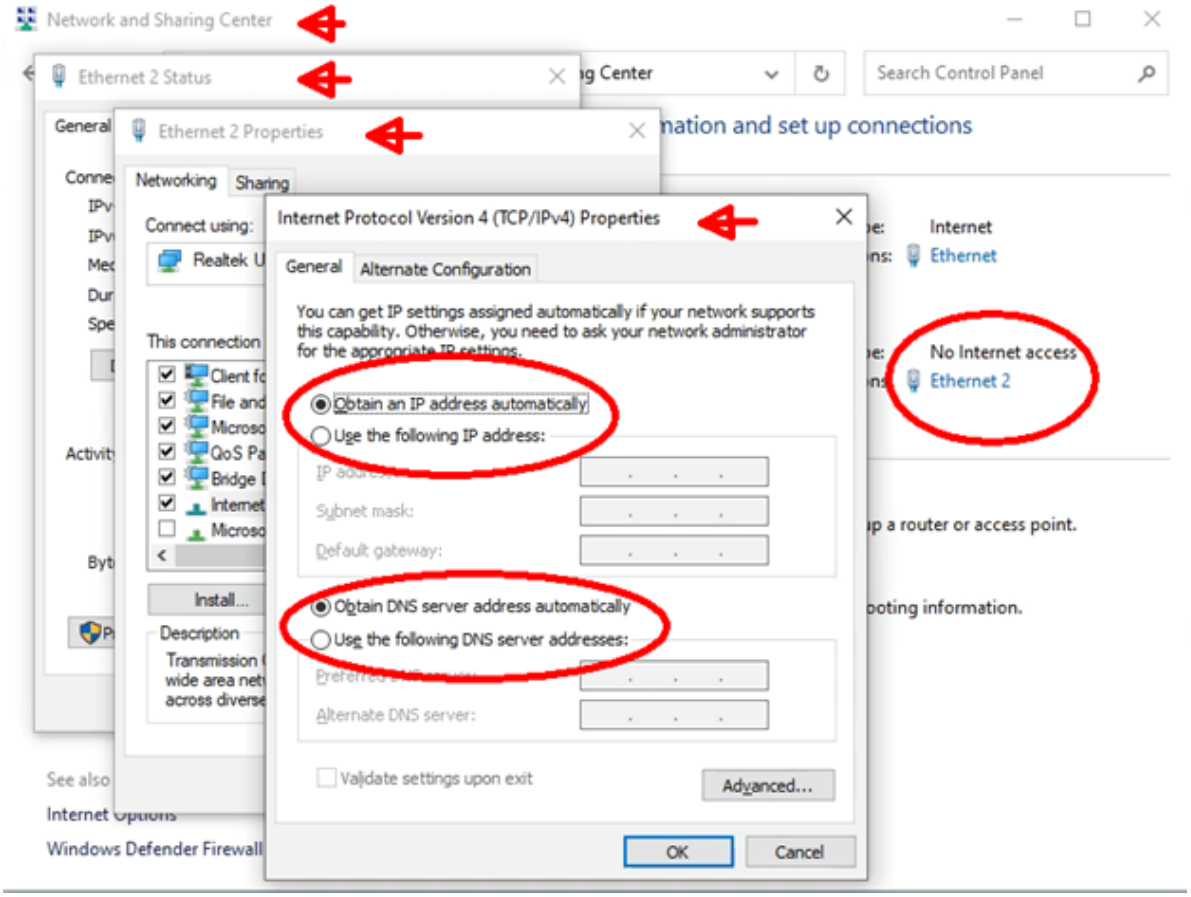

   To specify the settings manually:

   a. Select **Use the following IP address** and type the addresses in the **IP address**, **Subnet mask**, and **Gateway** fields.

   b. Select **Use the following DNS server addresses.** and type the addresses in the **Preferred DNS server** and **Alternate DNS server** fields.

5. Click **OK** to save the settings on each opened window until you return to the **Ethernet 2 Status** window.

6. Click **Details**.

   The **Network Connection Details** window appears.

7. Verify that the correct IP address is set.

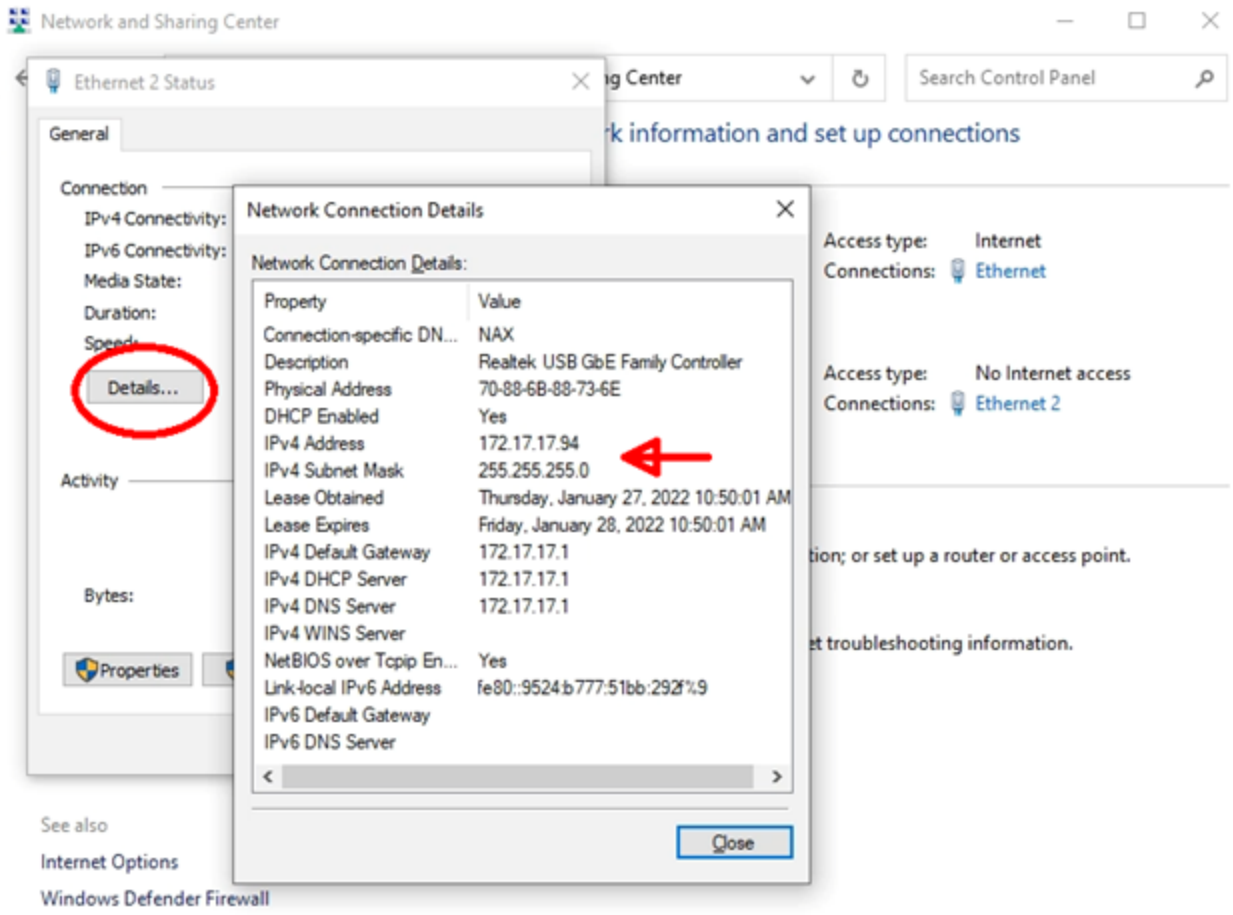

Configure Shure® IntelliMix® Room to Use Ethernet 2

1. On the UC-Engine, launch the IntelliMix Room by clicking its icon on the task bar.
2. Click **Network** on the left panel.
   a. Under Shure control, select **Ethernet 2**.
   b. Under Dante® Audio network, select **Ethernet 2**.

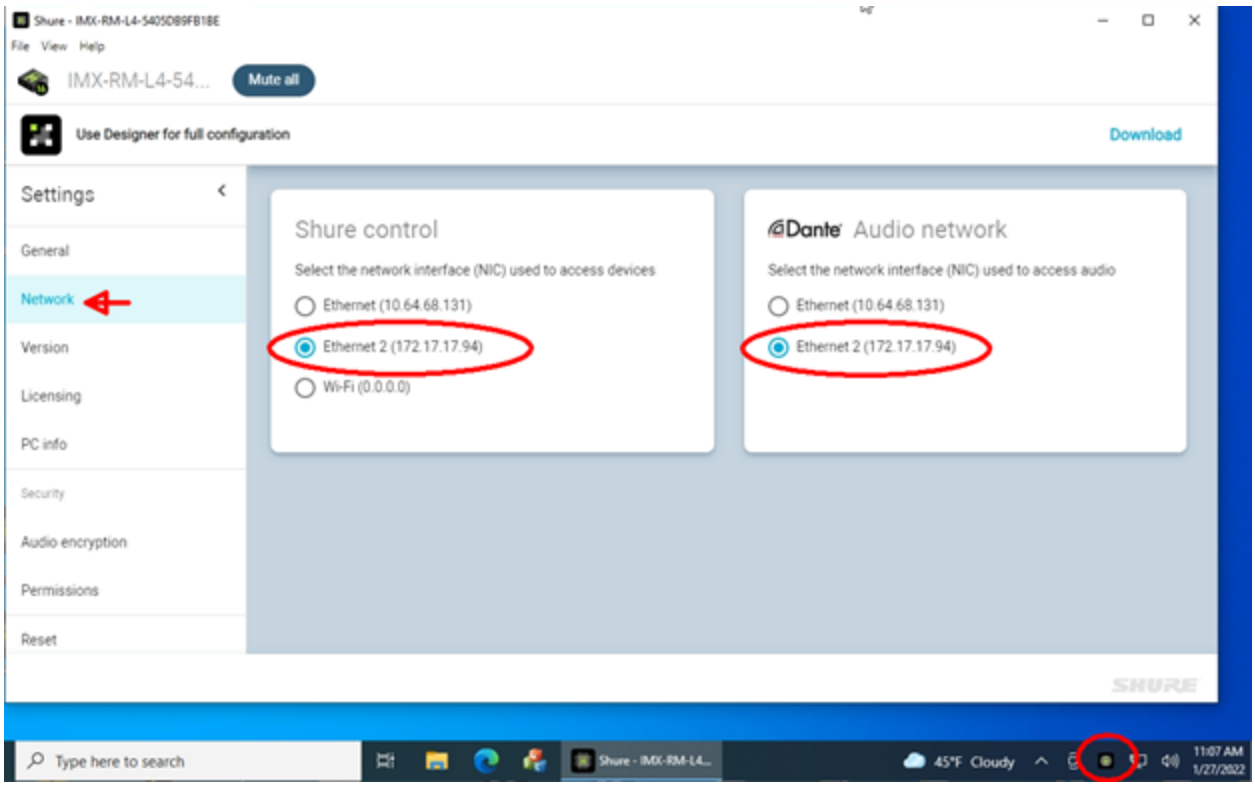

3. Close IntelliMix Room and restart the UC-Engine.

Set up Shure IntelliMix Using Shure Designer

1. Connect a PC that is running Shure Designer to the Ethernet 2 network.
2. Open Shure Designer.
3. Ensure that the UC-Engine running Shure Intellimix displays as an online device.
4. Add the UC-Engine, Dante mics, and speakers to a room and make appropriate routes to complete the configuration.

ADPT-USB-ENET

The ADPT-USB-ENET provides a direct connection between a UC-ENGINE or UC-ENGINE-SD and a Crestron® control interface in a Crestron Flex system. The direct connection accelerates deployment, ensures reliability, and provides long-term service while eliminating network setup dependencies related to hardware and security requirements.

The ADPT-USB-ENET supports up to 100 Mbps transfer speed for reliable data transmission in a Crestron Flex system. LED indicators provide diagnostic information on the connection and data transfer.

Connect the USB connector to a USB port on a UC-ENGINE or UC-ENGINE-SD and connect the RJ-45 port to a LAN port on a Crestron control interface with a CAT5 (or better) Ethernet cable (sold separately).



CCS-UCA-MIC

The CCS-UCA-MIC is a low-profile extension microphone pod designed exclusively for use with a Crestron Flex Tabletop Conference System. Up to two mic pods may be connected to a single conference device to extend its pickup range to cover large tables.

Optionally, two microphone pods may be daisy-chained, or connected to the mic pod ports on the rear of the conference device, using the cables provided with each microphone pod.



Connecting CCS-UCA-MIC

In the Box

Qty.	Description
1	CCS-UCA-MIC, Microphone pod (6508084)
1	Cable, RJ-9 - RJ-9, 12 ft (3.7 m) (2048239)

Connections

The mic pod is connected to the conference device. While a single mic pod must be connected using the Direct Connection on page 634 only, the conference device supports up to two mic pods, which can be connected using either Direct Connection on page 634 or Daisy-chain Connection on page 635.

Direct Connection

To connect up to two mic pods to the conference device, make system connections as shown in the following illustration:

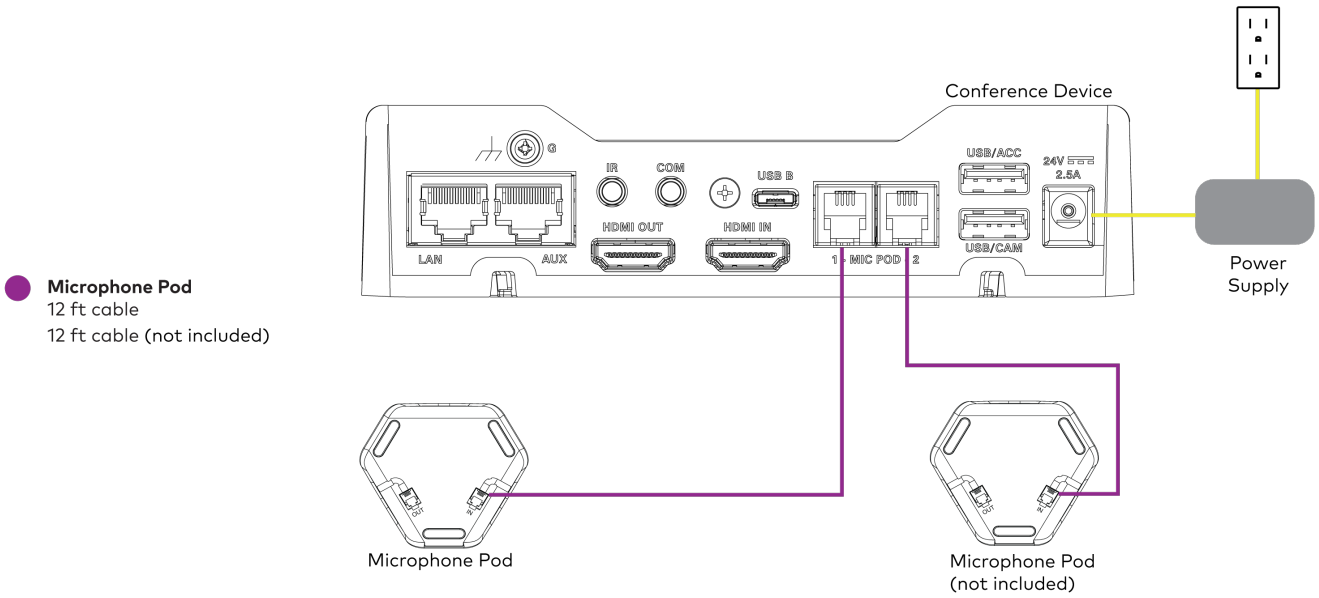

Daisy-chain Connection

To connect two mic pods to the conference device, make system connections as shown in the following illustration:

> **NOTE:** The conference device supports up to two mic pods connected using either Direct Connection on page 634 or Daisy-chain Connection on page 635.

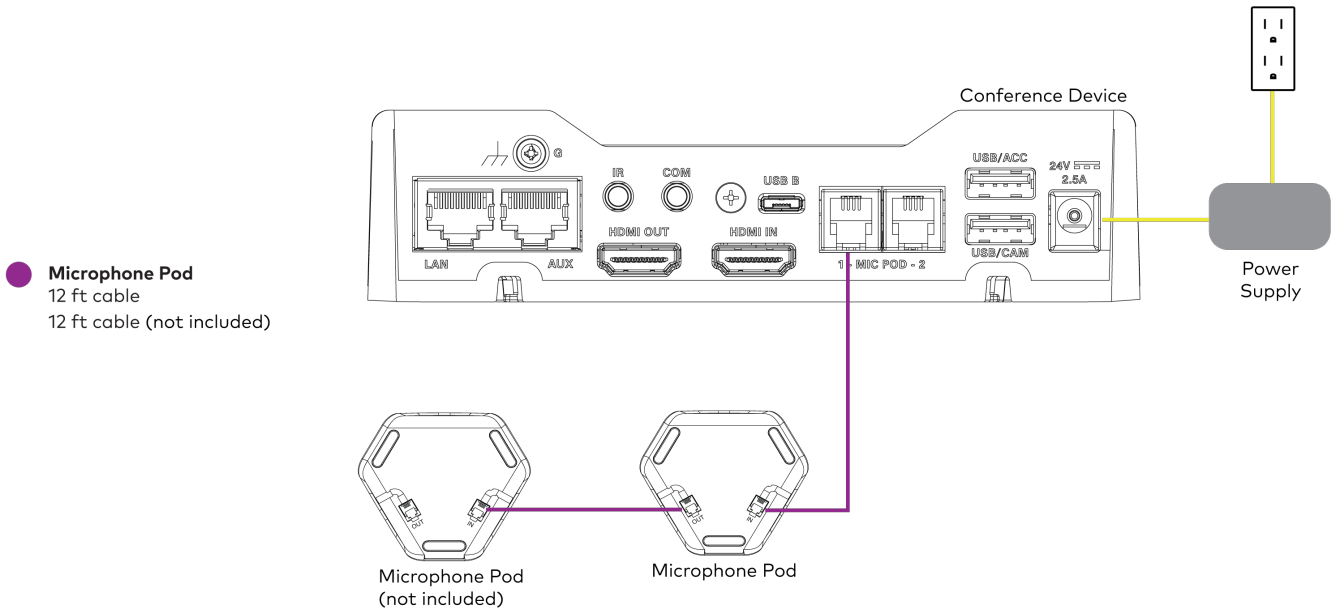

Operation

To operate the mic pod after making the system connections:

1. Turn on the conference device to supply power to the mic pod.
2. On the top of the mic pod, tap the button with the bi-color status LED to mute or unmute the mic pod.
   The status LED lights red to indicate that the mic pod is muted and lights green when unmuted.

   > **NOTE:** Tapping the mic pod button will also mute or unmute the conference device and second connected mic pod (not included).

CCS-UCA-SMK

The CCS-UCA-SMK is a low-profile swivel mount accessory for the Crestron Mercury® Tabletop Conference System (model CCS-UC-1). It provides a means for permanently mounting the device to a tabletop surface while retaining the ability to rotate it for optimal positioning.

The swivel range can be customized using optional limit screws, with a maximum of approximately 180-degree rotation allowed. The swivel mount may be installed on any flat, level surface with a thickness of 1 inch (25 mm) minimum to 1-3/8 inch (35 mm) maximum. Wiring is routed through the center of the swivel mount, passing beneath the mounting surface for a completely hidden appearance.



Installing CCS-UCA-SMK

To secure the Crestron Mercury® tabletop conference system on a table using the CCS-UCA-SMK swivel mount kit, refer to DO Guide for: CCS-UCA-SMK.

UC-CAMA-ADPT-ENET-USB

The UC-CAMA-ADPT-ENET-USB is a plug and play USB adapter used to connect the UC-CAM-L1 to a meeting room device. It supports easy camera installation by using a single Ethernet cable to enable flexible BYOD setups.

With its plug and play format, the adapter enables the camera to perform as a USB Video Class (UVC) device that is compatible with various software applications such as Microsoft Teams®, Zoom®, and Google Meet™.



Key Features

- Supports the Huddly® L1™ AI collaboration camera in flexible BYOD setups
- USB plug and play support
- USB Video Class (UVC) support
- PoE output to power a connected camera

Specifications

Connectivity

Connector	RJ-45
USB	USB Type-C® port
Power	Requires external 5V 3A power using the included external AC/DC 5V 4A power adapter

Construction

Material	Aluminum

Dimensions

Height	1.1 in. (27 mm)
Width	3.2 in. (82 mm)
Depth	3.2 in. (82 mm)

Weight

0.4 lb (0.2 Kg)

UCA-PWE-UC-2/UC-P8/P10

The UCA-PWE-UC-2/UC-P8/P10 is a Power over Ethernet (PoE) power source for optional use with Crestron® UC-2, UC-P8, and UC-P10 series devices in environments where a PoE infrastructure is not available.

The UCA-PWE-UC-2/UC-P8/P10 can be mounted at any convenient location up to 100 meters (328 feet) from the device.



Connecting UCA-PWE-UC-2/UC-P8/P10

In the Box

Qty.	Description
1	PoE injector (Output rating: 500 mA maximum @ 48VDC nominal) (6511770)

Connections

Make device connections as shown below.

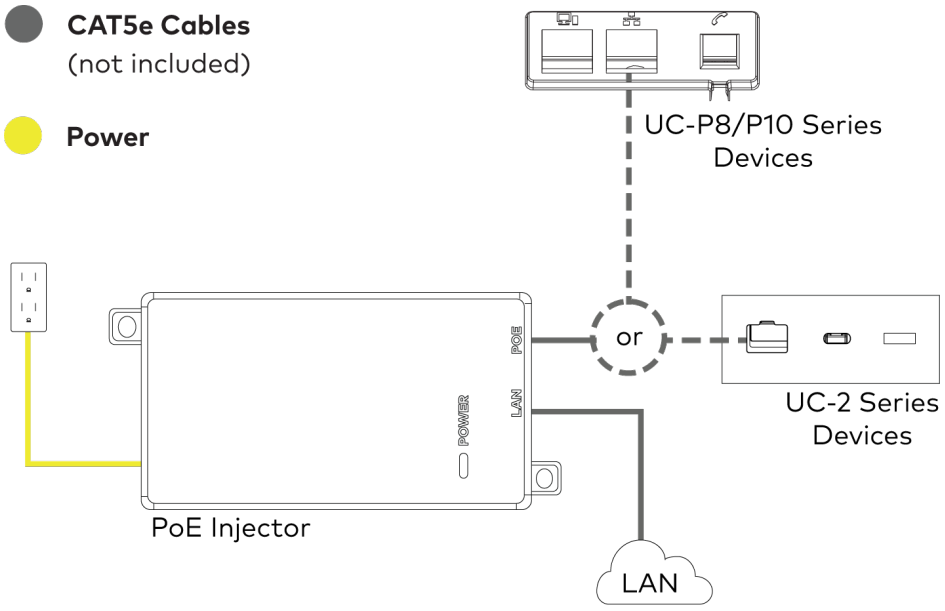

NOTES:

- The UCA-PWE-UC-2/UC-P8/P10 is for use with UC-2, UC-P8, and UC-P10 series devices only. Do not use it to power other PoE devices.
- Only one PoE enabled device at a time can be powered with the UCA-PWE-UC-2/UC-P8/P10.

UCA-RMK-1U

The Crestron® UCA-RMK-1U is a rack mount kit that allows a UC Engine bracket assembly to be installed into a 19 in. EIA equipment rack.

The UCA-RMK-1U occupies 2 units of rack space when attached to the UC Engine bracket assembly.





Installing UCA-RMK-1U

In the Box

Qty.	Description
1	Rack Ear, Left (2057927)
1	Rack Ear, Right (2057928)
4	Washer (2007671)
4	Nut (2004887)

Installation

To install the UC Engine bracket assembly into a 19 in. EIA equipment rack using the rack ears:

1. Place the left and right rack ears on a flat surface.
2. Position the four threaded studs of the left and right rack ears through the four holes in the UC Engine Bracket Assembly, as shown in Figure A.

3. Secure the rack ears to the bracket assembly using the included four washers and four nuts.

Figure A

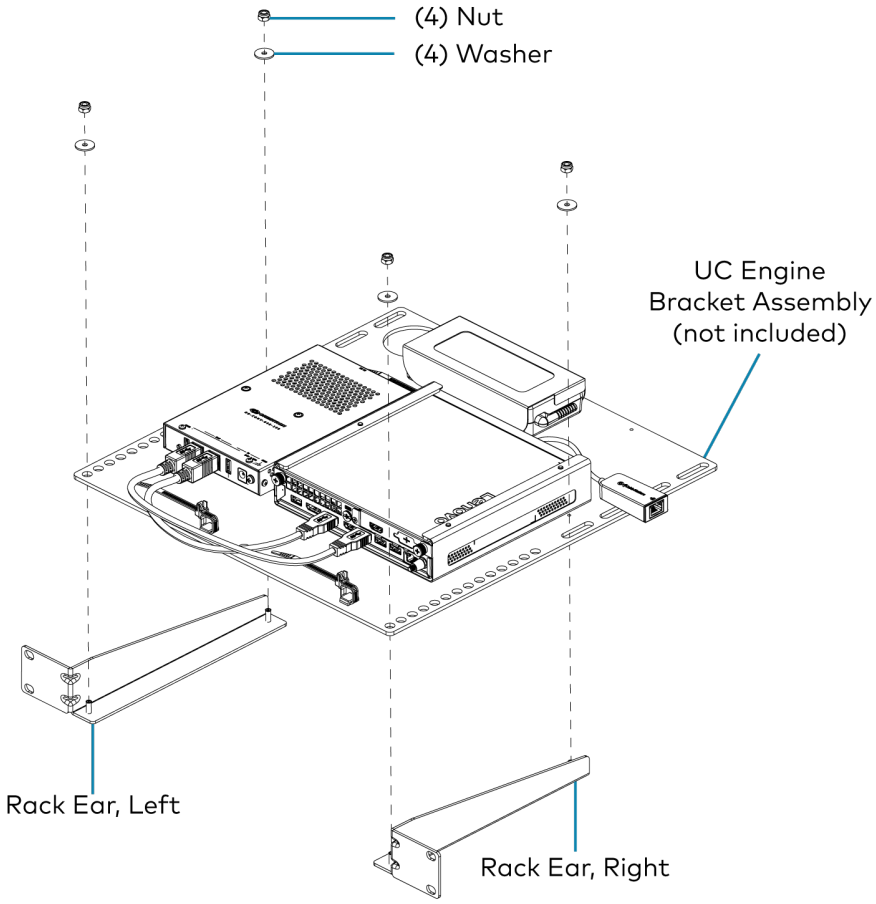

4. Mount the assembled UC Engine Bracket Assembly into the rack using four rack mounting screws (not included), as shown in Figure B.

Figure B

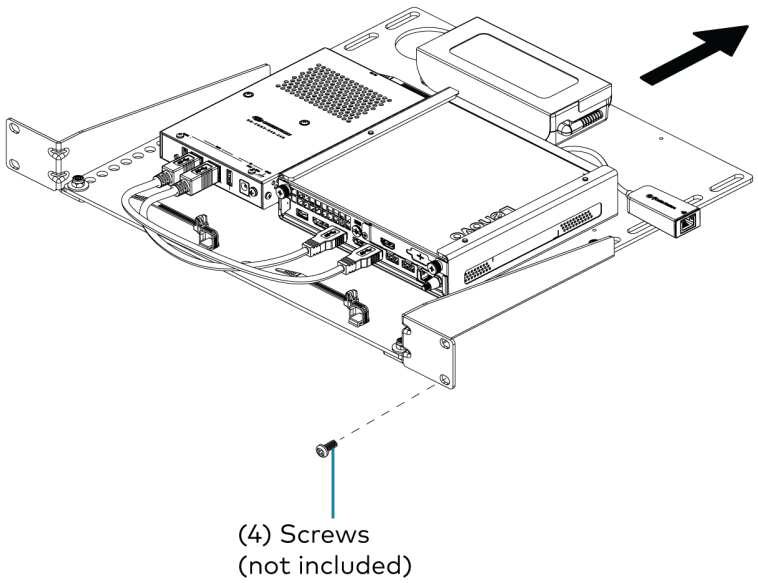

UCA-SMK-UC2 and UCA-SMKR-UC2-3

The Crestron UCA-SMK-UC2 and UCA-SMKR-UC2-3 are swivel mount accessories for Crestron Flex Tabletop Small Room Conference Systems. They enable tabletop conference device mounting with up to 170° rotation for optimal positioning. The UCA-SMK-UC2 is designed for mounting the UC-MM30 series tabletop conference device. The UCA-SMKR-UC2-3 is designed for the UC-MMX30 series tabletop conference device and has the following additional features:

- Retracts the installed USB-A to Micro USB-B cable, HDMI cable, and USB-C cable.
- Above the table, the USB-A, HDMI, and USB-C cables support Bring Your Own Device (BYOD) connectivity for the tabletop conference device.
- Below the table, the Micro USB-B, HDMI, and USB-C cables connect to the UC-PR which is included with the UC-MMX30.

UCA-SMK-UC2









Installing UCA-SMK-UC2 and UCA-SMKR-UC2-3

The UCA-SMK-UC2 and UCA-SMKR-UC2-3 have similar installation instructions. For simplicity within this guide, the term "swivel mount accessory" is used except where otherwise noted.

In the Box

Qty.	Description
1	UCA-SMK-UC2 or UCA-SMKR-UC2-3 Swivel Mount Accessory (6511567 or 6511362)
	Additional Items
1	Locking ring with screws (4519116)
1	Cutout Template (4532125)
1	Allen wrench, 3/32 in. (2036829)

UCA-SMK-UC2
Swivel Mount

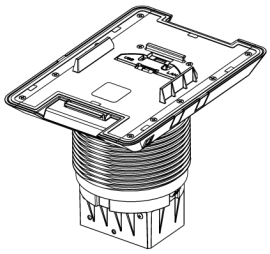

UCA-SMKR-UC2-3
Swivel Mount Cable Retractor

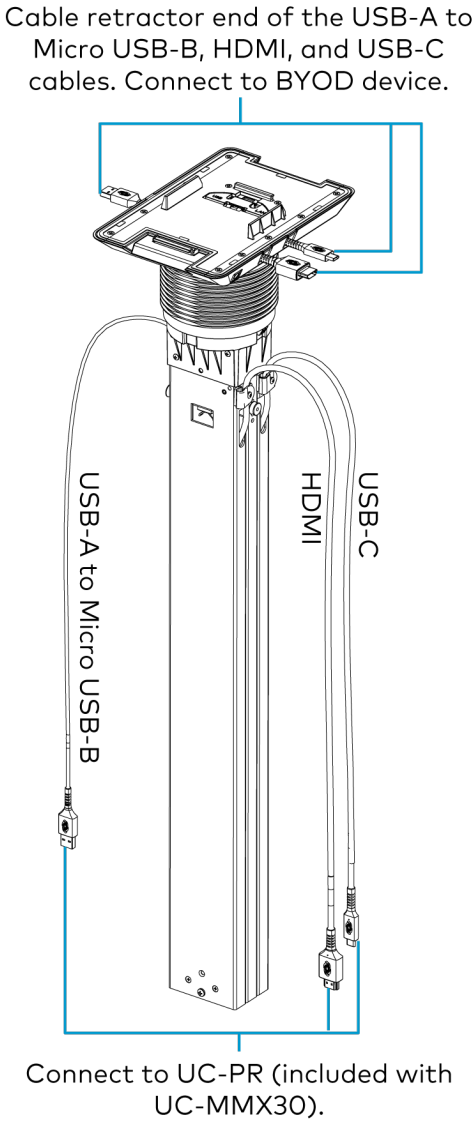

Install the Swivel Mount Accessory

Install the swivel mount accessory on any flat, level surface with a thickness of 1/2 in. (13 mm) minimum to 1-1/4 in. (32 mm) maximum. The LAN and USB cables for the UC-MM30 or UC-MMX30 tabletop conference device route through the cable cover of the swivel mount accessory, passing beneath the mounting surface for a completely hidden appearance. Refer to the Mount the Swivel Mount Accessory on page 649 section for more information.

UCA-SMK-UC2

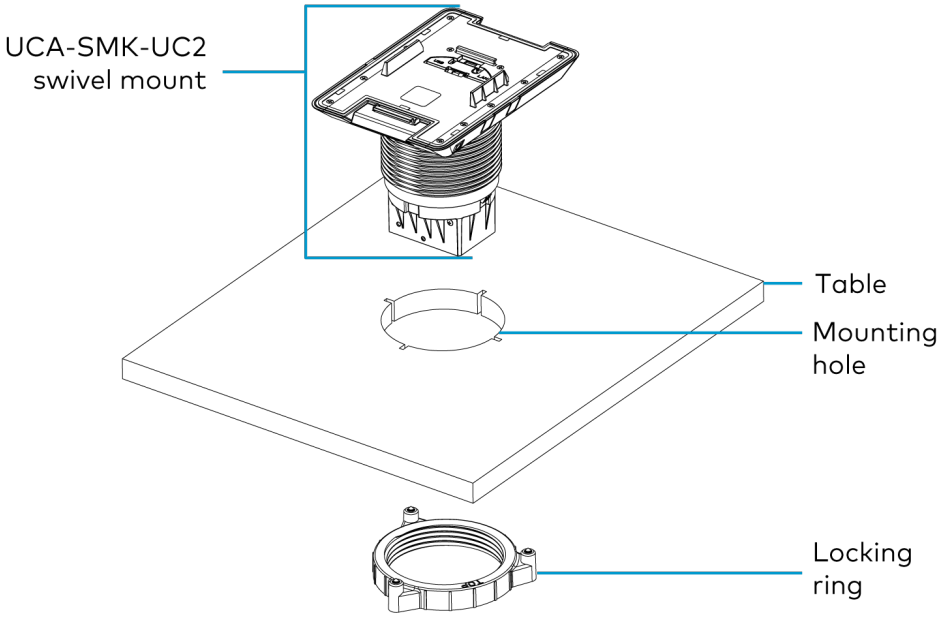

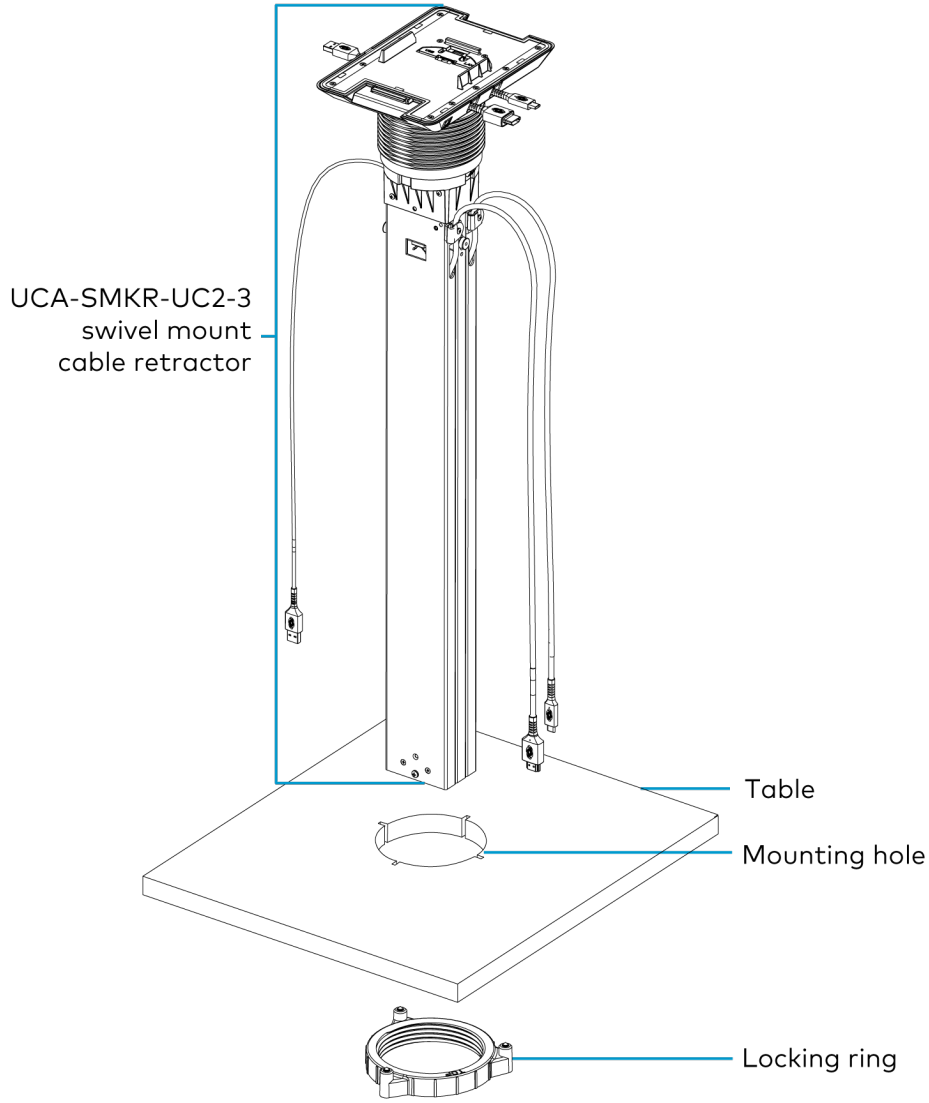

Mount the Swivel Mount Accessory

When determining the mounting location, consider where users will be seated and their proximity to the swivel mount accessory and the tabletop conferencing system. The mounting location must accommodate a 170° swivel range. Additionally, the UCA-SMKR-UC2-3 requires a 27.42 in. (696 mm) clearance for the cable retractor body below the table.

A 4 in. hole saw, a jigsaw, a 3/32 in. Allen wrench (included), and the cutout template (included) are required to mount the swivel mount accessory.

1. Secure the cutout template to the mounting location. The notch on the template and the swivel mount accessory indicates the front of the swivel mount accessory.

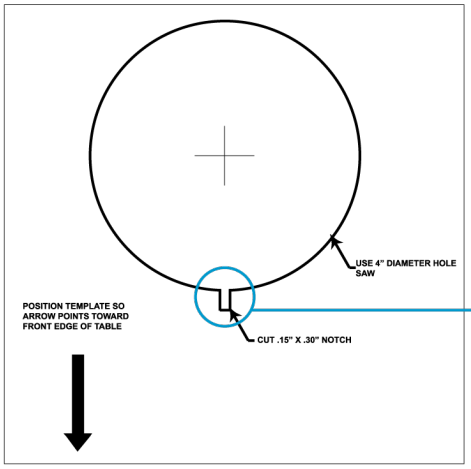

2. Use a hole saw (not included) to drill a 4 in. hole in the table.
3. Use a jig saw (not included) to cut the front notch.
4. Insert the body of the swivel mount accessory into the mounting hole. Match the notch on the front of the swivel mount accessory with the notch in the table.
5. Beneath the table, twist the included locking ring onto the body of the swivel mount accessory.

NOTES:

- Make sure the surface of the locking ring labeled TOP faces the bottom of the table.

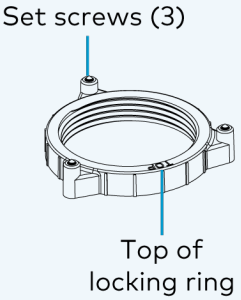

- Leave a 1/8 in. (4 mm) gap between the locking ring and the bottom of the table.

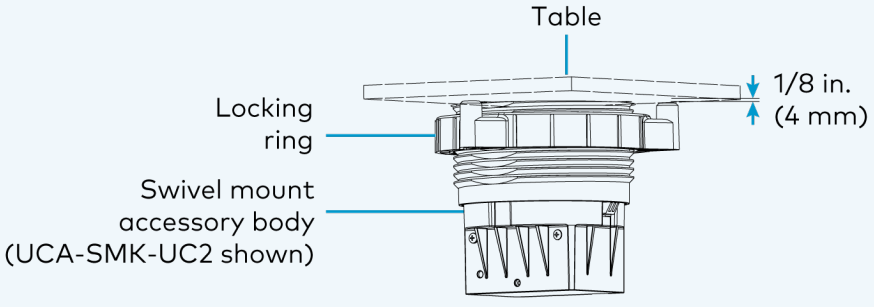

6. Secure the locking ring to the bottom of the table. Use a 3/32 in. Allen wrench (included) to tighten the three set screws included with the locking ring.

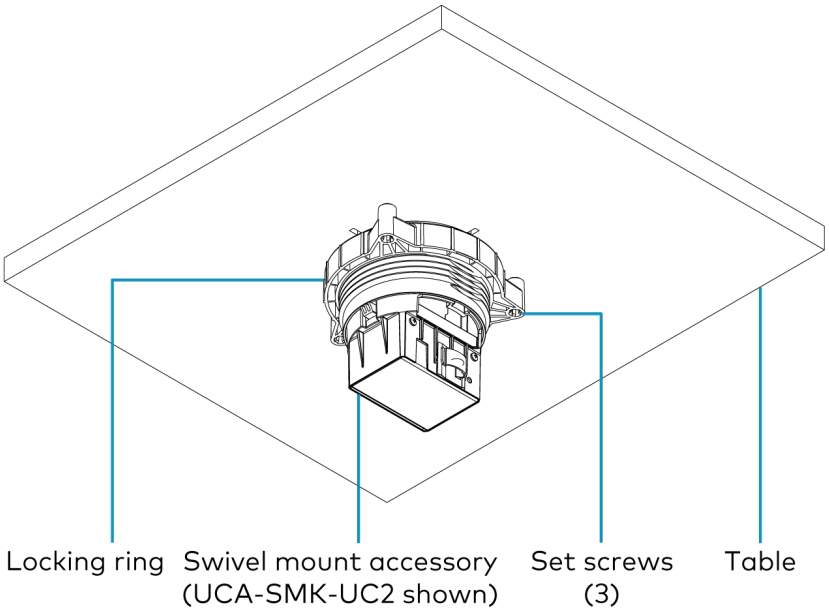

Connect and Dock the Tabletop Conference Device

Make the USB and LAN connections to the tabletop conference device before docking it to the swivel mount accessory, as the device blocks access to the cable cover pass-through holes. Once docked, continue making connections to the tabletop conference device.

To make the USB and LAN connections to the tabletop conference device:

1. Route the USB and LAN cables along the outside of the swivel mount body through cable cover pass-through holes.

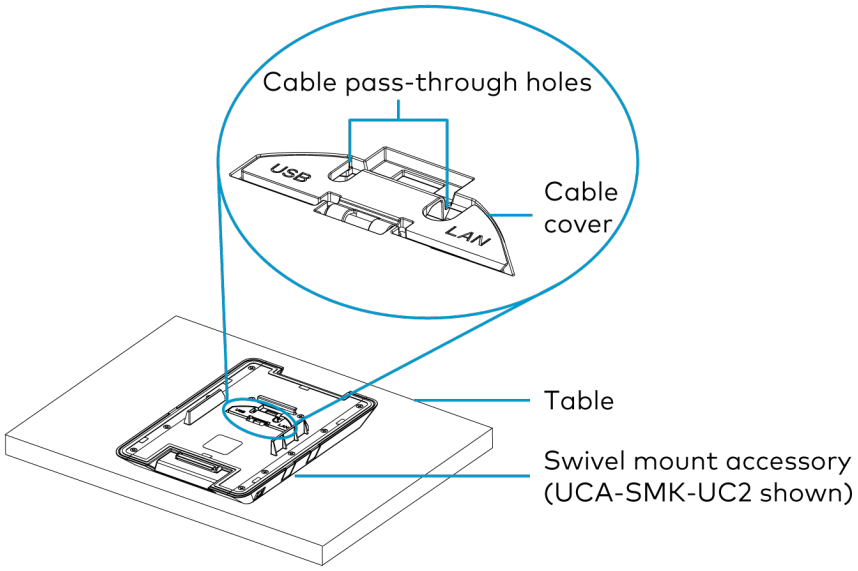

2. Connect the USB and LAN cables to the tabletop conference device.

3. Use the optional cable clamp to hold the USB and LAN cables in place.

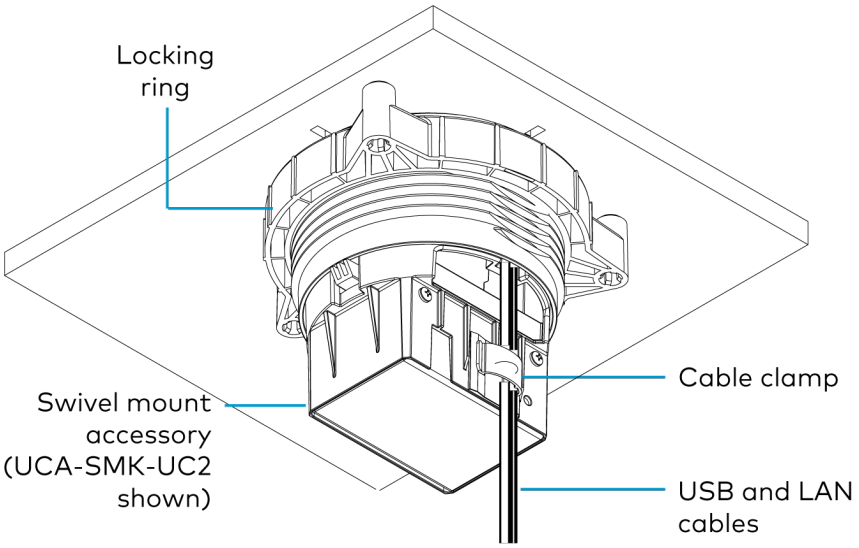

Dock the Tabletop Conference Device

Dock the tabletop conference device to the swivel mount accessory.

1. Position the tabletop conference device above the swivel mount surface.
2. Slide the tabletop conference device onto the swivel mount accessory, moving the device back to front. The device must engage with the latch at the back of the swivel mount accessory.
3. Gently press the tabletop conference device to engage it with the swivel mount accessory.

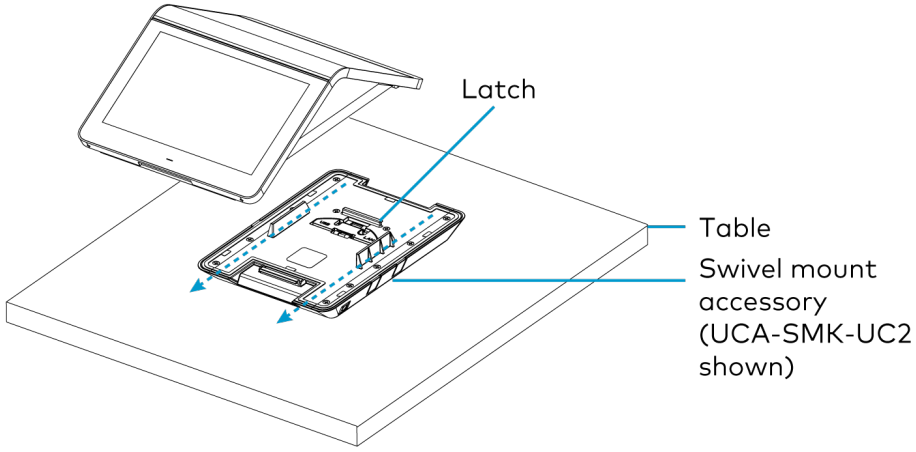

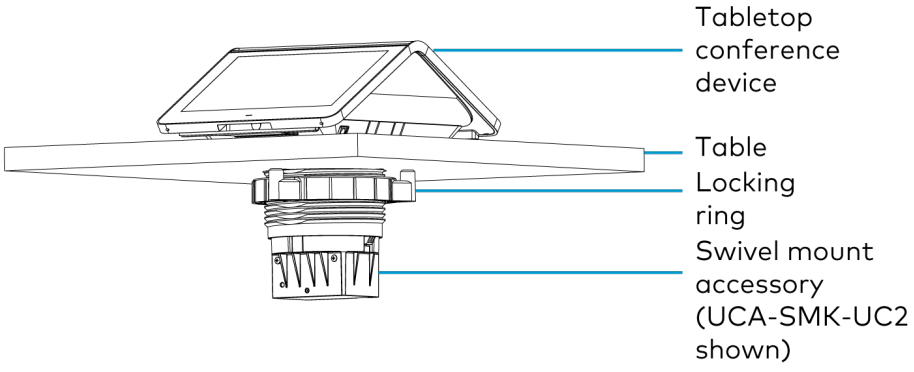

Continue Connecting the Tabletop Device

Connect the USB and LAN cables to the source devices.

For the UCA-SMKR-UC2-3, connect the BYOD and UC-PR connections.

UCA-SMKR-UC2-3

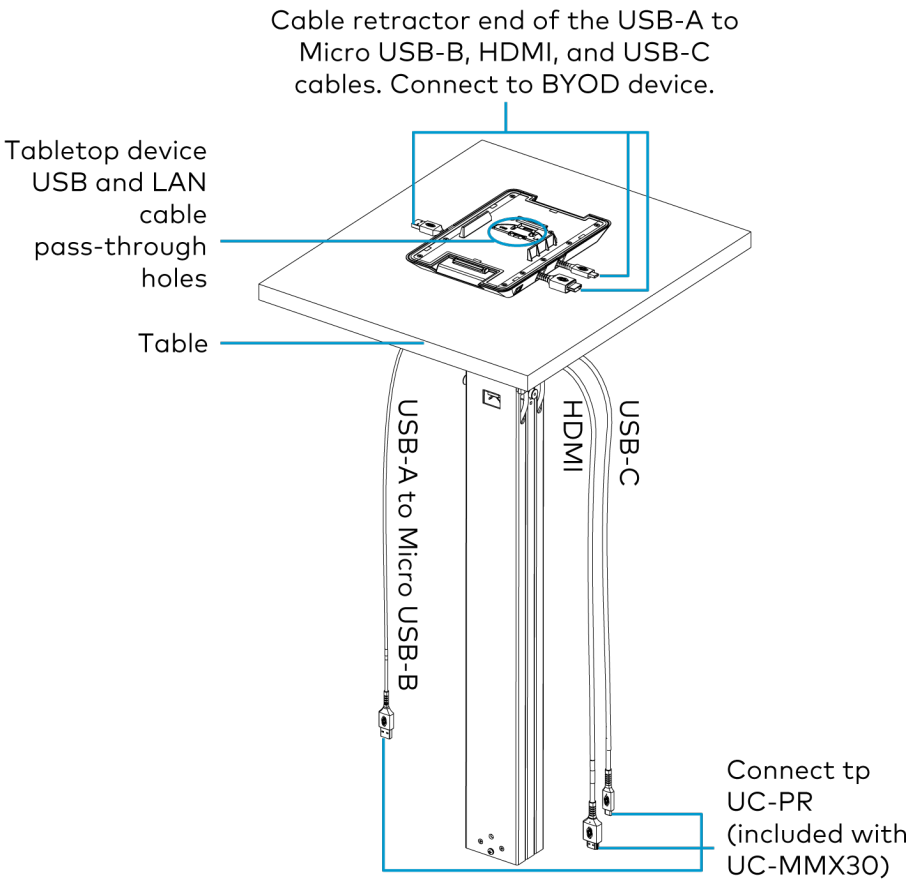

Lock the Tabletop Conference Device

To lock the tabletop conference device to the swivel mount accessory, locate the release button and the security screw. Use a 3/23 in. Allen wrench (included) to tighten the security screw. Ten clockwise revolutions locks the release button.

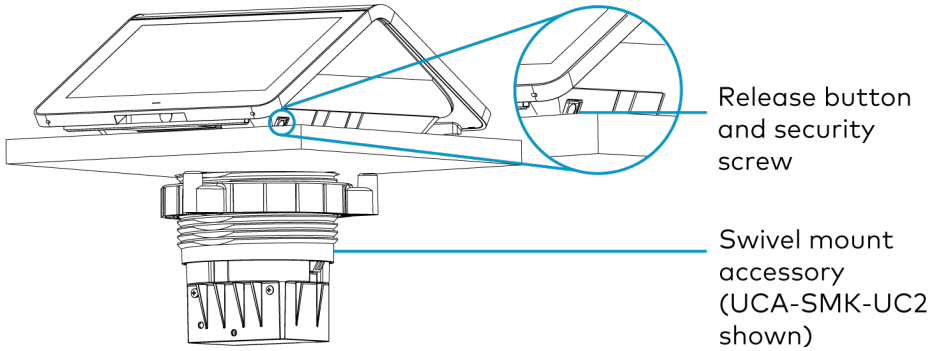

Unlock the Tabletop Conference Device

If the tabletop conference device is locked to the swivel mount accessory, locate the security screw and use a 3/32 in. Allen wrench to release the security screw. Ten counterclockwise revolutions unlocks the security screw. Press the release button to disengage the latch on the swivel mount accessory, and slide the tabletop conference device off of the swivel mount accessory.

UC-SB2-DMK

The UC-SB2-DMK is an optional display mounting kit for the Crestron Videobar 70. The kit is installed behind a VESA® compliant display device.



In the Box

Qty.	Description
1	Videobar Mounting Bracket, Metal (2062107)
2	Extension Bracket Rails, VESA, Metal (2062108)
2	Base Bracket Rails, VESA, Metal (2062109)
2	Tilt Bracket, Metal (2062110)
1	Screws & Spacers, Hardware Set (2062480)

Mount the UC-SB2-DMK

The UC-SB2-DMK is mounted between the back of a VESA complaint display device and the wall. Screws are supplied for the installation.

1. Place the base bracket rails to the VESA points behind the display device.

   NOTES:

   - If the VESA mounting holes on the back of the display device are already filled with other mounting screws, remove them and use the included screws to install the display mounting brackets.
   - The supplied hardware set includes four types of screws for base bracket rail and extension bracket rail installation: M6 X 40 mm (x4), M8 X 40 mm (x4), M6 X 50 mm (x4) and M8 X 50 mm (x4). Use the screw type applicable to the display device.
   - M3 x 6 mm (x2) and M6 x 12 mm (x6) screws are included for the tilt brackets and videobar mounting bracket installation.
   - M 5 x 16 mm (x2) screws are supplied with the Crestron Videobar 70.

2. Insert two screws through the L25. 4mm spacers to the top or bottom slots on the base bracket rails depending on top or bottom mounting and tighten them.

   NOTE: The base bracket rails have slots without holes. Ensure the screws are secured to the top slot to prevent the base bracket rails from sliding.

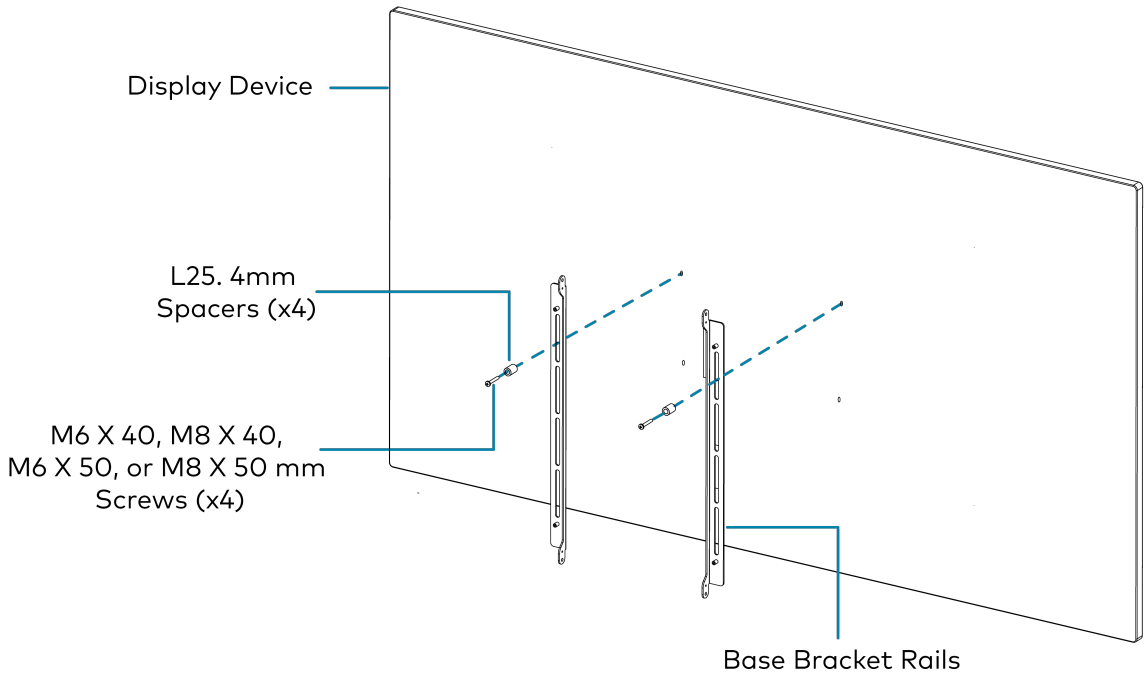

3. Place the extension bracket rails on the base bracket rails to adjust the top or bottom mounting.

4. Insert two screws through the L25. 4mm spacers, and two M8 nuts through the M8 washers into the holes of the extension bracket rails to the slots of the base bracket rails and tighten them.

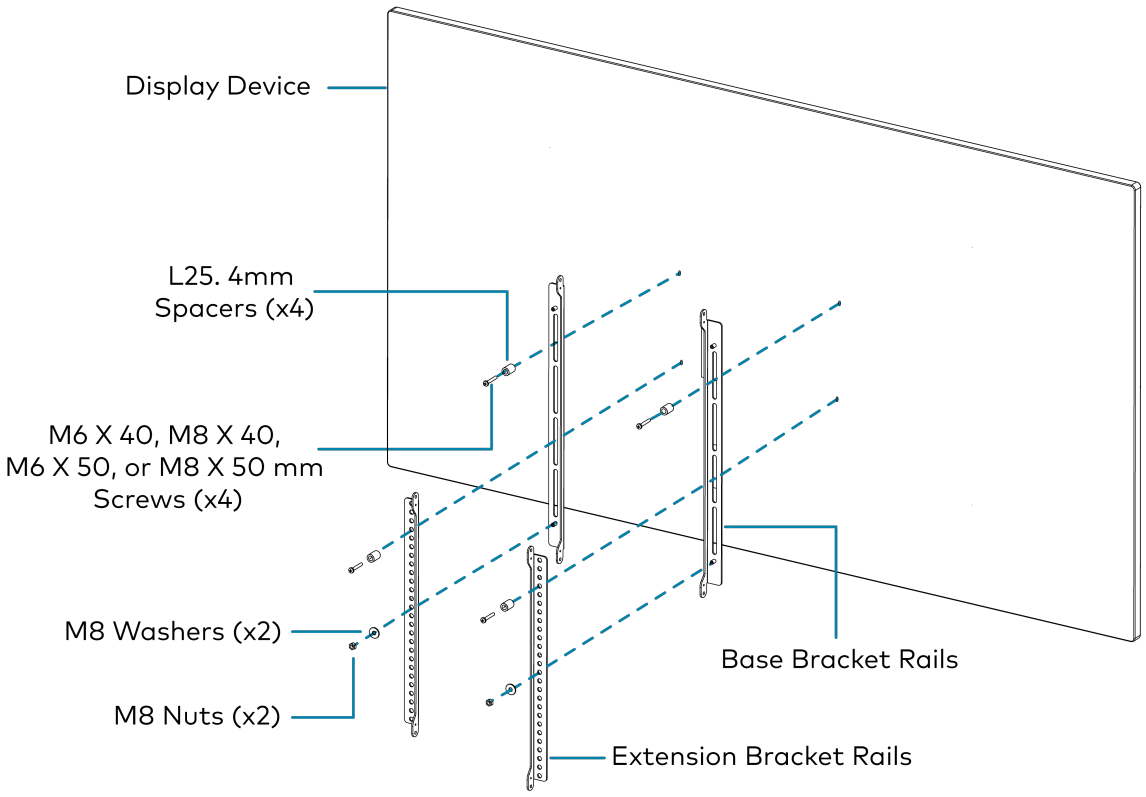

Bottom Mounting of UC-SB2-DMK

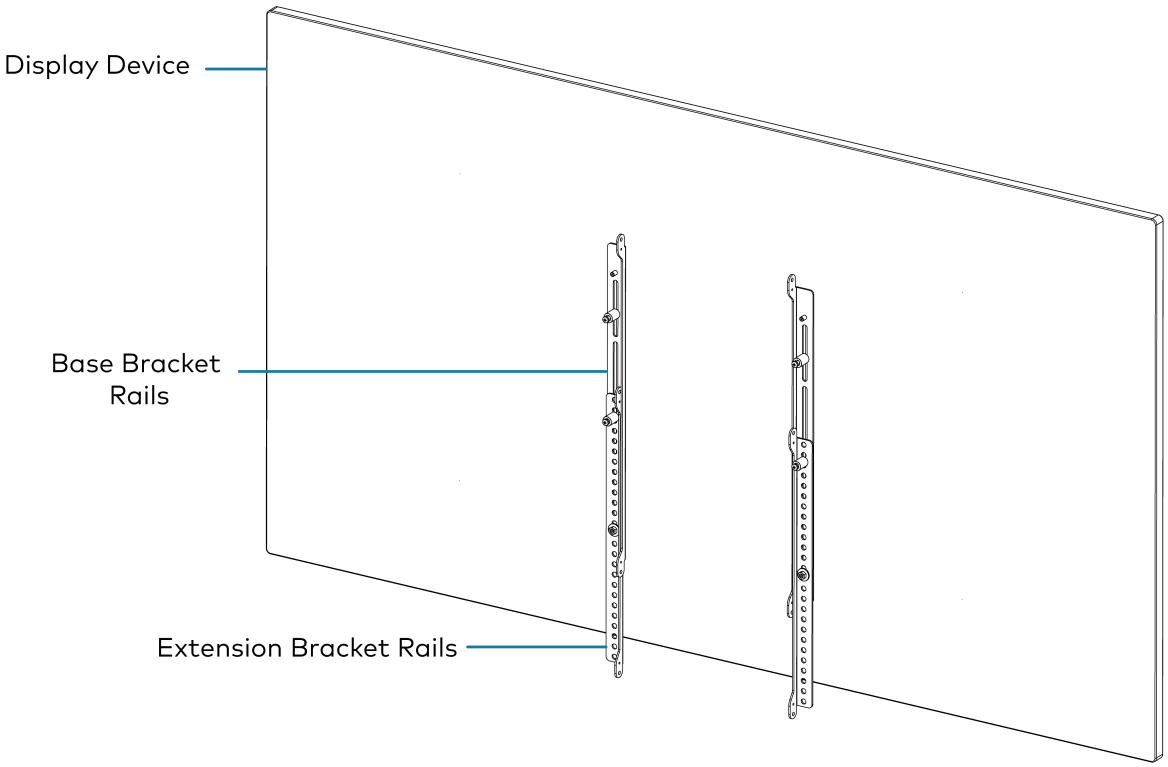

Top Mounting of UC-SB2-DMK

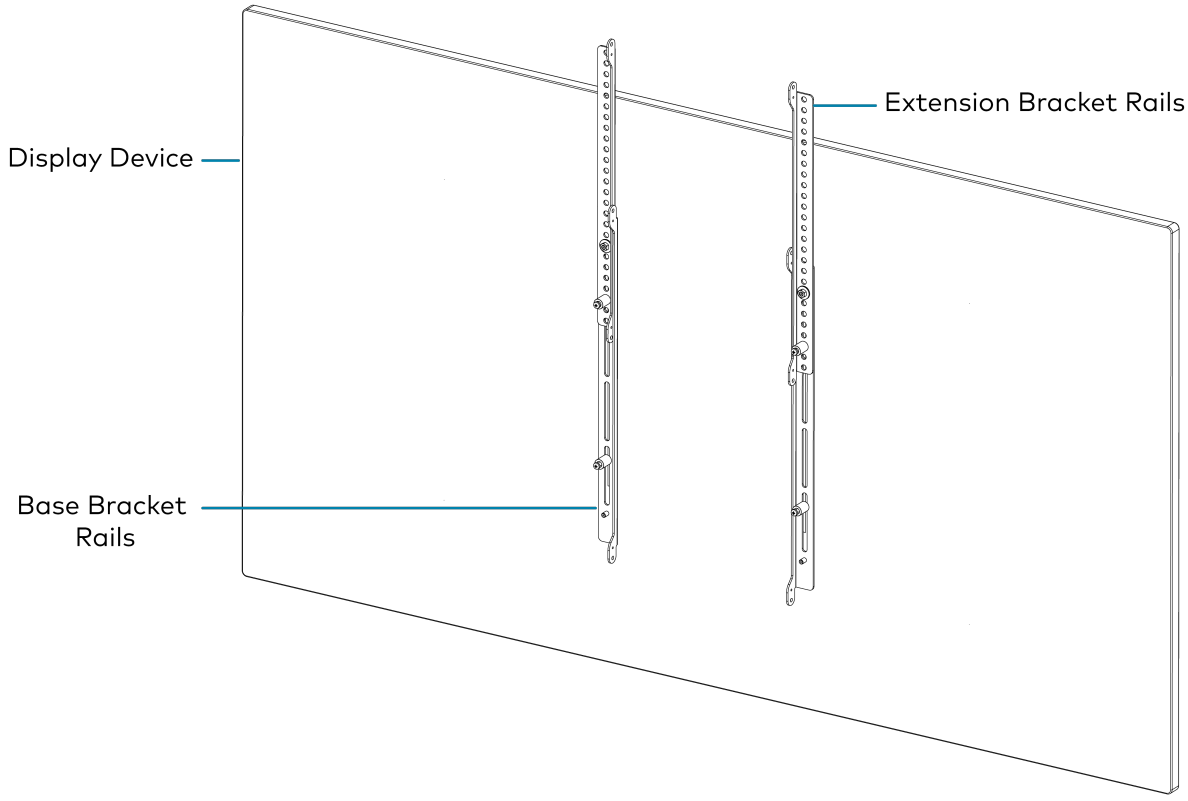

5. Place the tilt brackets on the edges of both sides of the extension bracket rails.

6. Insert the M6 X 12 mm and M3 X 6 mm screws through the holes on both sides of the extension bracket rails to the tilt brackets and tighten them.

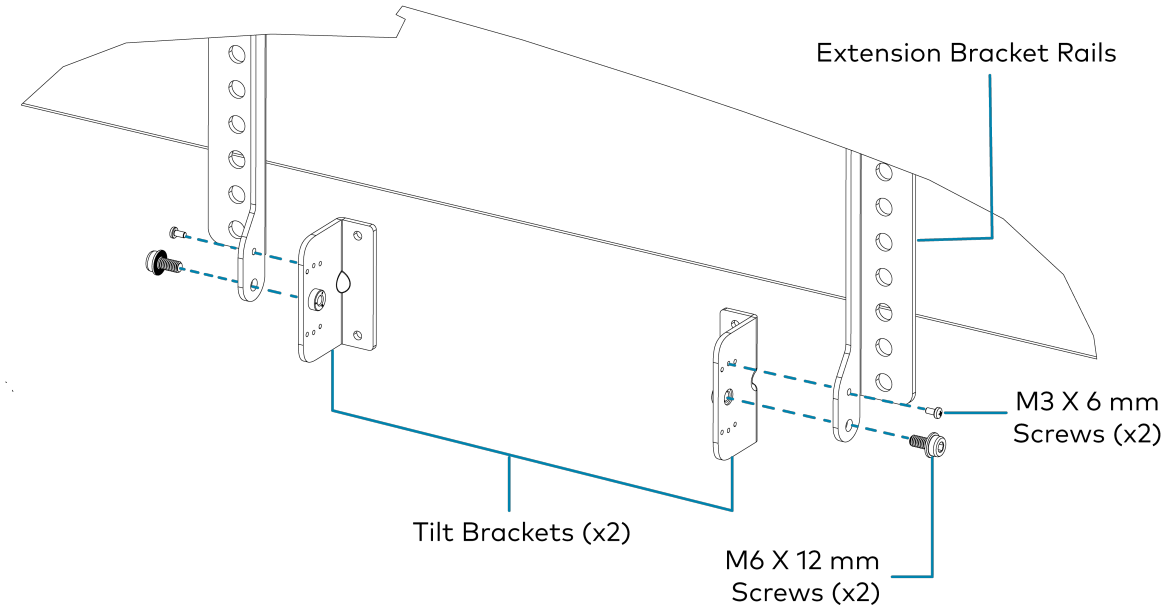

7. Insert the M6 X 12 mm screws through the respective holes on both sides of the videobar mounting bracket to the tilt brackets and tighten them.

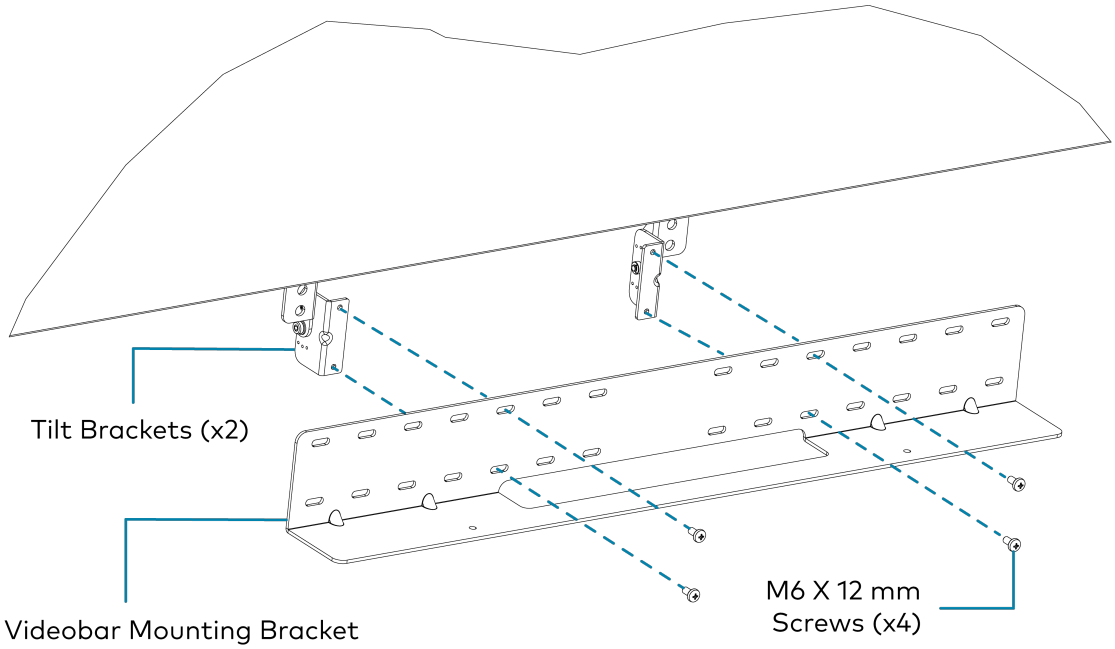

8. Place the videobar on the videobar mounting bracket.

9. Insert the M5 X 16 mm screws from below the videobar mounting bracket to the respective holes on the bottom of the videobar and tighten them.

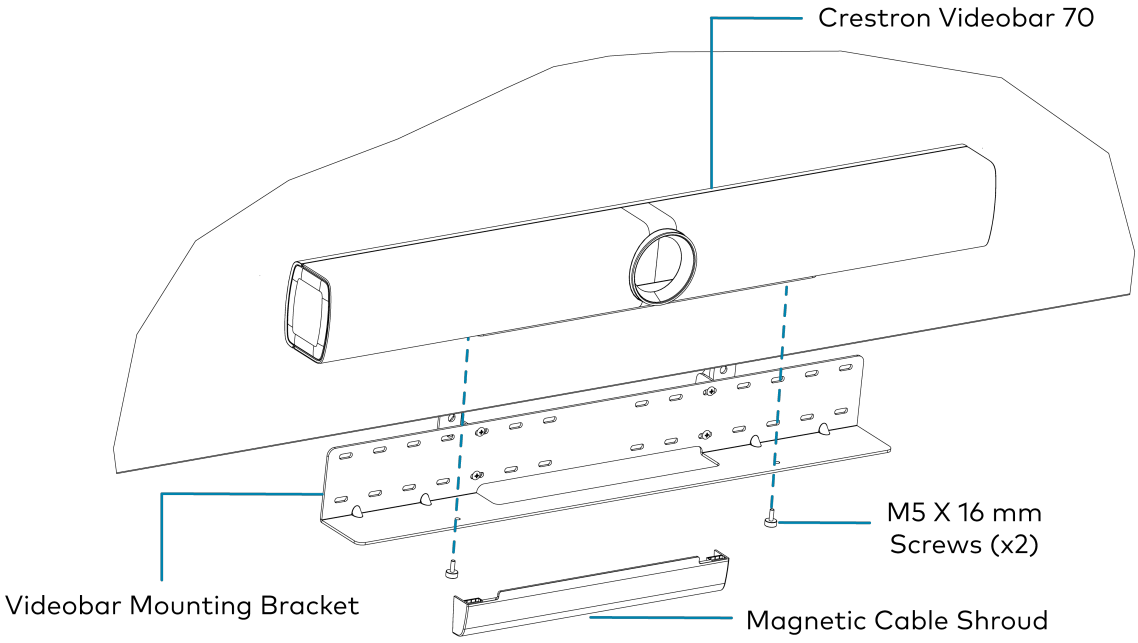

10. Attach the magnetic cable shroud to the videobar.

The videobar is now installed.

Top Mounting of UC-SB2-DMK with Crestron Videobar 70

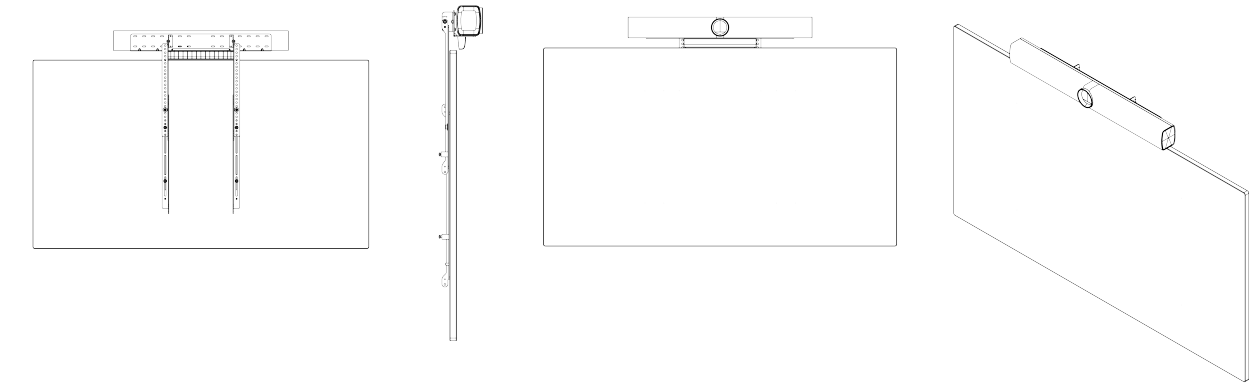

Bottom Mounting of UC-SB2-DMK with Crestron Videobar 70

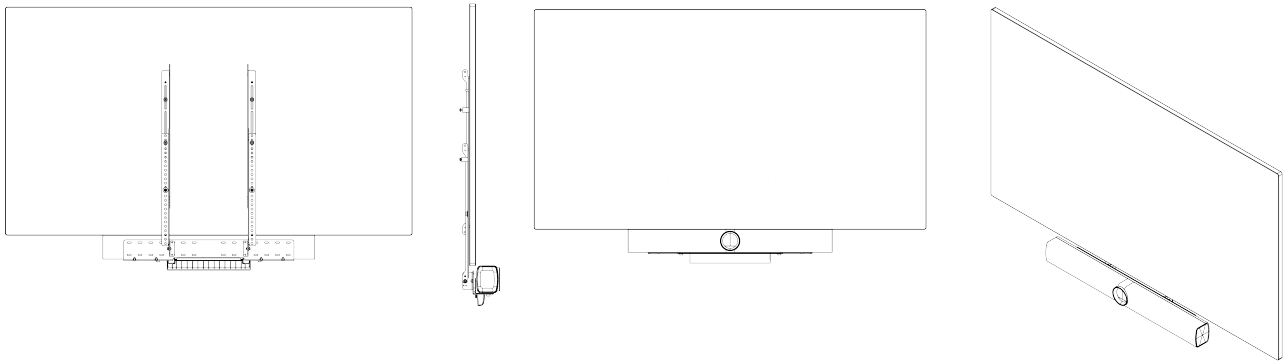

Install the UC-SB2-DMK with a Wall Mount Bracket (Not Included)

The UC-SB2-DMK can also be installed behind a VESA compliant display device with a wall mount bracket (not included).

1. Place the base bracket rails on the VESA points behind the display device.
2. Insert two screws through the L25. 4mm spacers to the top or bottom holes of the wall mount bracket and the top or bottom slots on the base bracket rails depending on top or bottom mounting and tighten them.
3. Place the extension bracket rails on the base bracket rails to adjust the top or bottom mounting.
4. Place the wall mount bracket on the extension bracket rails.

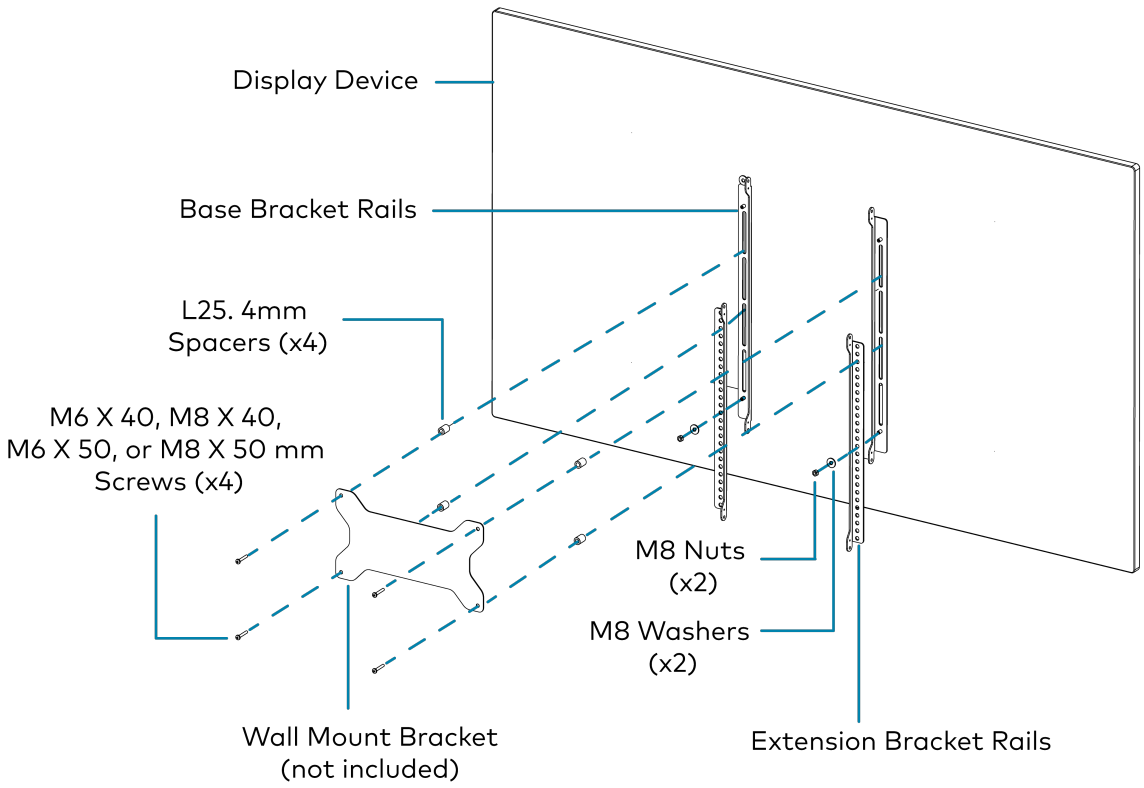

5. Insert two screws through the L25. 4mm spacers to the holes of the wall mount bracket to the extension bracket rails and the slots of the base bracket rails and tighten them.

6. Insert two M8 nuts through the M8 washers into the holes of the extension bracket rails to the slots of the base bracket rails and tighten them.

Bottom Mounting of UC-SB2-DMK with a Wall Mount Bracket

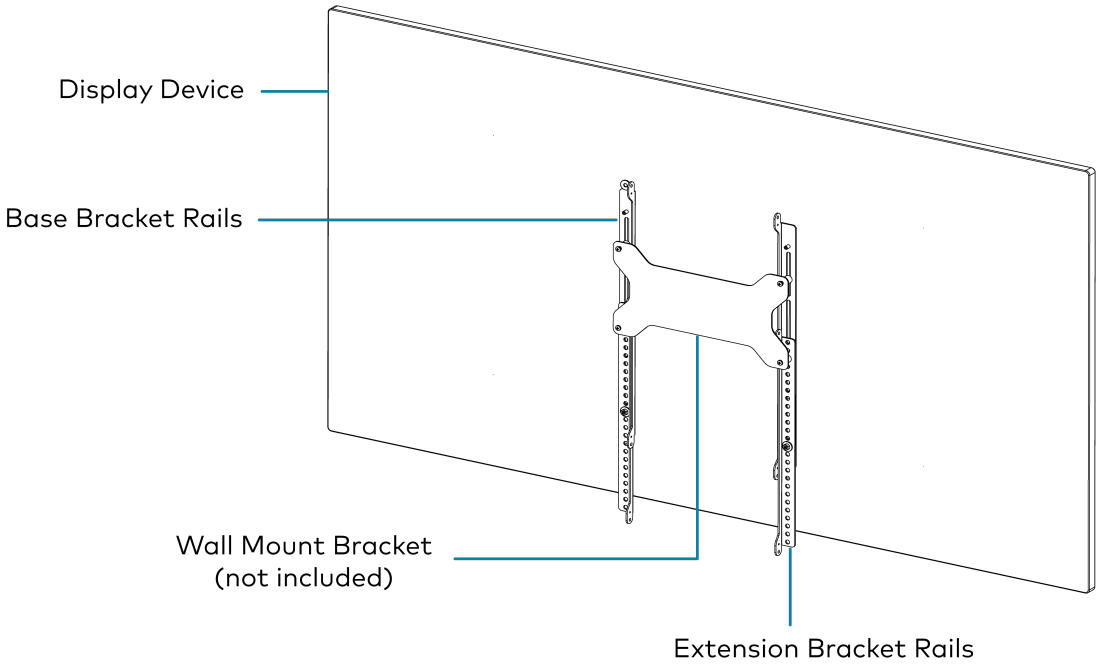

Top Mounting of UC-SB2-DMK with a Wall Mount Bracket

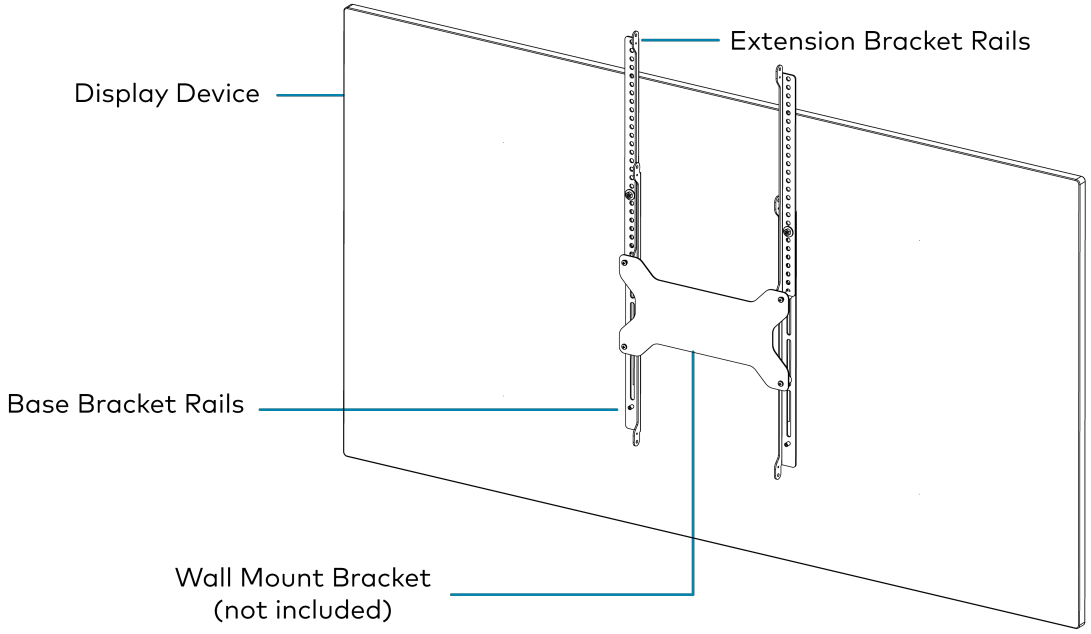

7. Place the tilt brackets on the edges of both sides of the extension bracket rails.

8. Insert the M6 X 12 mm and M3 X 6 mm screws through the holes on both sides of the extension bracket rails to the tilt brackets and tighten them.

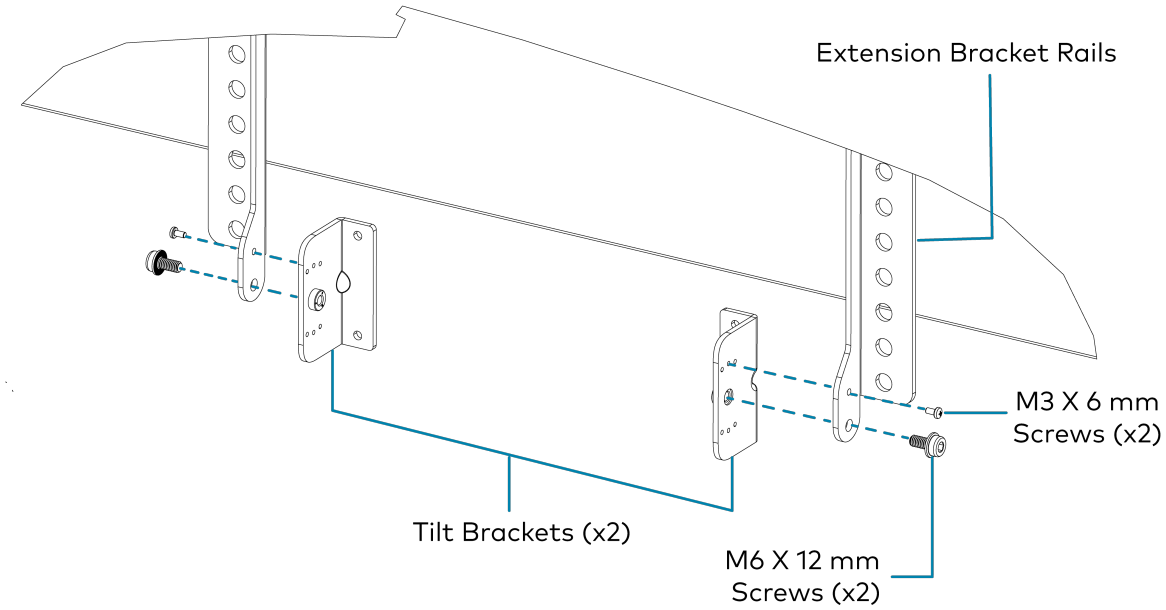

9. Place the videobar mounting bracket on the tilt brackets.
10. Insert the M6 X 12 mm screws through the respective holes on both sides of the videobar mounting bracket to the tilt brackets and tighten them.

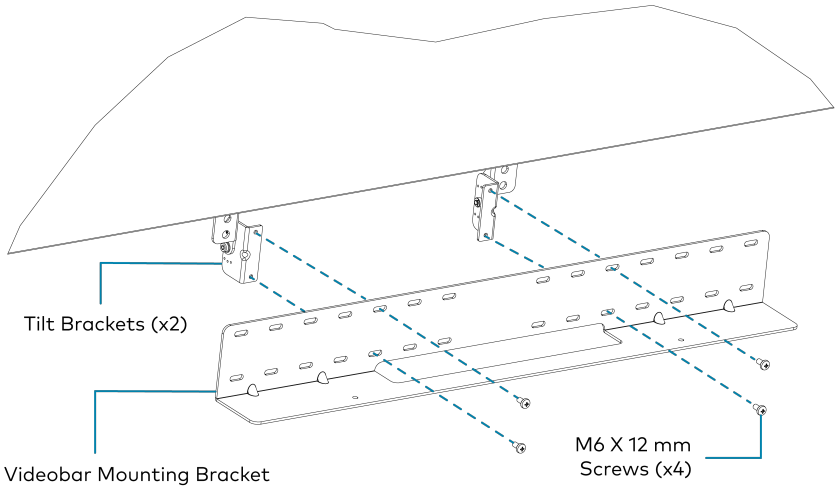

11. Follow the wall mount manufacturer's instructions to mount the display device to a wall.
12. Place the videobar on the videobar mounting bracket.

13. Insert the M5 X 16 mm screws from below the videobar mounting bracket to the respective holes on the bottom of the videobar and tighten them.

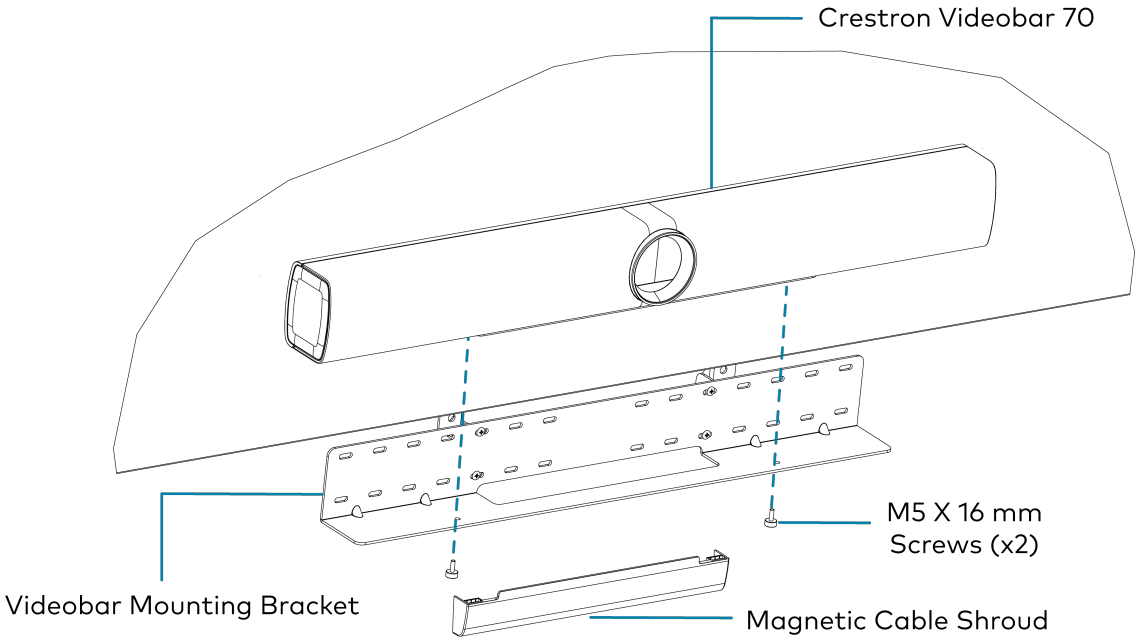

14. Attach the magnetic cable shroud to the videobar.

The videobar is now installed.

Top Mounting with Crestron Videobar 70

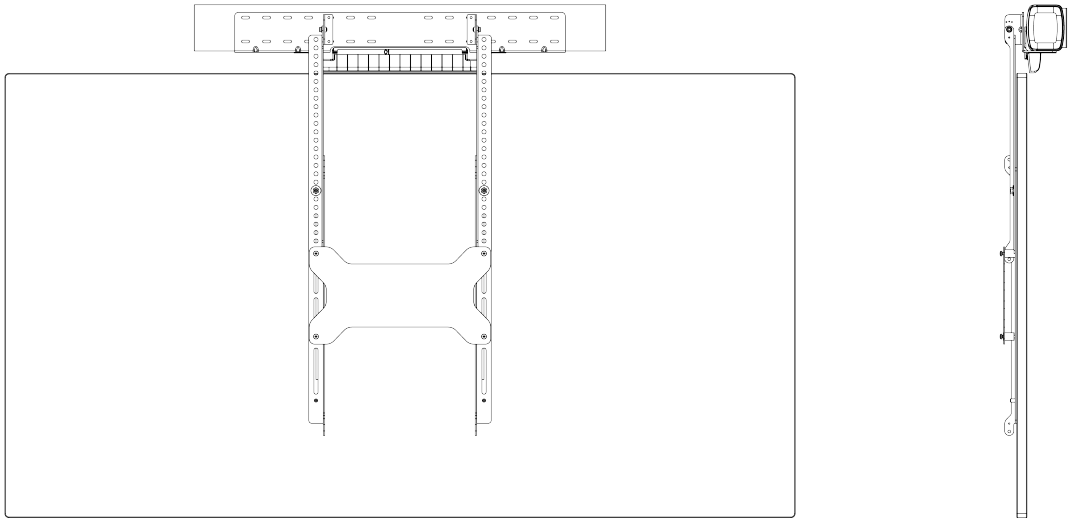

Bottom Mounting with Crestron Videobar 70

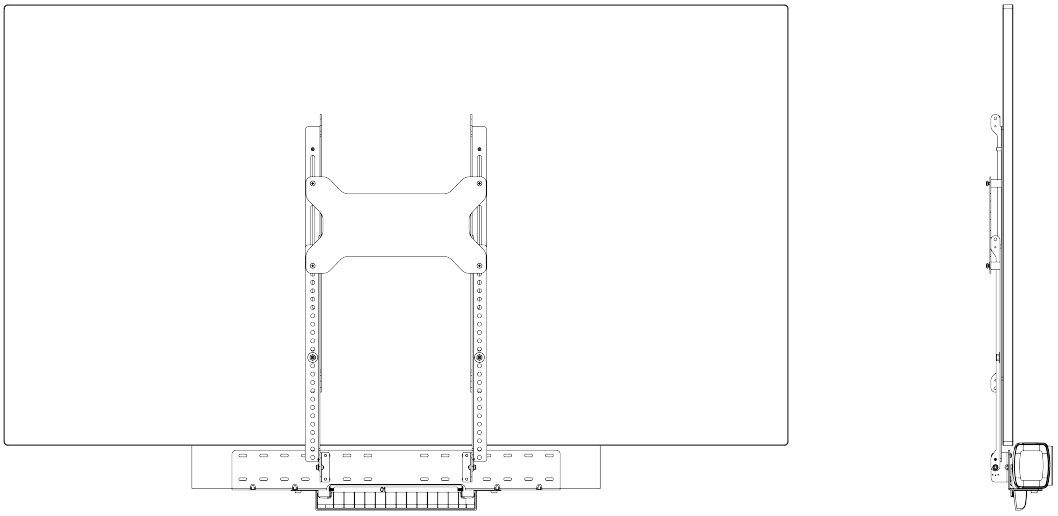

UC-SB2-TTK

The UC-SB2-TTK is an optional tabletop mounting bracket for the Crestron Videobar 70.

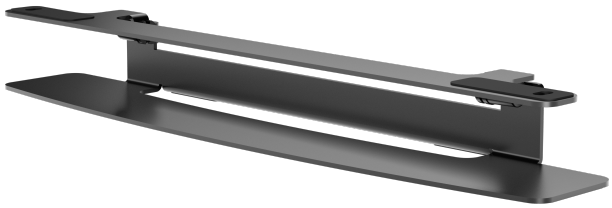



Install the Videobar 70 with UC-SB2-TTK

In the Box

Qty.	Description
1	UC-SB2-TTK, Tabletop Kit for Crestron Videobar 70

Installation

The UC-SB2-TTK can be installed on a flat surface. To install the kit:

1. Place the videobar on the upper deck of the bracket, aligning the screw holes on the bottom of the device with the holes on the bracket.
2. Insert both M5 X 16 mm screws (included with the videobar) from beneath the bracket and then through the holes on the bottom of the videobar.

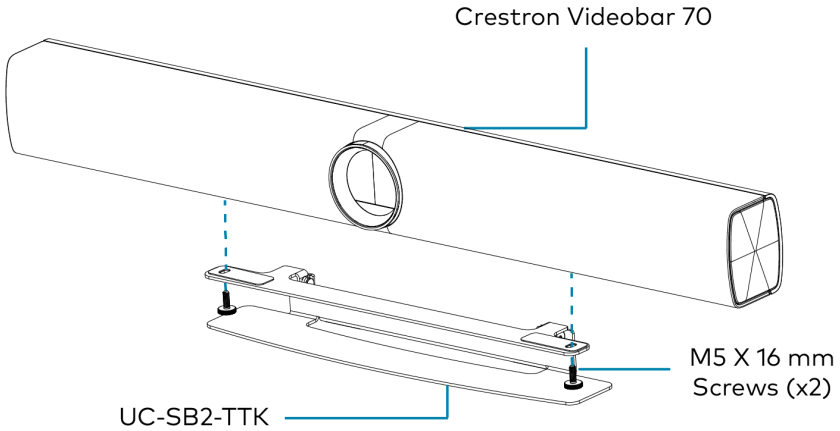

3. Tighten the screws to secure the videobar to the bracket.
4. Rotate the bracket down to route the cables (not included) behind the bracket and connect the cables to the videobar ports.

NOTE: The bracket is hinged to rotate the videobar up or down during installation or to adjust the camera angle.

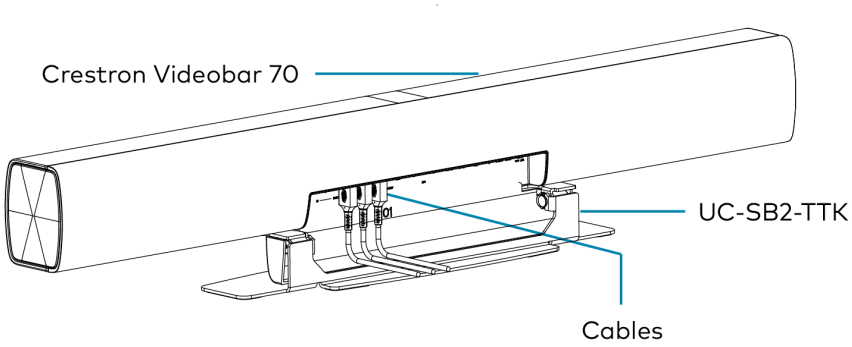

5. Attach the magnetic cable shroud to the bracket.

Figure B

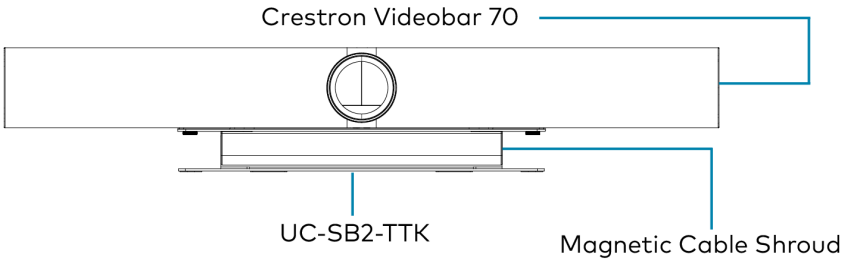

The videobar is now installed.

Crestron Flex Products (sold separately)

This section lists Crestron Flex products that are available to purchase separately. For pricing, detailed features, specifications, and other details, refer to the product pages of the selected Crestron Flex products.

- UC-AUDIO-HUB
- UC-AUDIO-POD
- UC-CAM-L1
- CCS-CAM-USB-F-400
- Mounting CCS-CAM-USB-F-400
- UC-SB1
- UC-SB1-CAM
- UC-SB-P50 and UC-SB-P50-INDIA

UC-AUDIO-HUB

The Crestron Flex UC-AUDIO-HUB is a wireless transceiver and auto mixer that connects with up to four paired Crestron Flex UC-AUDIO-POD devices through the Digital Enhanced Cordless Telecommunications (DECT™) technology. The hub receives audio from the pods' microphones, auto-mixes the audio, and transfers it to a UC Engine through a USB-C connection. The hub also distributes audio to all paired pods after receiving the audio from the UC Engine.



Installing UC-AUDIO-HUB

The hub can be mounted on a wall, DIN rail, or placed on any flat surface. For details, refer to Product Manual: UC-AUDIO-POD and UC-AUDIO-HUB.

UC-AUDIO-POD

The Crestron Flex UC-AUDIO-POD is a wireless tabletop conferencing device with a speaker and four microphones that is ideal for small to large rooms. The pod wirelessly connects and transfers audio to and from a paired Crestron Flex UC-AUDIO-HUB. The connected hub receives and sends audio to a UC Engine through a USB-C connection. Up to four pods can connect with the hub, providing omnidirectional sound in large or medium conference rooms and multi-purpose meeting spaces. The pod can be placed anywhere within a room or mounted on a table, depending upon the size and shape of the meeting space.



Installing UC-AUDIO-POD

The UC-AUDIO-POD can be placed on any flat surface or secured on a table using the UC-AUDIO-POD-TTMK tabletop mounting kit (sold separately). For details, refer to Product Manual: UC-AUDIO-POD and UC-AUDIO-HUB.

UC-CAM-L1

The UC-CAM-L1[1] is an intelligent, high-definition collaboration camera compatible with Crestron Flex large meeting room videoconferencing solutions. It features a wide-angle 103° diagonal field of view to capture an entire conference room with Full HD 1080p resolution. High precision aspherical optics, a 20.30 MP 1 in. CMOS sensor, portrait lighting, and advanced video processing ensure an immersive, crystal clear video image free from light or noise artifacts or optical aberrations. The camera has no moving parts, ensuring quiet operation, reliability, and accuracy while adjusting Pan, Tilt and Zoom functions.



Note:

1. The UC-CAM-L1 with network adapter requires driver installation on the connected laptop. A USB plug-and-play adapter, UC-CAMA-ADPT-ENET-USB, can be purchased separately to avoid driver installation.

Installing UC-CAM-L1

Mount the camera according to its included documentation.

CCS-CAM-USB-F-400

Compact in size, yet tremendous on performance, the Huddly IQ™ camera (sold as model CCS-CAM-USB-F-400) features an ultra wide-angle 150° diagonal field of view to capture an entire conference room with Full HD 1080p resolution. High precision aspherical optics, a 12 MP CMOS sensor, and advanced video processing ensure an immersive, crystal clear video image free from light or noise artifacts or optical aberrations. The camera has no moving parts, ensuring quiet operation, reliability, and accuracy.



Mounting CCS-CAM-USB-F-400

Mount the camera using the included UC-CAM-WMK wall mount kit.

The wall mount kit provides secure mounting options for CCS-CAM-USB-F-400. It comes with two mounting brackets and mounting hardware that allow for a variety of mounting locations.

In the Box (UC-CAM-WMK)

Qty.	Description
1	UC-CAM-WMK, Wall Mount Kit for CCS-CAM-USB-F-400 (6510998)
	Additional Items
2	Anchor, Wall, Plastic, #6 x 1-1/4 in. (2043585)
1	Bracket, Camera, 2.00 in. to 3.50 in. (51 mm to 89 mm) (2053562)
1	Bracket, Camera, 3.50 in. to 5.00 in. (89 mm to 127 mm) (2053561)
1	Screw, 1/4-20, 5/16 in., Flat Head, Phillips (2040253)
2	Screw, 6-AB x 1 in., Pan Head, Phillips, Black (2053606)
2	Tie Wrap, Releasable (2005430)

Installing the Wall Mount Kit

Select an appropriate mounting location and install the bracket.

Choose a Location

For optimal viewing results, the bracket should be mounted in a location that places the camera above the plane of the room's conference table.

Choose a Bracket

The wall mount kit comes with two brackets to accommodate a variety of mounting locations. The smaller bracket allows the back of the camera to be placed 2.00 in. to 3.50 in. (51 mm to 89 mm) off the wall while the larger bracket allows the back of the camera to be placed 3.50 in. to 5.00 in. (89 mm to 127 mm) off the wall.

NOTES:

- The camera can be mounted on top of or under the bracket.
- When using the CCS-CAM-USB-F-100, the smaller bracket allows the back of the camera to be placed 2.25 in. to 3.00 in. (57 mm to 76 mm) off the wall while the larger bracket allows the back of the camera to be placed 3.75 in. to 4.55 in. (95 mm to 116 mm) off the wall.

Small bracket, CCS-CAM-USB-F-400 camera shown

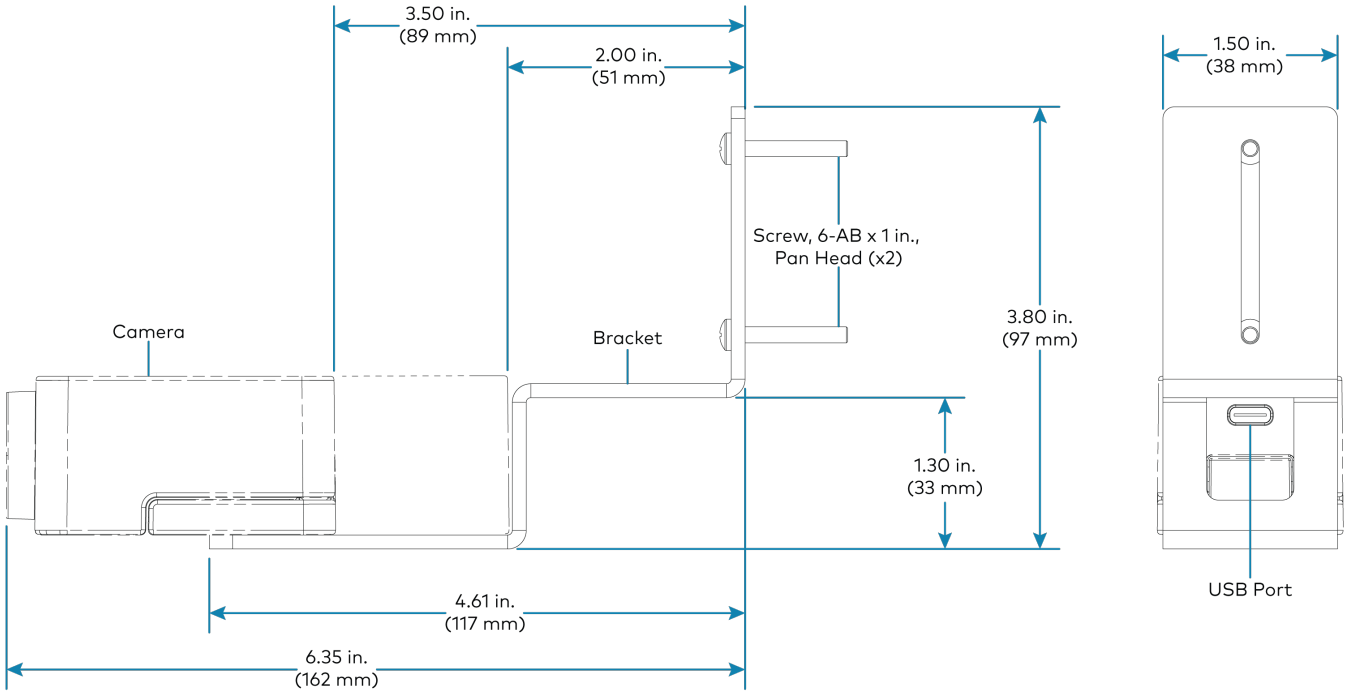

Large bracket, CCS-CAM-USB-F-400 camera shown

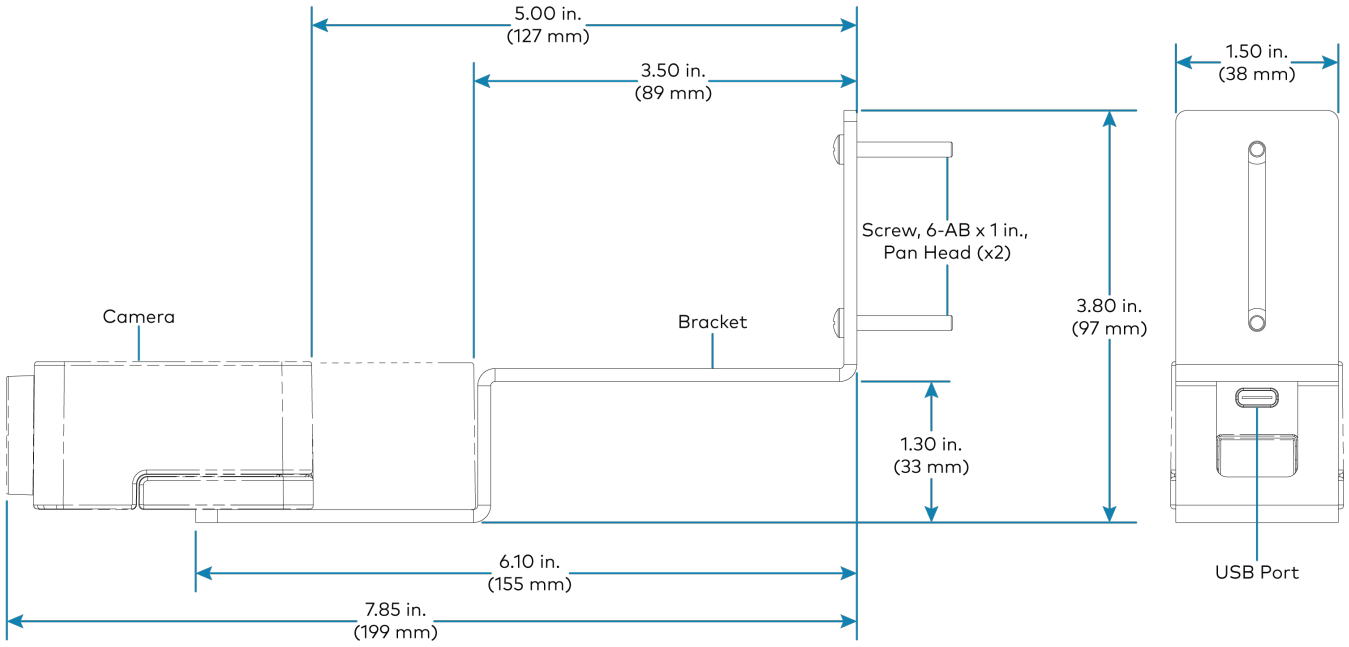

Secure the Bracket

Secure the bracket to the mounting surface with the included 6-AB x 1 in. pan head screws. Use the included anchors for mounting locations where a stud cannot be found.

Secure the bracket (large bracket shown)

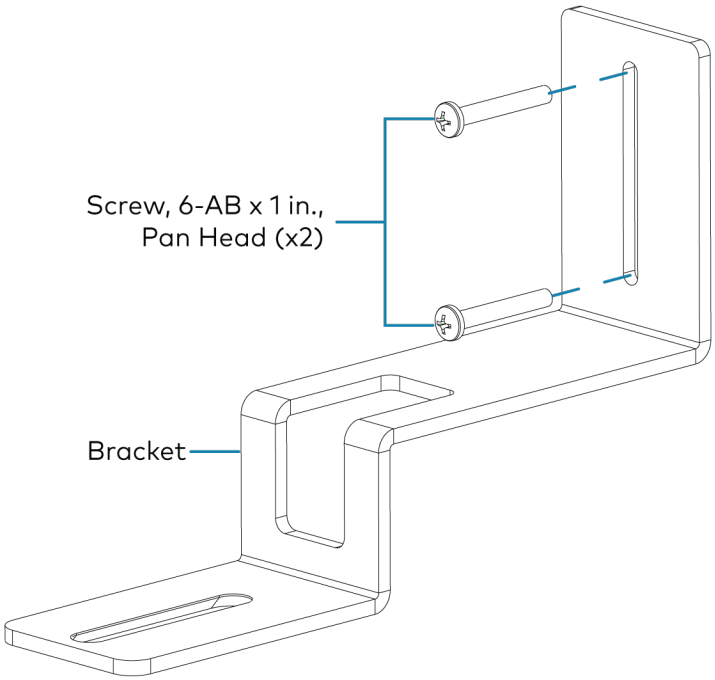

Attach the Camera

Attach the camera to the bracket with the included 1/4-20, 5/16 in. flat head screw. The camera can be positioned forward and back along the bracket.

Attach the camera (large bracket with CCS-CAM-USB-F-400 camera shown)

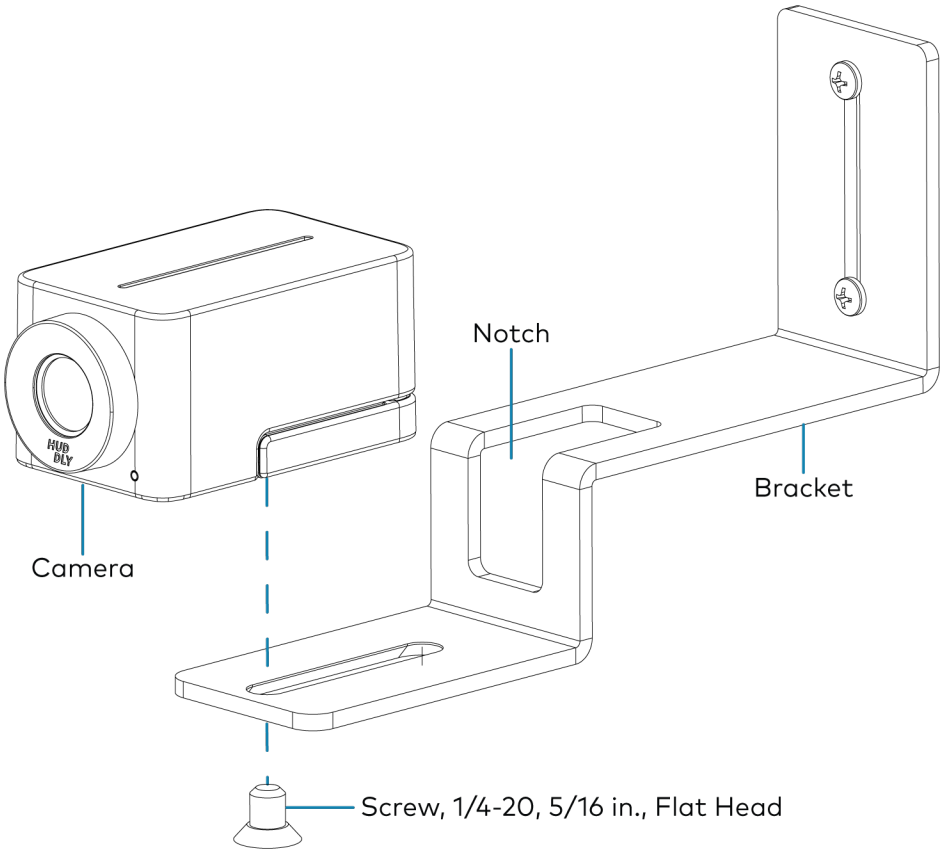

Connect

Thread the cable that is included with the camera through the notch in the bracket and connect it to the camera's USB port and a USB device. Use the included tie wraps to secure excess cable.

> **NOTE:** On the CCS-CAM-USB-F-100, the cable is attached to the camera.

UC-SB1

The Crestron UC Video Conference Smart Soundbar (UC-SB1) is a front-of-room device that eliminates the need to install additional microphones or speakers in a conference space. Mounted on the wall or placed on a credenza beneath the room display, the smart soundbar looks great and sounds even better in a small to medium-sized meeting space.

High-powered stereo speakers, adaptive beamforming microphone, and advanced digital signal processing deliver exceptional full-duplex speakerphone performance with highly intelligible, echo-free voice clarity. A USB camera can be connected via a USB 3.0 port on the rear panel.

Mounting UC-SB1

In the Box

Qty.	Description
1	UC-SB1-CAM, UC Video Conference Smart Soundbar & Camera (6511280)
	Additional Items
4	Anchor, Drywall, Plastic, 3/8 in. x 1/2 in. (2052565)
1	Cable, USB 3.0, A - B, 6 ft (1.83 m) (2053077)
2	Foot, 2.3 in. x 0.96 in. x 0.15 in., Rubber (2052169)
1	Key, Anchor (4529654)
1	Power Cord, 5 ft 10 in. (1.78 m) (2042043)
1	Power Pack, 24 VDC, 2.5 A, 100-240 VAC (2045873)
4	Screw, 8-AB x 1-1/2 in., Pan Head, Combo (2052567)
1	Template, Overlay (4529513)

The soundbar can be placed on a flat surface or mounted on a wall. The soundbar has the following dimensions.

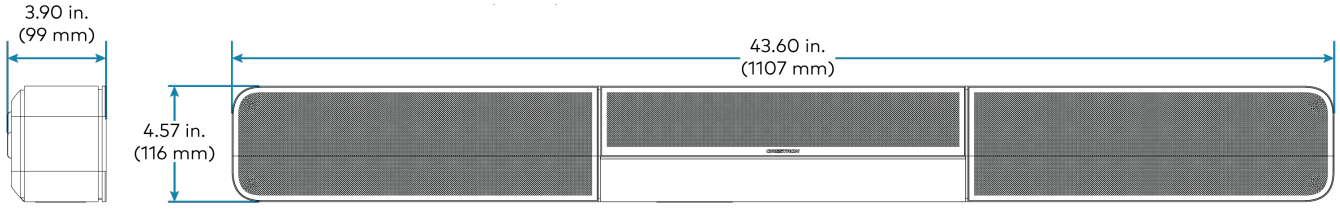

Place on a Flat Surface

If the soundbar is to be placed on a flat surface, attach the included rubber feet to the bottom of the soundbar as shown.

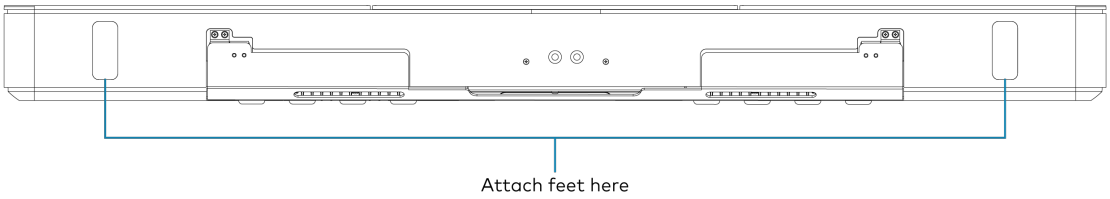

Mount on a Wall

The soundbar includes anchors that are suitable for mounting it on sheetrock walls up to 1/2 in. (13 mm) thickness. Masonry and other materials may require additional installer-supplied mounting hardware.

> **NOTE:** When mounting on a wall beneath a display device, leave 3/4 in. (minimum) clearance above the top of the soundbar. Use the included template to allow for sufficient clearance between the soundbar and display device.

The following tools are required to mount the soundbar:

- Drywall saw (not included)
- Drill with 5/16 in. bit (not included)

A template is included to provide drill hole locations for the included mounting hardware.

1. Attach the template to the desired mounting location with the template's center reference line at the center of the desired location.

   > **NOTE:** Use the center reference hole of the template as a guide to attach the template.

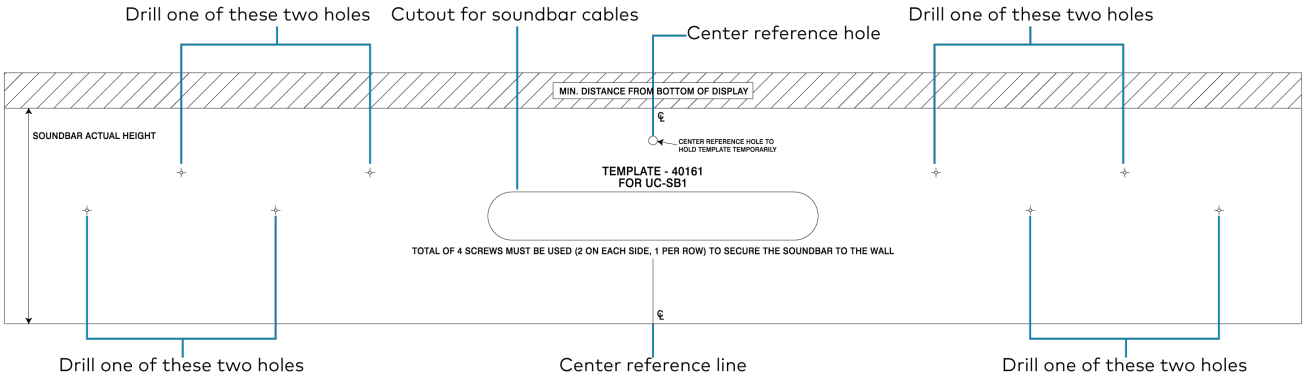

2. Drill two pilot holes on each side of the center reference line as shown in the previous diagram. Each side should have one pilot hole drilled in each row of the template.
3. Use a drywall saw to make a cutout in the wall for the soundbar cables. The cutout in the center of the template provides adequate access for all of the required cabling.
4. Install the four included anchors and screws into the drilled pilot holes.

5. Place the soundbar face down, and pivot the wall bracket away from the soundbar.

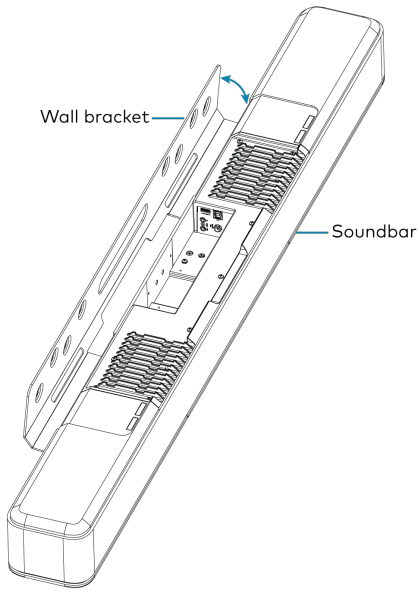

6. Place the wall bracket over the screws, and hand tighten the screws until the wall bracket is secured to the wall.

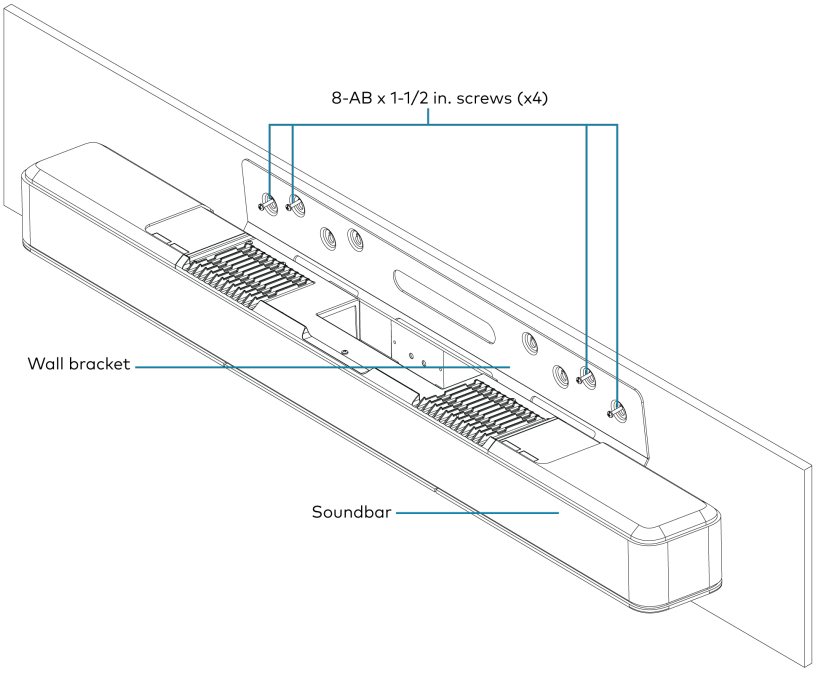

7. Route the cables through the cable cutout.

> **NOTE:** The included power pack's cord is typically routed from the wall opening, through the cable cutout, to the soundbar.

Connect

Make the necessary connections as called out in the following diagram. Connect power last. Once all connections are made, pivot the soundbar up to the wall bracket until the soundbar locks into place.

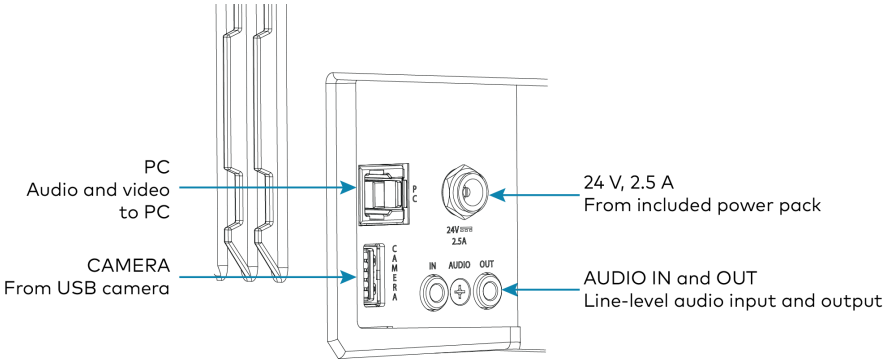

- **PC:** Connect the included USB cable to the PC port and to a USB port on the computer. For optimal results, use a USB 3.0 connection.
- **CAMERA:** Connect a USB camera (sold separately) to the CAMERA port.
- **24 V, 2.5 A:** Connect the power pack to the 24 V, 2.5 A power input and to an AC power outlet.

- **AUDIO IN** and **AUDIO OUT:** The soundbar provides unbalanced, stereo, analog input and output jacks (3.5 mm TRS mini-phone). The AUDIO IN port accommodates an optional line-level audio source which feeds to the internal amplifier and speakers without a volume control or other signal processing. The AUDIO OUT port provides a line-level signal for an optional assistive listening system and carries the same audio signal as the soundbar speakers.

Operation

Status

The front panel status bar illuminates to provide operational information.

- A green status bar indicates the volume level. Raising the volume increases the status bar's illumination. Lowering the volume decreases the status bar's illumination. When the volume = "0", the status bar is unlit.

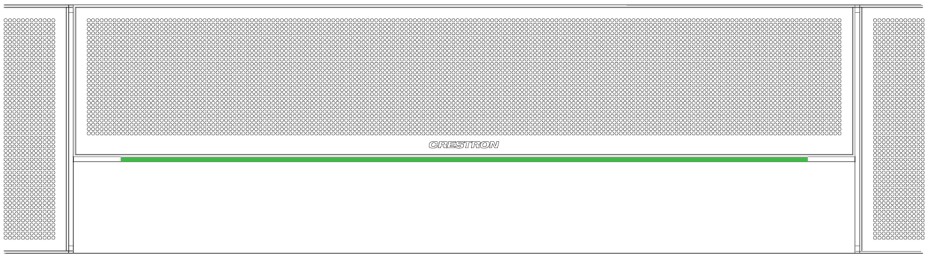

- Muting the microphone and speaker turns the two outer segments of the status bar red.

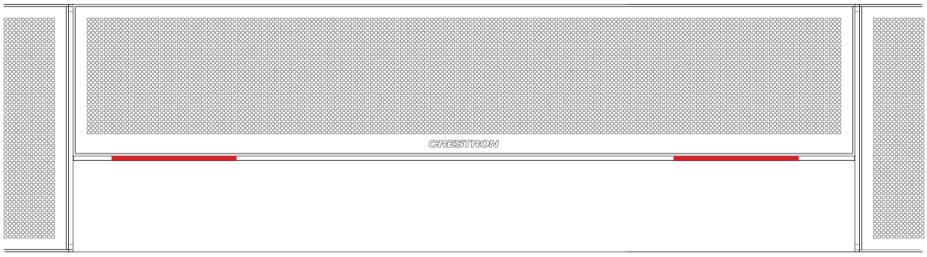

- Muting the microphone turns the center of the status bar red.

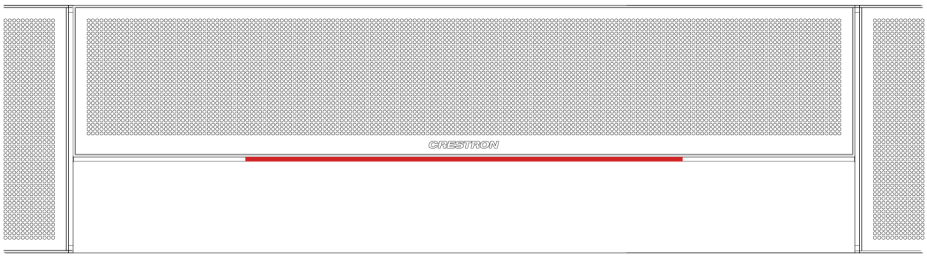

System Control

The soundbar can be used in a BYOD scenario where the soundbar is connected to an end-user's PC over USB. The soundbar will pass bidirectional (mic and speaker) audio and camera (if a camera is connected) across a single USB connection.

UC-SB1-CAM

The Crestron UC Video Conference Smart Soundbar & Camera (UC-SB1-CAM) is a front-of-room device that eliminates the need to install additional microphones, speakers, or cameras in a conference space. Mounted on the wall or placed on a credenza beneath the room display(s), the smart soundbar looks great and sounds even better in a small to medium-sized meeting space.

High-powered stereo speakers, adaptive beamforming microphone, and advanced digital signal processing deliver exceptional full-duplex speakerphone performance with highly intelligible, echo-free voice clarity. A perfect view of the room is achieved through the built-in conferencing camera featuring HD 1080p video resolution, ultra-wide 150° diagonal field of view, and Genius Framing digital autozoom.

Mounting UC-SB1-CAM

In the Box

Qty.	Description
1	UC-SB1-CAM, UC Video Conference Smart Soundbar & Camera (6511281)
	Additional Items
4	Anchor, Drywall, Plastic, 3/8 in. x 1/2 in. (2052565)
1	Cable, USB 3.0, A - B, 6 ft (1.83 m) (2053077)
2	Foot, 2.3 in. x 0.96 in. x 0.15 in., Rubber (2052169)
1	Key, Anchor (4529654)
1	Power Cord, 5 ft 10 in. (1.78 m) (2042043)
1	Power Pack, 24 VDC, 2.5 A, 100-240 VAC (2045873)
4	Screw, 8-AB x 1-1/2 in., Pan Head, Combo (2052567)
1	Template, Overlay (4529513)

The soundbar can be placed on a flat surface or mounted on a wall. The soundbar has the following dimensions.

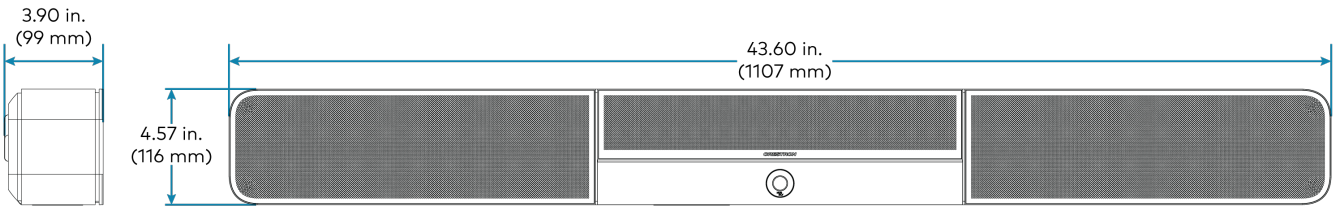

Place on a Flat Surface

If the soundbar is to be placed on a flat surface, attach the included rubber feet to the bottom of the soundbar as shown.

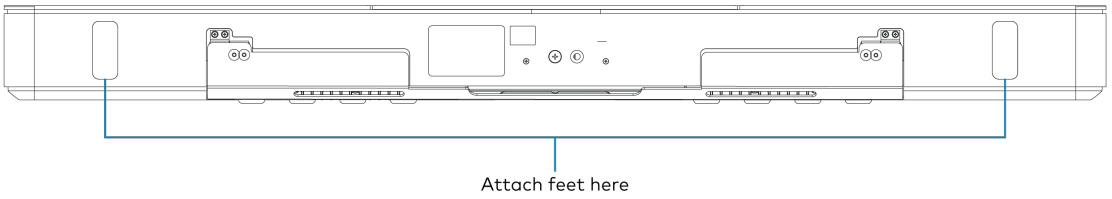

Mount on a Wall

The soundbar includes anchors that are suitable for mounting it on sheetrock walls up to 1/2 in. (13 mm) thickness. Masonry and other materials may require additional installer-supplied mounting hardware.

NOTES:

- For optimal viewing results, the soundbar should be mounted in a location that places the camera approximately 12 in. (305 mm) above the plane of the room's conference table.
- When mounting on a wall beneath a display device, leave 3/4 in. (19 mm) (minimum) clearance above the top of the soundbar. Use the included template to allow for sufficient clearance between the soundbar and display device.

The following tools are required to mount the soundbar:

- Drywall saw (not included)
- Drill with 5/16 in. bit (not included)

A template is included to provide drill hole locations for the included mounting hardware.

1. Attach the template to the desired mounting location with the template's center reference line at the center of the desired location.

   NOTE: Use the center reference hole of the template as a guide to attach the template.

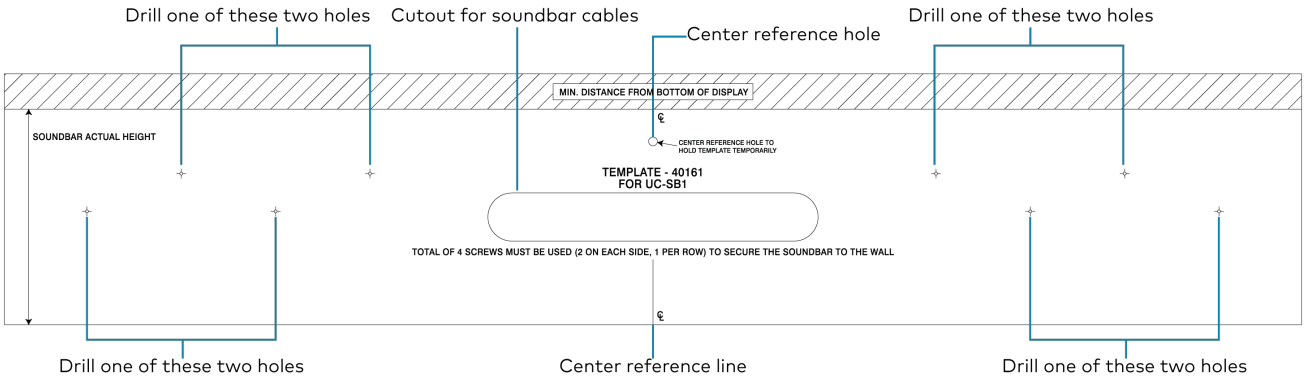

2. Drill two pilot holes on each side of the center reference line as shown in the previous diagram. Each side should have one pilot hole drilled in each row of the template.
3. Use a drywall saw to make a cutout in the wall for the soundbar cables. The cutout in the center of the template provides adequate access for all of the required cabling.
4. Install the four included anchors and screws into the drilled pilot holes.

5. Place the soundbar face down, and pivot the wall bracket away from the soundbar.

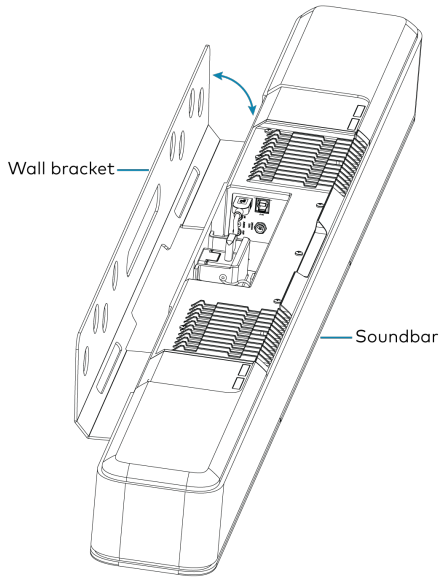

6. Place the wall bracket over the screws, and hand tighten the screws until the wall bracket is secured to the wall.

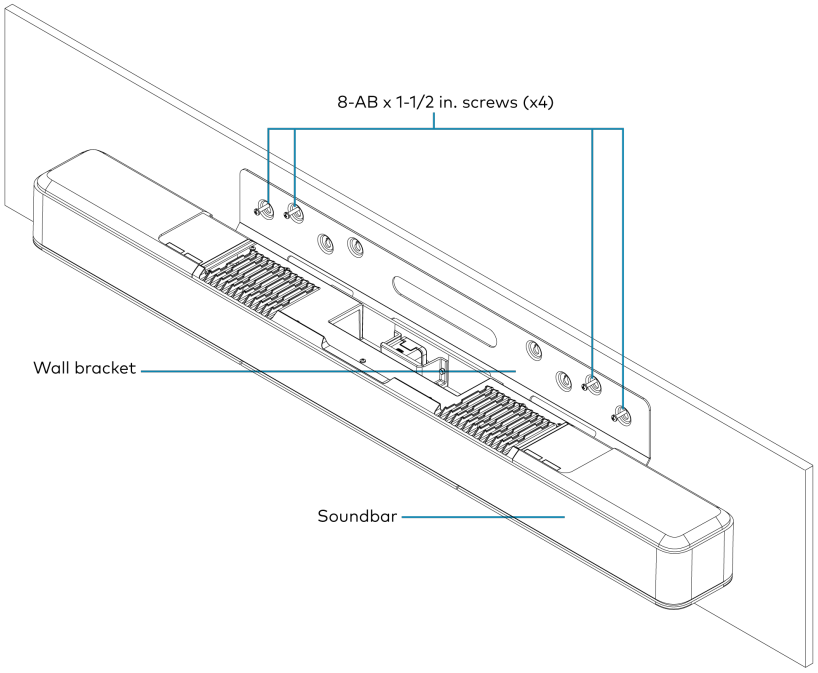

7. Route the cables through the cable cutout.

> **NOTE:** The included power pack's cord is typically routed from the wall opening, through the cable cutout, to the soundbar.

Connect

Make the necessary connections as called out in the following diagram. Connect power last. Once all connections are made, pivot the soundbar up to the wall bracket until the soundbar locks into place.

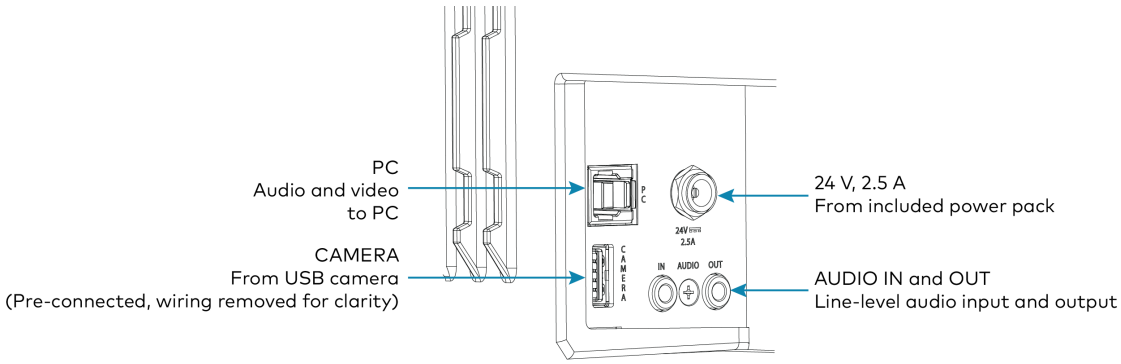

- **PC:** Connect the included USB cable to the PC port and to a USB port on the computer. For optimal results, use a USB 3.0 connection.
- **CAMERA:** The integrated camera is already connected from the factory.
- **24 V, 2.5 A:** Connect the power pack to the 24 V, 2.5 A power input and to an AC power outlet.

- **AUDIO IN** and **AUDIO OUT:** The soundbar provides unbalanced, stereo, analog input and output jacks (3.5 mm TRS mini-phone). The AUDIO IN port accommodates an optional line-level audio source which feeds to the internal amplifier and speakers without a volume control or other signal processing. The AUDIO OUT port provides a line-level signal for an optional assistive listening system and carries the same audio signal as the soundbar speakers.

Operation

Status

The front panel status bar illuminates to provide operational information.

- A green status bar indicates the volume level. Raising the volume increases the status bar's illumination. Lowering the volume decreases the status bar's illumination. When the volume = "0", the status bar is unlit.

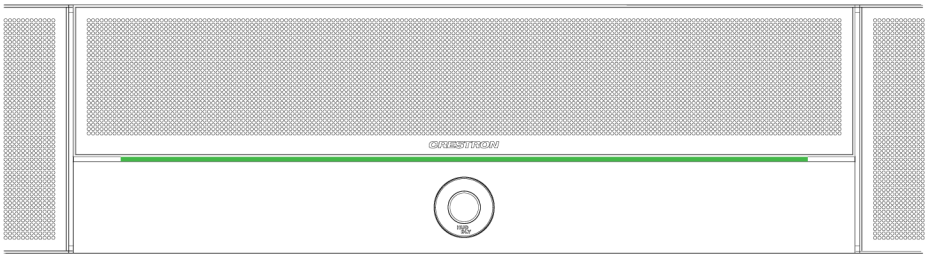

- Muting the microphone and speaker turns the two outer segments of the status bar red.

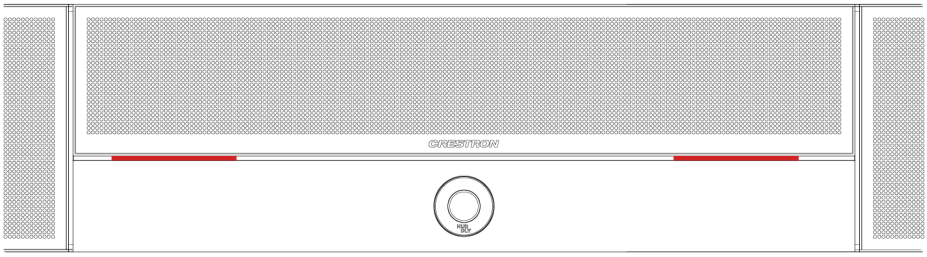

- Muting the microphone turns the center of the status bar red.

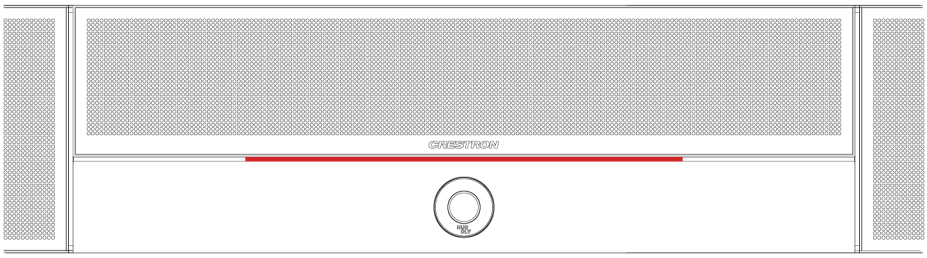

System Control

The soundbar can be used in a BYOD scenario where the soundbar is connected to an end-user's PC over USB. The soundbar will pass both camera and bidirectional (mic and speaker) audio across a single USB connection.

UC-SB-P50 and UC-SB-P50-INDIA

The Crestron UC-SB-P50 and UC-SB-P50-INDIA Jabra® PanaCast® 50 intelligent videobars for Crestron Flex systems combines microphones, speakers, and cameras in one front-of-room device. High-quality speakers and microphones deliver exceptional full-duplex performance. Three built-in conferencing cameras capture the room in panoramic 4K resolution with a seamless 180° horizontal field of view. The Jabra PanaCast 50 is optimized for all leading UC platforms, including both Microsoft Teams Rooms and Zoom Rooms software.

For more information on the Jabra PanaCast 50 video bar for Crestron Flex systems, refer to Jabra PanaCast 50.



Installing UC-SB-P50 and UC-SB-P50-INDIA

Mount the Jabra PanaCast 50 intelligent video bar for Crestron Flex Systems according to its included documentation.

Crestron Flex Care (extended support)

This section provides the following information:

- UC-FLEXCARE
- UC-FLEXCARE-C

UC-FLEXCARE

Crestron Flex Care UC-FLEXCARE Premium Crestron Flex Support for M, MM, and B Series Systems is a subscription support plan available for purchase for terms of one year or longer in connection with the purchase of eligible Crestron Flex conference systems.[1, 2] The term of coverage under an active Crestron Flex Care subscription plan may be extended for a total period of coverage of up to five (5) years from the purchase of the covered Crestron Flex conference system, by purchasing additional subscription terms prior to the expiration of an active Crestron Flex Care subscription plan.[3, 4]

UC-B30-T (for reference purpose only)



Key Features

- 24/7 live remote support with a dedicated Crestron Flex team
- Rapid advance replacement[4]
- Extends Crestron's standard limited warranty coverage period from three (3) years to a period of up to five (5) years, for all Crestron-branded hardware included in the covered Crestron Flex conference system, when continuous Crestron Flex Care coverage is maintained from initial purchase through the extended warranty period[3, 4]
- On site support discount[5]

Crestron Flex Care subscriptions provide the benefits described below for the covered Crestron Flex conference system:

24/7 Live Support with Optional Cloud Connection

Crestron Flex Care guarantees 24/7, year round live remote support with a dedicated Crestron Flex support team.

Extended Hardware Warranty

The purchase of Crestron Flex Care extends Crestron's standard limited warranty coverage period from three (3) years to a period of up to five (5) years, for all Crestron-branded hardware included in the covered Crestron Flex conference system, when continuous Crestron Flex Care coverage is maintained from initial purchase through the extended warranty period.[3, 4]

Rapid Advance Replacement

If a replacement device is needed during the warranty period, Crestron will issue an advance replacement unit before the defective unit is sent back to ensure minimal downtime.[4]

Discounted On-site Support

If on site support is needed, Crestron Flex Care subscribers are offered a discounted, all inclusive daily rate without any hidden fees or added costs for travel and expenses.[5]

Specifications

Crestron Flex Care Services[1]

Support Hours	Live 24/7, year round remote technical support with a dedicated Crestron Flex support team
Advance Replacement	Replacement parts ship prior to the defective unit being shipped to Crestron during the warranty period[3, 4]
Extended Warranty	When Plan coverage is continuously maintained from initial purchase through the extended warranty period, the Crestron Standard Limited Warranty coverage period will be extended from three (3) years to a period of up to five (5) years from the purchase of the Eligible Product, for all Crestron-branded components of the Eligible Products.[1, 4]
On-site Support	Discounted, all-inclusive daily rate without any hidden fees[5]

Notes:

1. Detailed terms and conditions for Crestron Flex Care are posted at www.crestron.com/flexcareterms.
2. Crestron Flex Care subscription support plans must be purchased within 90 days of Crestron's shipment of the covered Crestron Flex conference system.
3. The period of Crestron Flex Care plan coverage may be extended by purchasing additional subscription terms prior to the expiration of an active Crestron Flex Care subscription plan, for a maximum period of coverage of up to five (5) years from Crestron's shipment of the covered Crestron Flex conference system. Crestron Flex Care plans and benefits will expire if continuous coverage is not maintained.
4. The extended warranty applies only to Crestron branded components of the covered Crestron Flex conference system product. Crestron's Standard Limited Warranty applies to all third-party branded components, including the UC Engine and standalone cameras. Warranties and Advance Replacements are subject to the terms of Crestron Standard Limited Warranty and Terms and Conditions of Sale, posted at www.crestron.com/warranty.
5. Subject to the terms of Crestron's On-Site Support program, where available. On-Site Support requires the engagement of an independent Crestron authorized Dealer. To locate a Dealer click the "How to Buy" tab at www.crestron.com.

This product may be purchased from select authorized resellers in the United States, Canada, Australia, New Zealand, and select regions in Europe.

UC-FLEXCARE-C

Crestron Flex Care UC-FLEXCARE-C Premium Crestron Flex Support for New C-Series Systems is a subscription support plan available for purchase for terms of one year or longer in connection with the purchase of eligible Crestron Flex conference systems.[1, 2] The term of coverage under an active Crestron Flex Care subscription plan may be extended for a total period of coverage of up to five (5) years from the purchase of the covered Crestron Flex conference system, by purchasing additional subscription terms prior to the expiration of an active Crestron Flex Care subscription plan.[3, 4]

UC-C100-T (for reference purpose only)



Key Features

- 24/7 live remote support with a dedicated Crestron Flex team
- Rapid advance replacement[4]
- Extends Crestron's standard limited warranty coverage period from three (3) years to a period of up to five (5) years, for all Crestron-branded hardware included in the covered Crestron Flex conference system, when continuous Crestron Flex Care coverage is maintained from initial purchase through the extended warranty period[3, 4]
- On site support discount[5]

Crestron Flex Care subscriptions provide the benefits described below for the covered Crestron Flex conference system:

24/7 Live Support with Optional Cloud Connection

Crestron Flex Care guarantees 24/7, year round live remote support with a dedicated Crestron Flex support team.

Extended Hardware Warranty

The purchase of Crestron Flex Care extends Crestron's standard limited warranty coverage period from three (3) years to a period of up to five (5) years, for all Crestron-branded hardware included in the covered Crestron Flex conference system, when continuous Crestron Flex Care coverage is maintained from initial purchase through the extended warranty period.[3, 4]

Rapid Advance Replacement

If a replacement device is needed during the warranty period, Crestron will issue an advance replacement unit before the defective unit is sent back to ensure minimal downtime.[4]

Discounted On-site Support

If on site support is needed, Crestron Flex Care subscribers are offered a discounted, all inclusive daily rate without any hidden fees or added costs for travel and expenses.[5]

Specifications

Crestron Flex Care Services[1]

Support Hours	Live 24/7, year round remote technical support with a dedicated Crestron Flex support team
Advance Replacement	Replacement parts ship prior to the defective unit being shipped to Crestron during the warranty period[3, 4]
Extended Warranty	When Plan coverage is continuously maintained from initial purchase through the extended warranty period, the Crestron Standard Limited Warranty coverage period will be extended from three (3) years to a period of up to five (5) years from the purchase of the Eligible Product, for all Crestron-branded components of the Eligible Products.[1, 4]
On-site Support	Discounted, all-inclusive daily rate without any hidden fees[5]

Notes:

1. Detailed terms and conditions for Crestron Flex Care are posted at www.crestron.com/flexcareterms.
2. Crestron Flex Care subscription support plans must be purchased within 90 days of Crestron's shipment of the covered Crestron Flex conference system.
3. The period of Crestron Flex Care plan coverage may be extended by purchasing additional subscription terms prior to the expiration of an active Crestron Flex Care subscription plan, for a maximum period of coverage of up to five (5) years from Crestron's shipment of the covered Crestron Flex conference system. Crestron Flex Care plans and benefits will expire if continuous coverage is not maintained.
4. The extended warranty applies only to Crestron branded components of the covered Crestron Flex conference system product. Crestron's Standard Limited Warranty applies to all third-party branded components, including the UC Engine and standalone cameras. Warranties and Advance Replacements are subject to the terms of Crestron Standard Limited Warranty and Terms and Conditions of Sale, posted at www.crestron.com/warranty.
5. Subject to the terms of Crestron's On-Site Support program, where available. On-Site Support requires the engagement of an independent Crestron authorized Dealer. To locate a Dealer click the "How to Buy" tab at www.crestron.com.

This product may be purchased from select authorized resellers in the United States, Canada, Australia, New Zealand, and select regions in Europe.

Discontinued Solutions

- Crestron Flex Room Solutions
- UC-MM30-TA and UC-MM30-TA-I
- Crestron Flex P8/P10 Series Desk Phones and Displays

Crestron Flex Room Solutions

To install the discontinued Crestron Flex conference rooms solutions listed below, follow the respective link to the Quick Start guide for instructions.

Crestron Flex Solutions	Quick Start Guide
• UC-MM30-T-L • UC-MM30-T-L-I	Quick Start: UC-MM30-T-L(-I)
• UC-MM30-Z-L • UC-MM30-Z-L-I	Quick Start: UC-MM30-Z-L(-I)
• UC-MMX30-T-L • UC-MMX30-T-L-I	Quick Start: UC-MMX30-T-L(-I)
• UC-MMX30-Z-L • UC-MMX30-Z-L-I	Quick Start: UC-MMX30-Z-L(-I)
• UC-B30-T-L	Quick Start: UC-B30-T-L
• UC-B30-Z-L	Quick Start: UC-B30-Z-L
• UC-BX30-T-L	Quick Start: UC-BX30-T-L
• UC-BX30-Z-L	Quick Start: UC-BX30-Z-L
• UC-B30-T-L-WM	Quick Start: UC-B30-T-L-WM
• UC-B30-Z-L-WM	Quick Start: UC-B30-Z-L-WM
• UC-BX30-T-L-WM	Quick Start: UC-BX30-T-L-WM
• UC-BX30-Z-L-WM	Quick Start: UC-BX30-Z-L-WM
• UC-B160-T	Quick Start: UC-B160-T
• UC-B160-Z	Quick Start: UC-B160-Z
• UC-M50-T-L	Quick Start: UC-M50-T-L
• UC-M50-Z-L	Quick Start: UC-M50-Z-L
• UC-MX50-T-L	Quick Start: UC-MX50-T-L
• UC-MX50-Z-L	Quick Start: UC-MX50-Z-L
• UC-C160-T	Quick Start: UC-C160-T
• UC-C160-Z	Quick Start: UC-C160-Z
• UC-C100-T-L	Quick Start: UC-C100-T-L
• UC-C100-Z-L	Quick Start: UC-C100-Z-L
• UC-C100-T-L-WM	Quick Start: UC-C100-T-L-WM
• UC-C100-Z-L-WM	Quick Start: UC-C100-Z-L-WM

Crestron Flex Solutions	Quick Start Guide
• UC-CX100-T-L	Quick Start: UC-CX100-T-L
• UC-CX100-Z-L	Quick Start: UC-CX100-Z-L
• UC-CX100-T-L-WM	Quick Start: UC-CX100-T-L-WM
• UC-CX100-Z-L-WM	Quick Start: UC-CX100-Z-L-WM
• UC-FCM-T • UC-FCM-Z • UC-FCM-U	Quick Start: UC-FCM Series
• UC-FCB-T • UC-FCB-Z	Quick Start: UC-FCB Series
• UC-FCMX-T • UC-FCMX-Z	Quick Start: UC-FCMX Series

UC-MM30-TA and UC-MM30-TA-I

UC-MM30-TA and UC-MM30-TA-I Features

The Crestron Flex UC-MM30-TA and UC-MM30-TA-I system provides an audio conference room solution for use with the Microsoft Teams Rooms intelligent communications platform. It features a Crestron Flex tabletop conference device (UC-2).



Included Components

	UC-MM30-TA	UC-MM30-TA-I
UC-2 Mini Tabletop Conference Device	✔	✔

To view the specifications and dimensions of the included components of the selected kit, refer to Specifications and Dimension Drawings.

Key Features

- Tabletop conferencing solution for Microsoft Teams Rooms environment
- Native Microsoft Teams Rooms touch screen UI provides a consistent user experience with simple operation and one-touch meeting joins
- Network management and provisioning and system alerts through the XiO Cloud service
- Dual-band Wi-Fi® connection

- Easy to specify and install — no custom design, programming, or software installation required
- Enterprise-grade security — connects and communicates securely over any enterprise or SMB network
- Premium-level support with Crestron Flex Care (optional)

Native Microsoft Teams Rooms Experience

The conferencing solution brings the full Microsoft Teams Rooms UC experience to any meeting space in an enterprise or SMB facility.

Intuitive User Interface with Impressive Audio

With a large 7 in. HD color touch screen and an integrated AEC-enabled USB speakerphone that affords full-duplex wideband audio performance, the mini Crestron Flex Tabletop Conference device provides a superior conferencing and collaboration experience for meeting rooms, huddle spaces, and executive offices.

Enterprise-Grade Security

Crestron Flex is an enterprise-grade solution, engineered in partnership with Microsoft to integrate seamlessly into any Microsoft Teams Rooms software deployment. Crestron Flex is ideally equipped for mass deployment throughout any sized corporate, university, medical, military, or government facility.

Easy Provisioning and Device Management

The XiO Cloud service is an IoT cloud based provisioning service (available separately) that enables installers and IT managers to deploy and manage thousands of devices easily. The XiO Cloud service allows for system alerts, network management and provisioning. System updates are controlled by Windows software update.

Visit www.crestron.com/xiocloud for additional information.

Premium-Level Support

Crestron Flex Care is an optional subscription service that can be renewed annually for up to 5 years from the ship date. It includes 24/7 live remote technical support, an extended fiveyear warranty on Crestron® hardware, expedited advance replacements, and a discounted rate for on-site support.

Visit www.crestron.com/flexcare for detailed terms and conditions and additional information.

Deployment Resources

View the Pre-Deployment Checklist on page 95 to help plan your Crestron Flex installation.

UC-MM30-TA and UC-MM30-TA-I Installation

Minimum Requirement

Ensure that the below requirements are met prior to setting up the system.

A Microsoft Teams Rooms provisioned account (not included).

In the Box

Qty.	Description
1	Flex MM Tabletop Conference Device, Microsoft Teams audio (6510609 or 6511099)
	Additional Items
1	1 PoE+ injector (2055605)
2	Cable, CAT5e, RJ-45 - RJ-45, 11.8 ft (3.6 m) (2056204)
1	Cable, USB 2.0, A - Micro B, 5.8 ft (1.8 m) (2055579)

Connections

Make device connections as shown below.

> **NOTE:** A laptop connection to the conference device is optional. When connected, the conference device acts as a speakerphone.

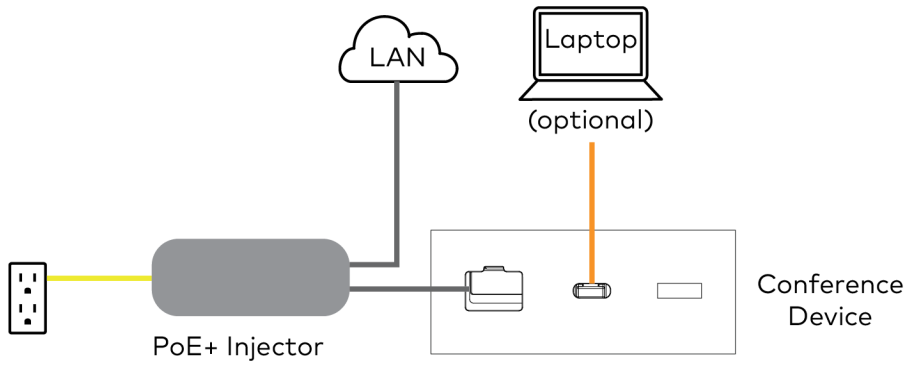

CAT5e or better
11.8 ft CAT5e cable (x2)

USB
5.8 ft USB 2.0 A - Micro-B cable

Power
PoE+ Injector

Sign Into the Microsoft Teams Service

When prompted by the tabletop conference device, tap **Sign In** at the bottom of the screen and follow the displayed instructions to sign into the Microsoft Teams service.

Configure the Device

Use the on-screen instructions to configure the device. The default password to access the administrator settings is "admin." Choose a new password when prompted.

Factory Reset

A factory reset may be performed when troubleshooting the conference device.

To perform a factory reset on the conference device:

1. Power cycle the device by disconnecting and reconnecting the CAT5e cable from the conference device.
2. When the device powers on and the LEDs flash green, tap the button below the Crestron® logo 10 times. A factory reset confirmation screen appears.

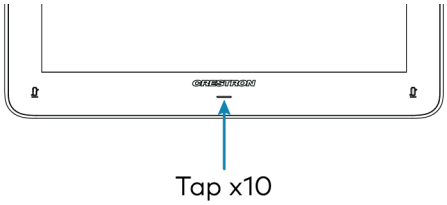

3. Tap one of the mute buttons to move the selector on the factory reset confirmation screen to **Yes**. Tap the button below the Crestron logo to confirm the factory reset.

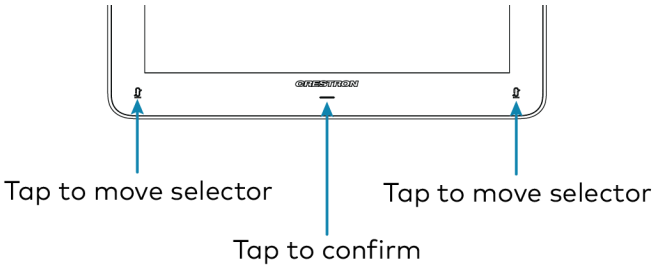

4. The device will reboot.

NCC警语

「取得審驗證明之低功率射頻器材，非經核准，公司、商號或使用者均不得擅自變更頻率、加大功率或變更原設計之特性及功能。低功率射頻器材之使用不得影響飛航安全及干擾合法通信；經發現有干擾現象時，應立即停用，並改善至無干擾時方得繼續使用。前述合法通信，指依電信管理法規定作業之無線電通信。低功率射頻器材須忍受合法通信或工業、科學及醫療用電波輻射性電機設備之干擾。」
應避免影響附近雷達系統之操作。
高增益指向性天線只得應於固定式點對點系統。
[使用過度恐傷害视力**]**
a、使用**30**分鐘請休息**10**分鐘。
b、未滿**2**歲幼兒不看營幕,**2**歲以上每天看餐幕不要超過1小時。

NCC Regulatory Information
Support Frequency Bands and Power:
BT< 8 dBm;
WLAN 2412-2462 MHz < 25 dBm;
WLAN 5150-5825 MHz < 18 dBm;

Crestron Flex P8/P10 Series Desk Phones and Displays

UC-P8 and UC-P10 Series Displays for Microsoft Teams Software

The Crestron Flex UC-P8 and UC-P10 series display provides a premium video collaboration solution for use with the Microsoft Teams® display intelligent communications platform. It offers Full HD quality video and audio calling, capability to view and zoom the shared content, and full-duplex hands-free speakerphone capability in an elegant desktop design. It features a large 10 in. color touch screen display, built-in Full HD camera with privacy shutter, and wired or Bluetooth® enabled headset support. Each display can be synced with a Microsoft Teams® account, with contacts, schedules, voicemails, and other preference settings appearing on the display's touch screen.

UC-P10-TD(-I)



UC-P8-TD(-I)



Installing UC-P8 and UC-P10 Series Display

The UC-P8 and UC-P10 Series Display can be placed on any flat surface or mounted on a wall using the UC-AUDIO-POD-TTMK tabletop mounting kit (sold separately). For details, refer to:

- UC-P8 Series Displays installation and connections: Quick Start: UC-P8-TD and UC-P8-TD-I
- UC-P10 Series Displays installation and connections: Quick Start: UC-P0-TD and UC-P10-TD-I

Configuring UC-P8 and UC-P10 Series Display

To configure the the UC-P8 and UC-P10 Series Display, refer to Product Manual: Crestron Flex UC-P8 and UC-P10 Series Desk Phones and Displays for Microsoft Teams Software.

UC-P8 and UC-P10 Series Desk Phones for Microsoft Teams Software

The Crestron Flex UC-P8 and UC-P10 series audio and video desk phones provide premium video collaboration solution for use with the Microsoft Teams intelligent communications platform. It offers Full HD quality video and audio calling, capability to view and zoom the shared content, and full-duplex hands-free speakerphone capability in an elegant desktop design. It features a large 10 in. color touch screen display, built-in Full HD camera with privacy shutter, hearing aid compatible handset, and wired or Bluetooth® enabled headset support. Each phone can be synced with a Microsoft Teams account, with contacts, schedules, voicemails, and other preference settings appearing on the phone's touch screen.

UC-P10 Series



UC-P8 Series



Installing UC-P8 and UC-P10 Series Desk Phones

The UC-P8 and UC-P10 series audio and video desk phones can be placed on any flat surface or mounted on a wall using the UC-AUDIO-POD-TTMK tabletop mounting kit (sold separately). For details, refer to:

- UC-P8-T-HS(-I) series desk phones installation and connections: Quick Start: UC-P8-T-HS, and UC-P8-T-HS-I
- UC-P8-T-C-HS(-I) series desk phones installation and connections: Quick Start: UC-P8-T-C-HS, and UC-P8-T-C-HS-I
- UC-P10-T-HS(-I) series desk phones installation and connections: Quick Start: UC-P10-T-C-HS and UC-P10-T-C-HS-I
- UC-P10-T-C-HS(-I) series desk phones installation and connections: Quick Start: UC-P10-T-C-HS and UC-P10-T-C-HS-I

Configuring UC-P8 and UC-P10 Series Desk Phones

To configure the the UC-P8 and UC-P10 series desk phones, refer to Product Manual: Crestron Flex UC-P8 and UC-P10 Series Desk Phones and Displays for Microsoft Teams Software.

Troubleshooting and Known Issues

Refer to the following online help articles for troubleshooting and common issues:

- Crestron Flex Room Solutions
- Crestron Mercury Conferencing Device
- Other Unified Communications Devices

Resources

The following resources are provided for the Crestron Flex conferencing solutions.

> **NOTE:** You may need to provide your Crestron.com web account credentials when prompted to access some of the following resources.

Crestron Support

- Crestron True Blue Support
- Crestron Resource Library
- Crestron Online Help (OLH)

Crestron Training Institute (CTI) Portal

The series of courses that offer successful deployment of Crestron Flex solutions. For details, refer to Crestron Flex training courses.

Security Reference Guides

- Crestron Flex UC-ENGINE
- Crestron Flex Phones
- Crestron Flex Care Cloud Connect Service
- XiO Cloud® Provisioning and Management Service
- TS-70 and TSW-70 Series Touch Screens

Configuration Guides for Crestron Mercury and Mercury X

- Secure SIP Endpoint with Cisco® Unified Communications Manager 11.0 for CCS-UC-1
- Secure SIP Endpoint with Avaya Aura® 7.0 System for CCS-UC-1
- Crestron Mercury Tabletop Conference System (CCS-UC-1 & CCS-UC-1-X) TLS Secure SIP Endpoint with Avaya Aura® 8.0 Communication Manager
- Crestron Mercury® Tabletop Conference System (CCS-UC-1 & CCS-UC-1-X) Non Secure SIP Endpoint with Cisco® 12.5 Unified Communication Manager (CUCM)
- Crestron Mercury Tabletop Conference System with Microsoft® Skype® for Business for CCS-UC-1
- SIP Endpoint with Cisco® Unified Communications Manager 10.5 for CCS-UC-1
- Secure SIP Endpoint with Cisco® Unified Communications Manager 10.5 for CCS-UC-1
- SIP Endpoint with Mitel® MiVoice Business System 8.0PR3 for CCS-UC-1
- SIP Endpoint with ShoreTel® Connect System 21.80.7840.0 for CCS-UC-1
- SIP Endpoint with Avaya Aura® 6.3 System for CCS-UC-1
- SIP Endpoint with Avaya Aura® 7.0 System for CCS-UC-1

Product Information (Compliance) Sheet

- Product Information: UC M, MM, B, C, and R Series KIT
- Product Information: UC BRKT Series
- Product Information: UC-ENGINE-BRKT Series Upgrade KIT
- Product Information: UC-2-T-V and UC-2-T-V-I
- Product Information: UC-2-Z and UC-2-Z-I
- Product Information: CCS-UC-1-X
- Product Information: UC-PR
- Product Information: UC-BRKT-250-P-T-ASSY
- Product Information: UC-BRKT-200-S-T-ASSY
- Product Information: UC-BRKT-260-P-T-ASSY
- Product Information: UC-BRKT-260-P-Z-ASSY
- Product Information: UC-BRKT-250-P-Z-ASSY
- Product Information: UC-BRKT-200-S-Z-ASSY
- Product Information: UC-SB1-CAM-FLEX
- Product Information: ADPT-USB3.0-GBENET
- Product Information: CCS-UCA-MIC
- Product Information: UCA-PWE-UC-2/UC-P8/P10
- Product Information: UCA-RMK-1U
- Product Information: UC-SB1
- Product Information: UC-SB1-CAM
- Product Information: UCA-SMK-UC2 and UCA-SMKR-UC2-3

Product Certificates

To search for product certificates, refer to support.crestron.com/app/certificates.

Programmer and Developer Resources

- help.crestron.com: Provides help files for Crestron programming tools such as SIMPL, SIMPL#, and Crestron Toolbox™ software
- developer.crestron.com: Provides developer documentation for Crestron APIs, SDKs, and other development tools

Crestron Electronics, Inc.
15 Volvo Drive, Rockleigh, NJ 07647
Tel: 888.CRESTRON
Fax: 201.767.7656
www.crestron.com

Product Manual — Doc. 9132L
01/02/25
Specifications subject to
change without notice.