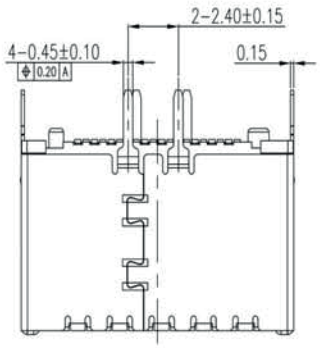


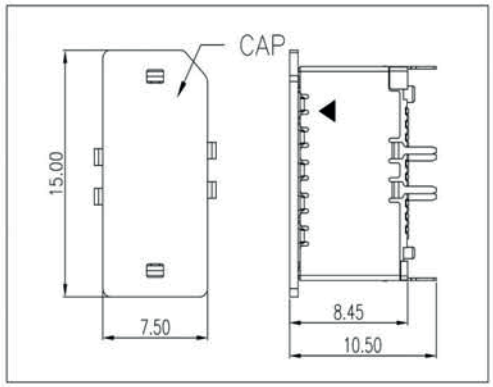


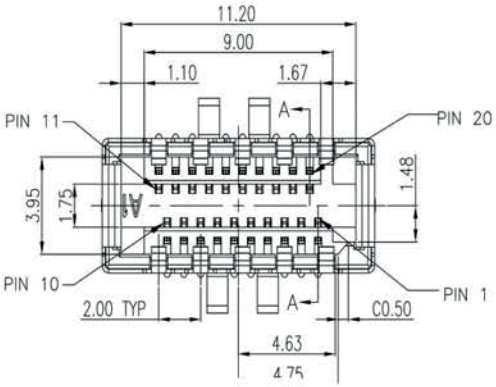


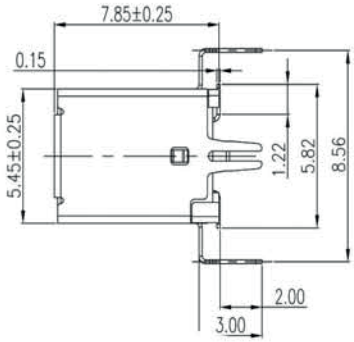


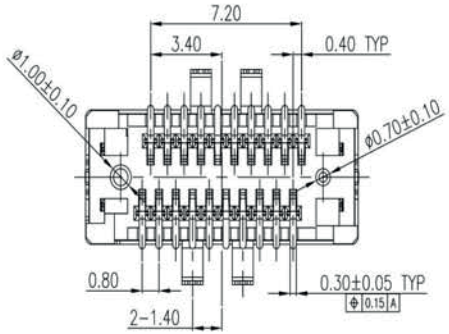


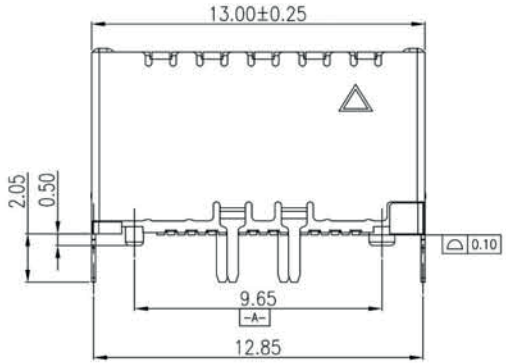


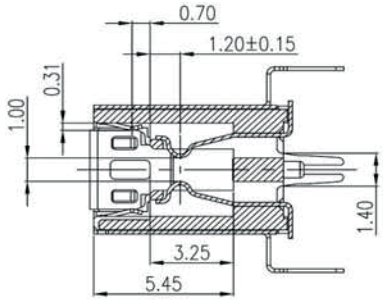


SECTION A-A
SCALE 1:1

## NOTES:

1. Material:
   Insulator: LCP, UL 94V-0 Rated.
   Color: Black.
   CAP: LCP, UL 94V-0 Rated.
   Color: Black.
   Contact: Phosphor Bronze.
   Plating: Gold Plating over Nickel 50u" Min. on Contact Area;
   Tin 80u" Min. Plating over Nickel 50u" Min. on Solder Tail.
   Shell: Stainless Steel.
   Plating: Tin 80u" Min. Plating over Nickel 50u" Min.
2. Mechanical:
   Insertion Force: 35N Max.
   Withdrawal Force: 15N Min.
   Durability: 50Cycles.
3. Electrical Specification:
   Current Rating: 0.5A per Contact.
   LLCR: 50mΩ per Pin Max.
   LLCR 10mΩ Max Change of all Pins.
   Insulation Resistance: 100MΩ Min.
   Dielectric Withstanding Voltage: 300V AC R.M.S.
4. Environmental:
   Operating Temperature: -55°C to +85°C.
   Soldering Temperature: 265°C±5°C for 10Secounds Max.
   If EMI Shell Solder Lead is Connected to The Adjacdat GND Pin
   Viatrace, Need to Be Isolated by Solder Resist.

DELOCK
we move the world

| | | | |
|---|---|---|---|
| Date | 2024 /11 / 28 | Title: | USB Type-E Key A 20 pin female vertical for SMT solder mounting |
| Unit | mm | Item no. | 67193 |
| Projection | sketch | | |
| Rev | A | File No. | |