RoHS

REV.	DESCRIPTION	DATE
A	AUDIO ANALOG 2 PAIR CABLE	JAN 7, 2023
B		

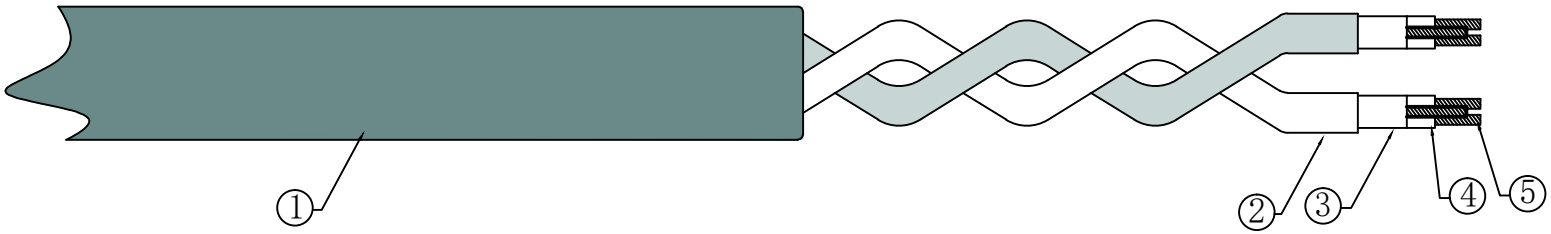

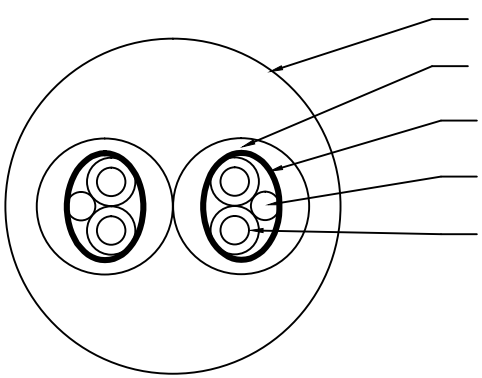

OUTER JACKET:LSZH OD φ7.0±0.15MM

INNER JACKET:LSZH OD φ2.86±0.15MM

SHIELDING: 8*0.025MM-AL COVERAGE 100%

DRAIN WIRE: 7/0.20TC

SIGNAL WIRE: 7/0.20TC PEφ1.02

NO.	
①	OUTER JACKET
②	INNER JACKET
③	ALUMINIUM FOIL
④	PE
⑤	INNER CONDUCTOR

ITEM NO.	LENGTH

TITLE	AUDIO ANALOG 2 PAIR		
DRAWING NO		DRAWER	001
REV.	A	CHECKED	
		APPROVED	

VIVO LINK