AW2723DF Outline Dimension
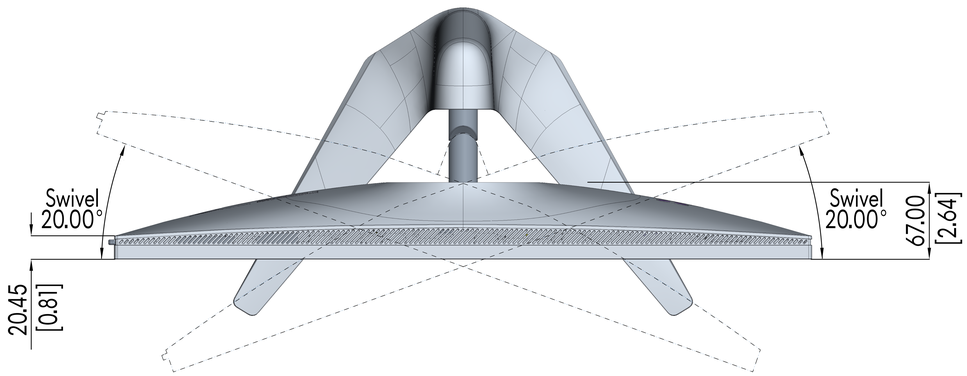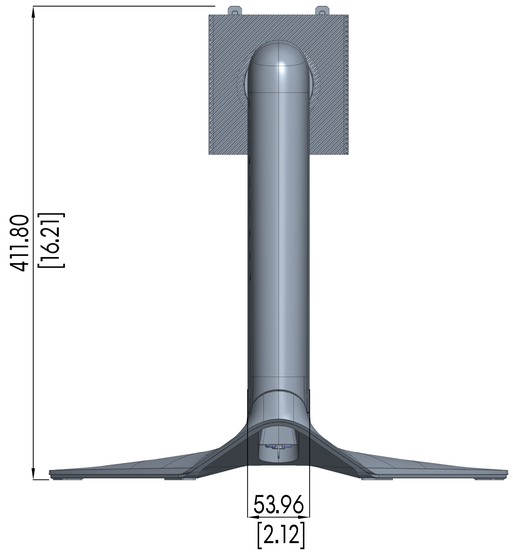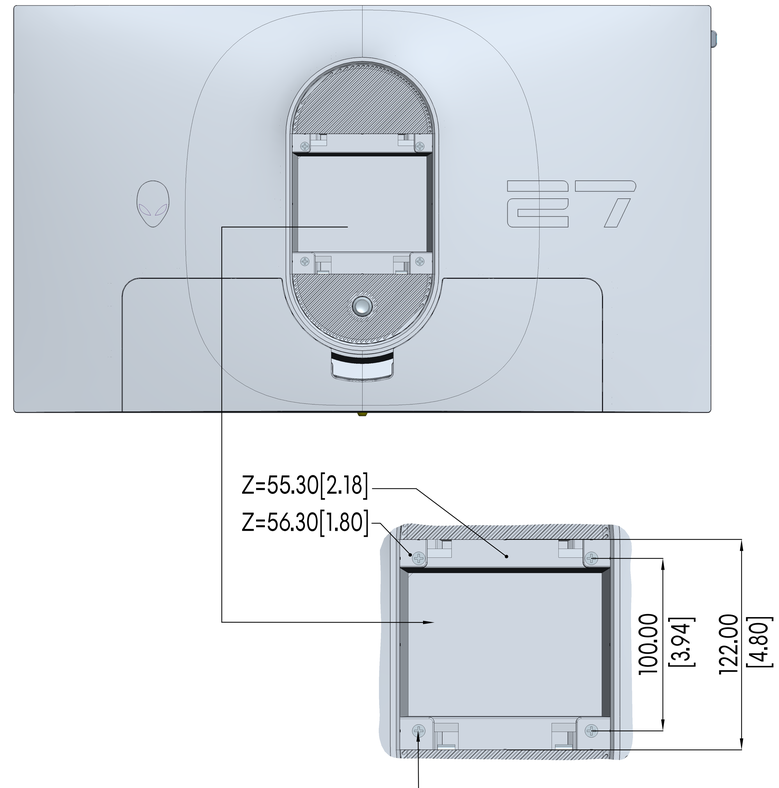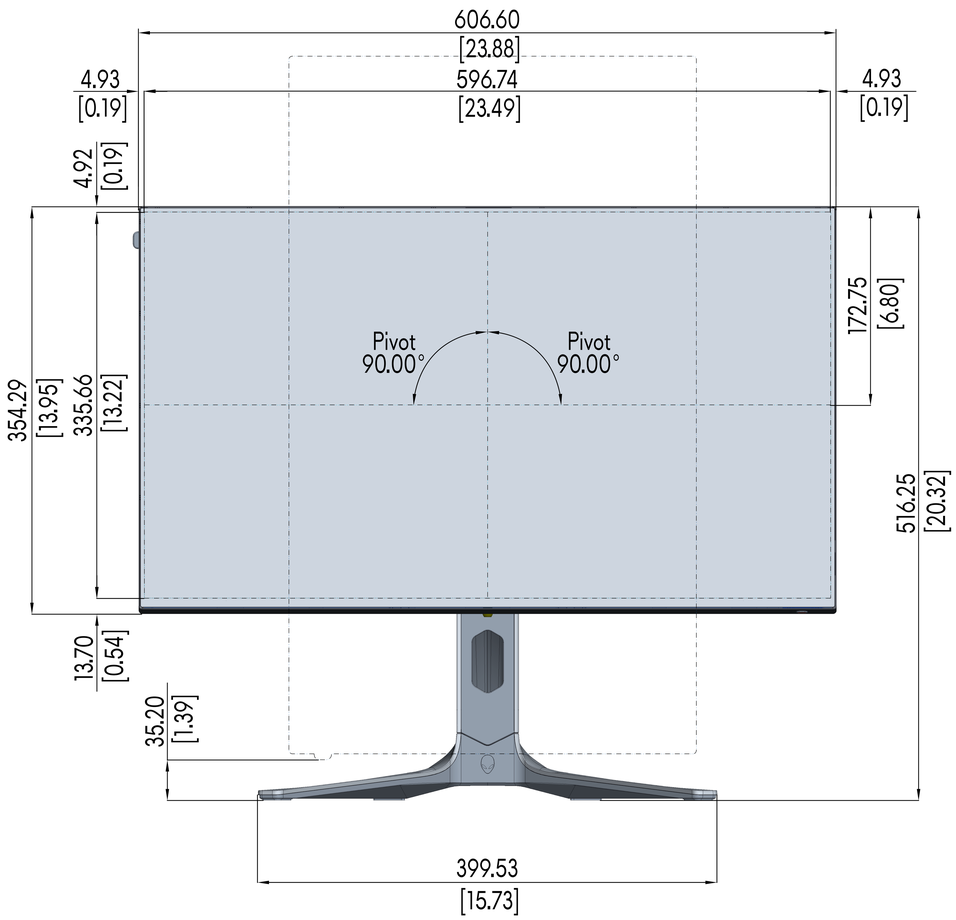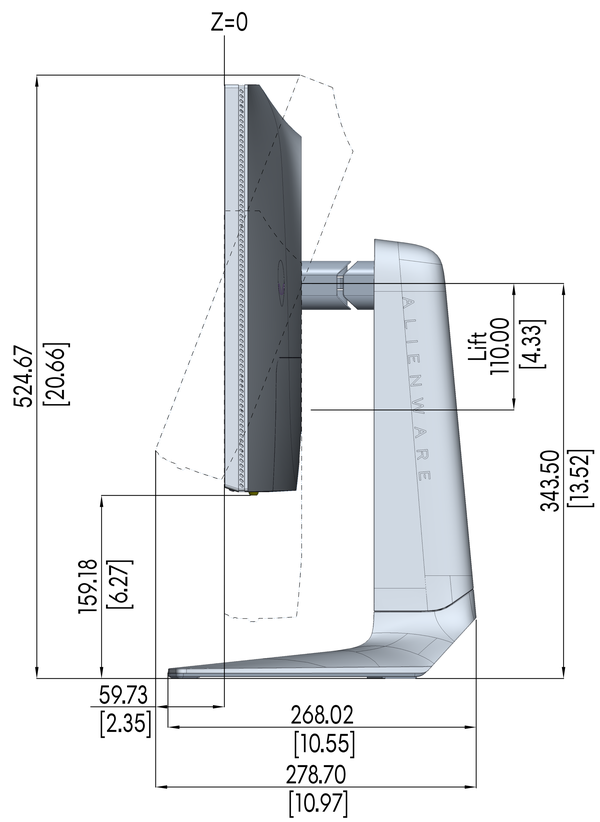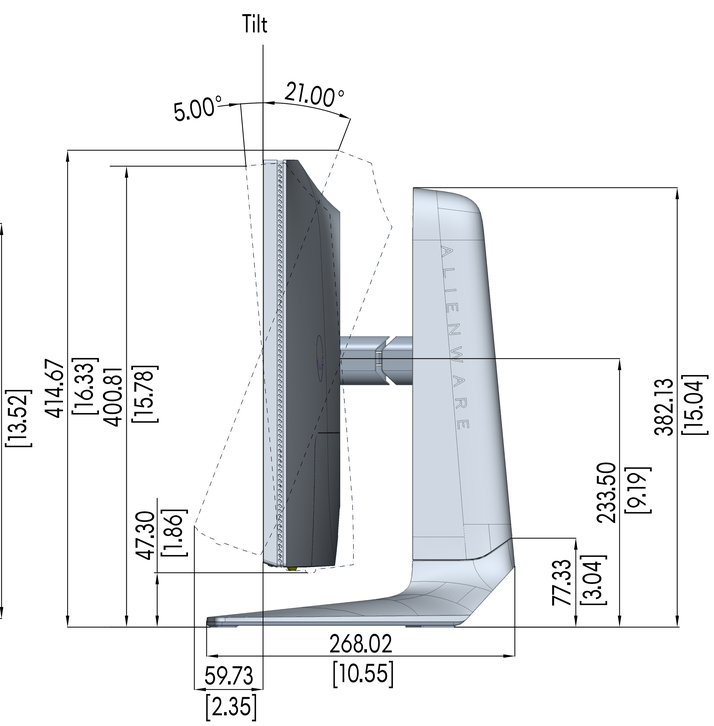
Unit : mm(inch)
Dimension : Nominal
Drawing : Not to scale